STUDENT TEXT ABR30533-1

Computer Systems Department

SITUATION DISPLAY GENERATOR ELEMENT

C702-416L-ST

24 April 1967

AIR TRAINING COMMAND

Keesler Technical Training Center
Keesler Air Force Base, Mississippi

Designed For ATC Course Use

Computer Systems Department
KTTC, Mississippi

Student Text
25 April 1967

DISPLAY SYSTEM

SITUATION DISPLAY INDICATOR ELEMENT

MATERIALS REQUIRED

Engineering Data Books

1. Theory of operation - display system Volumes 1 and 2
2. Schematics display system Volume 2
3. Display maintenance handbooks 07, Volumes 1 and 2

This Student Study material has been reproduced from materials printed by IBM Corporation, Kingston, New York.

TABLE OF CONTENTS

Display System

I. General Information

A. Function of Situation Display Elements

1. The SD elements of the Display System present a rapidly changing picture of the present and past air-defense tactical situation. The presentation is made in the form of plan-position indicating maps of the air situation or selected portions of it. Information pertaining to radar tracks, flight plans, geographical boundaries and locations, weapons, sites, etc., appear on the viewing screen of special CRT's as letters, numbers, vectors, and special symbols. The letters and numerals are used to assemble short, encoded messages that are posted adjacent to particular points and targets in the form of vectors, giving identification, location, and other desription information.

B. SD Information

1. The SD element receives its information in the form of binary words from the Central Computer System through the necessary buffer devices, specifically, the TD and RD drums. The drums act as a time buffer between the rapid operation of the Central Computer System and the relatively slow SD elements.

2. The TD (track data) drum is capable of storing 1, 536 8-word messages whereas the RD (radar data) drum can store 18, 432 messages at any given time. Both of these drums are read by the SDGE approximately every 2. 6 seconds.in the AN/FSQ-7. To read all of the TD drum requires 1. 6 seconds; to read all of the RD drum requires 1 second. In the AN/FSQ-8, there is no RD drum and a TD drum is substituted for it. Hence in the AN/FSQ-8, an SD cycle is 3. 2 seconds.

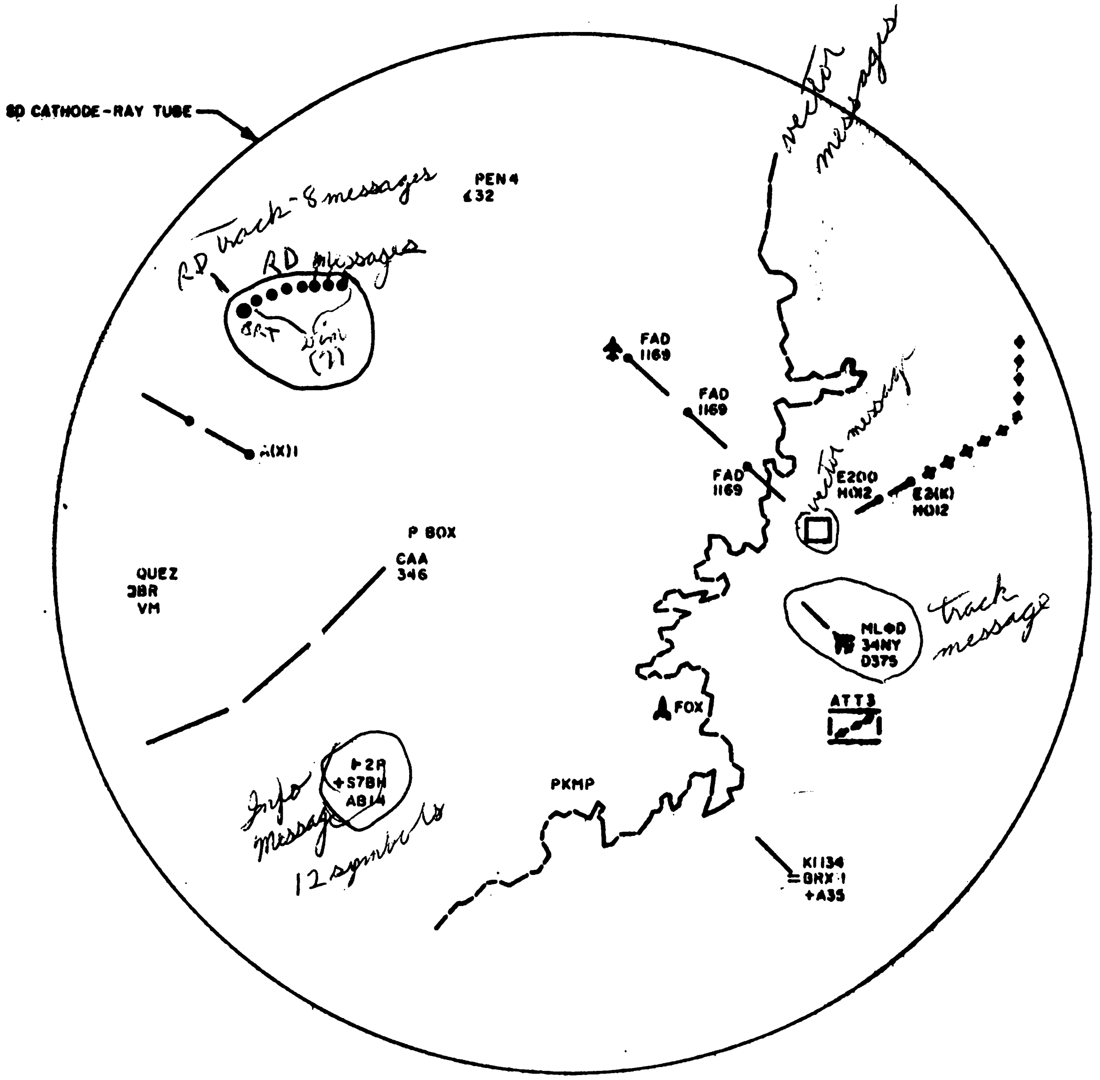

NOTE:
SYMBOLS IN RD MESSAGES WHICH **APPEAR LARGER THAN** NORMAL ARE SHOWN IN THIS **MANNER** TO **INDICATE** THAT THEY ARE DISPLAYED BRIGHTLY.

Figure 1—27. Representative Situation Display

C. SD Message Presentation

Refer Fig. 1-27
Page 0020

1. The types of messages displayed by the SD element are separated into three main categories in the AN/FSQ-7, or two main types in the AN/FSQ-8. The first type, radar messages, * is used to indicate present and past radar returns. The second, vector messages, is used to indicate flight plans, geographical boundaries, and other instances where lines and/or designs are to be shown. The third type is the tabular message. This type of information presentation is used to indicate cities, aircraft, airports, and missile or antiaircraft bases.

*Not applicable to AN/FSQ-8

D. Situation Display Elements

1. The SD elements contain the SDGE and the SDIE. The SDGE is a duplex element that receives digital information signals from the Drum System and converts them into voltages that can be used by the SDIE. This element also receives the timing and control signals from the Drum System.

2. The SDIE SDIS contains all the ~~SDIS's~~ SDIE's. These sections all operate alike and are placed at various SD consoles for the assigned operators. Each SDIS is simplex equipment that contains the SD CRT and its associated circuits. They receive the signals from the SDGE and change them into the visual information displayed on the viewing screen.

SDIS = Any SD Console

SDIE = All SD Consoles taken as 1 logical block.

3. There are two types of signal flow between the SDGE and the SDIE. One is used to select the characters in the pattern, place the characters in the proper pattern, and then orient the pattern in the correct position on the viewing screen. The second type is used to control the operation in the SDIE. Figure 1-32 is a block diagram of the SD elements showing the SDGE, the SDIE, and the accompanying signal flow.

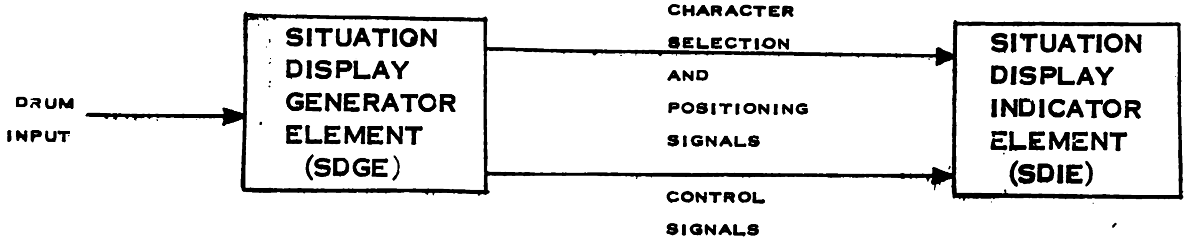

FIGURE 1-32 SD ELEMENTS, BLOCK DIAGRAM

E. SD Signal Flow and Timing

1. Figure 1-33 is a functional block diagram of the SD element, showing information flow from the drums to the SDIE. The drums send to the generator element the binary information to the displayed, along with timing pulses, WOW pulses, and other control signals.

   The generator converts these binary signals into the necessary digital and analog voltages. These voltages are distributed to the various consoles by the cables and distribution boxes of the distribution element. Although all signals are wired through all boxes, only those signals necessary to a specific console's tactical assignment are wired in to that console.

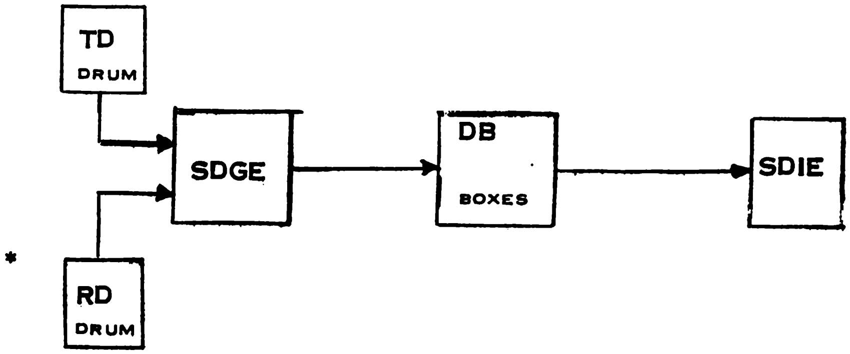

*NOT APPLICABLE TO AN FSQ-8, PART OF AN FSQ-7 ONLY.

FIGURE 1-33 SD ELEMENT, FUNCTIONAL BLOCK DIAGRAM

F. SDIS Selection

1. Each of the SD messages sent to the SD elements from the Central Computer is given a category (CAT) and a display assignment bit (DAB). These CAT's and DAB's select which SDIS's in the SD consoles will be intensified for the particular message. If each SDIS were intensified for each message, the resulting display would be an intermingling of many messages that would be hopelessly unintelligible. This chaotic condition would result because all messages are sent to each SDIS; therefore, some such device as that described above would be necessary to assure discrete displays on the viewing screen.

2. Message Categories (CATS) - Each TD message is assigned one of 32 CAT numbers on the basis of source, subject, tactical significance, etc. This assignment is made by the Central Computer, when the message is made up and sent to the display system.

   There are 8 RD CATS which are made up in the display system to identify the means whereby the radar return was detected.

3. Display Assignment Bit (DAB) - The Central Computer can assign any one of 90 DAB's to each message when it wishes to communicate with individual display consoles.

4. It is by means of CAT and DAB signals that a console can be selected to display a particular message. This display of different CAT's or DAB's are controlled by 15 switches at the console. With the use these switches, the console operator may select all or some of the signals assigned to that SDIS. This is done to give the operator partial control over the messages that are displayed.

   Some CAT or DAB messages are not sent through a switch so that the operator has no control over their display. These are called forced displays and will always be displayed at the SDIS regardless of what action the operator takes at the controls.

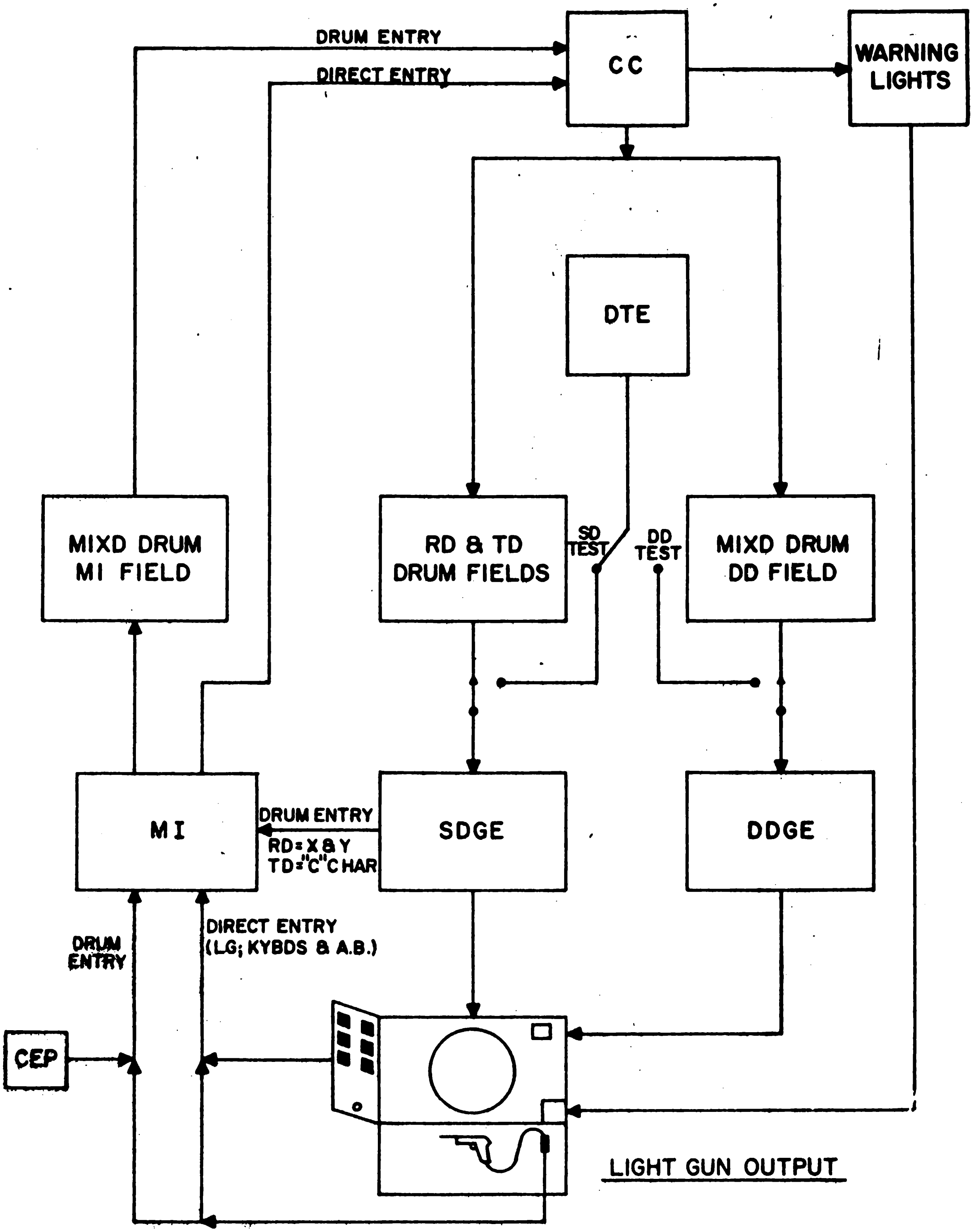
DRUM ENTRY
DIRECT ENTRY
CC
WARNING LIGHTS
DTE
MIXD DRUM MI FIELD
RD & TD DRUM FIELDS
SD TEST
DD TEST
MIXD DRUM DD FIELD
MI
DRUM ENTRY
RD=X & Y
TD="C" CHAR
SDGE
DDGE
DRUM ENTRY
DIRECT ENTRY (LG; KYBDS & A.B.)
CEP
LIGHT GUN OUTPUT

FIGURE 1

5. Correlation between CAT's and DAB's - CAT signals are a means whereby central computer can communicate with a group of display consoles while a DAB signal is usually sent to one console. This means of selecting consoles is similar to talking to a group of persons on a party line as compared to conversation on a private telephone line.

G. Relationship of SDIE to Display System, Drum System, Computer System, and Input System.

<u>Note</u>: Refer to Fig. 1 page0060

1. Computer System
    a. Computes radar information and composes messages for TD and RD Drums.

2. Drum System (TD and RD Drums).
    a. Receives messages from computer.
    b. Information read from Drums at set rate.
        1. Read one message and allow time for message to be displayed before reading next message.
        2. Messages sent to SDGE.

3. S. D. G. E.
    a. Receives messages from TD and RD Drums.
    b. Stores message.
    c. Processes message.
    d. Generate signals necessary to display message.
    e. Signals sent to SD Consoles by way of Signal Distribution Element.

4. SD Console
    a. Contains SD Tube capable of displaying characters and vectors.

b. Contains circuitry to furnish necessary voltages for tube operation, and provide means of aligning SD Tube.

c. Contains controls allowing message selection and area selection.

5. Input System (Manual Data Inputs)

a. Means of communicating with the computer from a display console.

b. Request information or action Info is inserted in Keyboards at SD Console. This information is sent to MDI Direct Entry.

c. Info from MDI Direct Entry sent to computer.

d. Info from MDI Drum Entry sent to MI Drum and to computer.

H. Supporting Components of Display System.

1. The SD, auxiliary, and Command Post consoles, and the PRRE have some controls, indicators, and operating devices in common. Such devices as audible alarms, communication equipment, MI devices, unit status switches, and warning lights are located at more than one operating position. The operation of each is basically the same, no matter where it may be located in the system.

2. Audible Alarms and Warning Lights

a. By means of the Warning Light System, the Central Computer can light lamps or sound audible alarms at the display consoles to alert operators to a situation requiring their attention. With certain exceptions, there are provisions for as many as 20 warning lights at an auxiliary display console or 10 in each input data-selection control panel at an SD console.

3. SD Console

   a. Most of the SD CRT's in the Display System are in SD consoles. The consoles are simplex with the exception of certain consoles (as SEE ALLS and others) associated with maintenance monitoring. Most of the SD consoles include a DD CRT. In addition, the SD consoles are equipped with accessory devices, such as light guns and warning lights which are logically parts of the MI element and Warning Light System, respectively.

4. Auxiliary Console

   a. The majority of the DD CRT's in the Display System are also in SD consoles, as stated previously. Most of the remaining DD CRT's are used in auxiliary consoles. There are four types of auxiliary consoles: A, B, C, and D. The A and B models do not contain CRT's Models C and D do have DD CRT's. The location of an auxiliary console is determined by the work that has been assigned it.

5. Command Post Console

   a. The Command Post console provides operating positions for command personnel and staff. These personnel are continuously informed of the tactical situation in the air-defense sector by digital displays, warning lights, and a situation display that is projected on a large screen above and behind the Command Post console. As the information is evaluated, the personnel direct certain courses of action, using manual inputs located at the console.

6. Communications Equipment

   a. Telephone and radio communication equipment is provided at many SD and AUX consoles as a part of the tactical telephone system.

This enables operators to communicate with other defense personnel inside or outside the Direction Center or Control Center. The telephone-control panels are of plug-in modular construction to facilitate maintenance. The basic telephone/radio module consists of 18-circuit pushbuttons and 4 special function keys. When additional facilities are required, a special telephone module containing additional 6-circuit pushbuttons is employed. In addition to the telephone panels, consoles equipped for telephone or radio service are provided with an illuminated telephone dial and an operator's headset or handset.

7. Photographic Recorder-Reproducer Element (Kelvin - Hughes)

   a. The PRRE receives the output of the SDGE, converts it for presentation on the 7-inch SD CRT, photographs the viewing screen, and then projects the processed image on a large beaded screen mounted ahead of the Command Post console.

   b. The PRRE consists primarily of two sections, the SD section and the photographic recorder-reproducer. The SD section functions in much the same manner as the SDIS. The photographic recorder-reproducer is essentially a camera which automatically records the situation display on 35-mm film, develops, reverses the image, and automatically projects this image for evaluation by command personnel. A new display is recorded and reproduced every 30 seconds.

8. Situation Display Camera Element

   a. The SDCE makes a permanent 35-mm photographic record of situation displays. The records are used for tactical analysis and as training aids. Since records of both standby and active displays are required, the SDCE is duplexed. One of the two cameras, depending on which machine is on active status, records active displays; the other records standby displays.

b. The recording device itself is a semiautomatic (still picture) camera mounted over the face plate of the SD CRT installed in a modified SD console. This console is called the SD camera console because it has been specifically modified to accommodate the camera and the control circuits.

c. In addition to making permanent records of displays generated by the active computer, the SDCE records the results of maintenance programs without interrupting the standby computer.

9. Display Tester Element

a. The DTE is employed in testing the digital and situation display generator and indicator elements independently of the Drum System. Figure 1-34 illustrates the interconnections of the elements with the DTE. The DTE has provisions for inserting a test message into the SDGE or DDGE for subsequent display on the SDIE or DDIE.

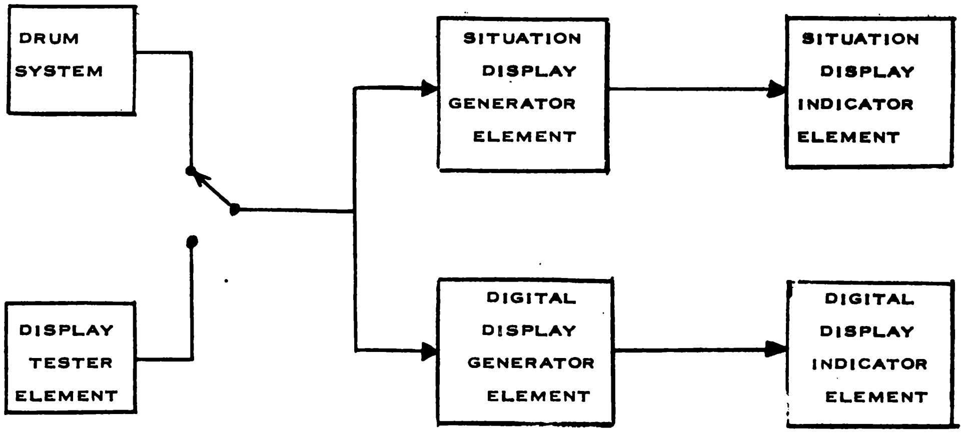

FIGURE 1-34 DISPLAY TESTER AND DRUM SYSTEM RELATIONSHIP TO DISPLAY SYSTEM

10. Distribution Element

a. The signal distribution element distributes outputs from the SDGE and DDGE to their respective indicators (SDIS and DDIS). In addition to distributing the outputs of the display generators, the signal distribution element also routes the light gun signals and warning light signals. The light gun and warning light signals are associated with the MI element and Warning Light System respectively.

b. Distribution Boxes

1. The distribution box serves the function of making signals generated by the display generator elements available to all SD, PRRE, and auxiliary console located throughout the AN/FSQ-7 and -8 equipment. The boxes have been engineered to minimize the length of cable runs and increase the flexibility of the signal distribution system.

2. Each box is electrically independent of the other. One section receives and distributes signals from the A display generator elements; the other section receives and distributes signals from the B display generator elements.

c. Signal Data Patching Panel

1. The signal data patching panel enables the operator of an SD console to patch route or transfer signals, category assignment bits, and category lines from the SDGE so that they are available to each of the associated consoles. The patching panel is located next to the (SEE ALL) SD console, one for each computer.

2. The patching panels and associated consoles are basically maintenance devices and can be used to monitor the displays that should be present on any SD or DD CRT. The signal data patching panels are part of the signal distribution element.

J. Summary Questions:

1. . What are the two major types of display messages produced in the S. D. System?

2. How does the console identify what message it will display?

3. How is it possible to deselect a message that has been assigned to a S. D. Console.

4. What is the purpose of the Display Tester and when is it possible to use it?

II. SD Tube Theory

A. General Information

1. The SD CRT is a character-display type of crt that was specifically designed to display characters in an SD message format.

   Figure 2-4 shows two distinct structural sizes of SD CRT's. The larger (19 inch) CRT is made in two types for the Display system. Both types are identical, physically and electrically; the sole difference being in the type of phosphor used. For SD camera application, the phosphor is P11 while the standard display consoles use P14 phosphor.

   Fig. 2-4 Page 0150

   The smaller (7 inch) CRT is used for photographic purposes in the Kelvin Hughes projector and hence uses a P11 phosphor also.

2. Figure 2-6 is a schematic representation of the 19 inch CRT. The tube primarily contains an electron gun, character selection plates, matrix, convergence coil, character position and compensation plates and a deflection coil. With the exception of the convergence and deflection coils, the elements are contained within the evacuated tube.

   Fig. 2-6 Page 0170

3. In the SD CRT tubes, the electron gun shoots a stream of electrons toward the screen. But this stream is intercepted by various elements that control, direct, and shape the beam to impinge a particular character and/or vector on a desired section of the screen. With the aid of figure 2-29, the path of a hypothetical electron can be followed.

4. The electron stream from the gun is deflected both vertically and horizontally to direct the beam to the selected character in the matrix. The matrix (fig. 2-8), in the form of a supported metal disk, has 63 characters cut through the metal; the remaining area in the 8 x 8 row format is left untouched as a beam inhibitor for blank space representation. The electron flow directed to the selected character in the disk is formed by the character matrix

   Fig. 2-29 Page 0160

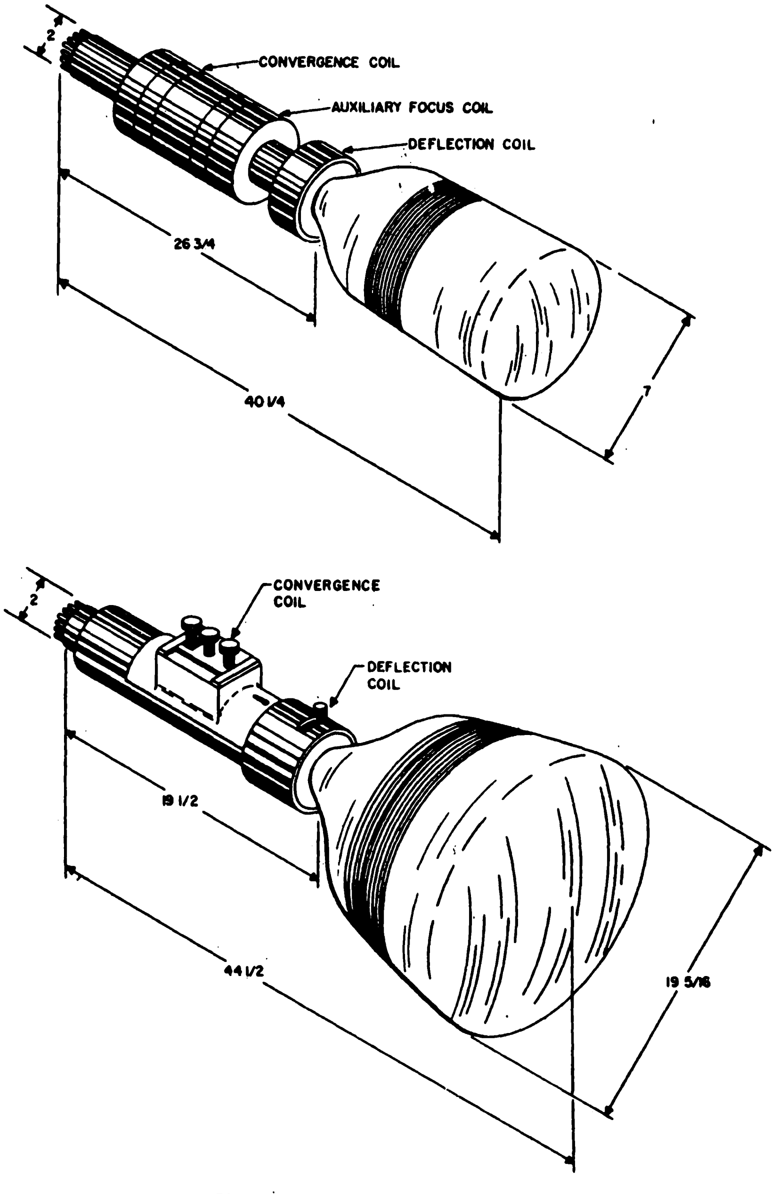

Figure 2–4. SD CRT Dimensions

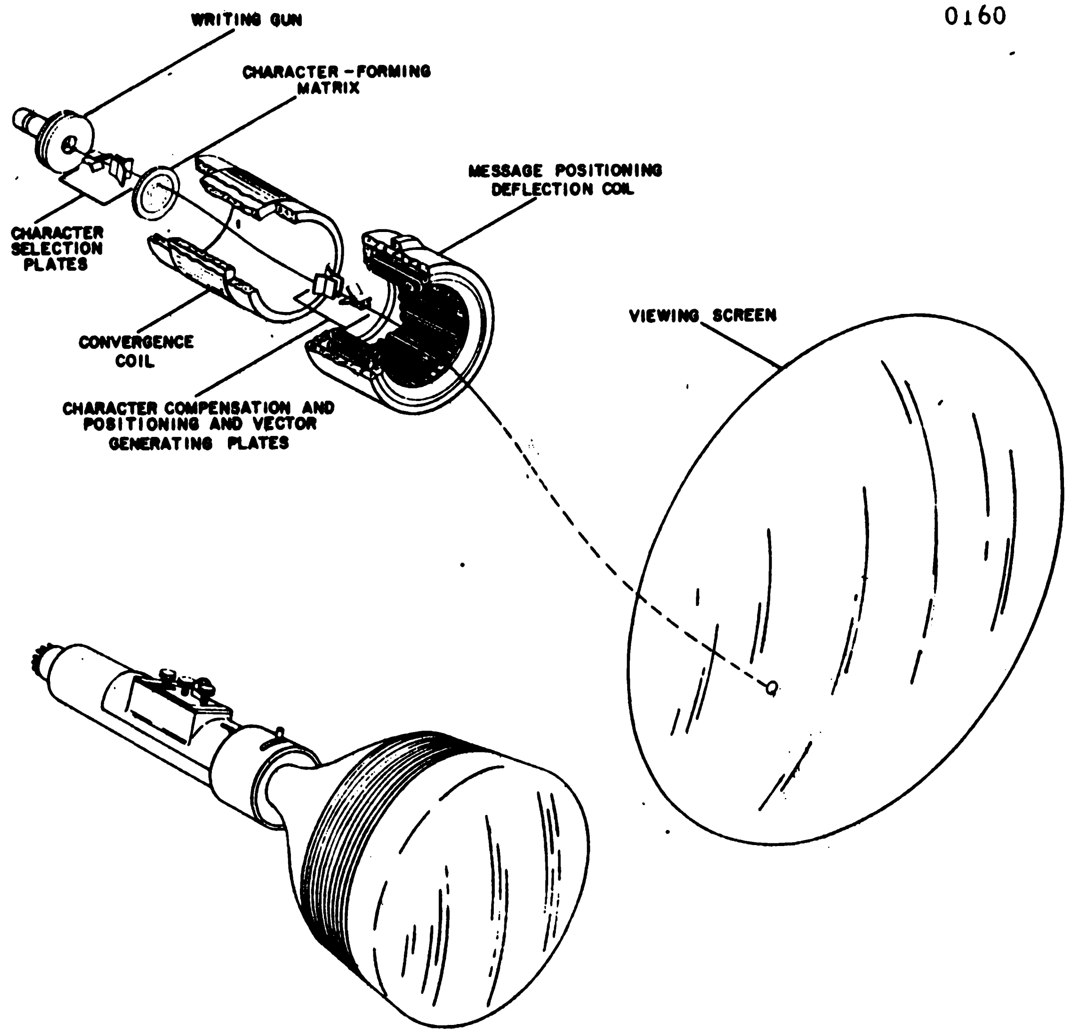

Figure 2—29. SD Cathode-Ray Tube

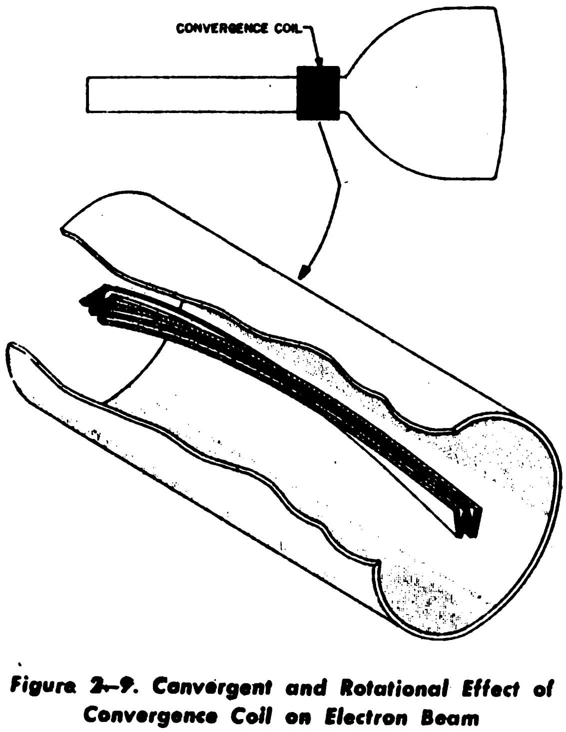

Figure 2-9. Convergent and Rotational Effect of Convergence Coil on Electron Beam

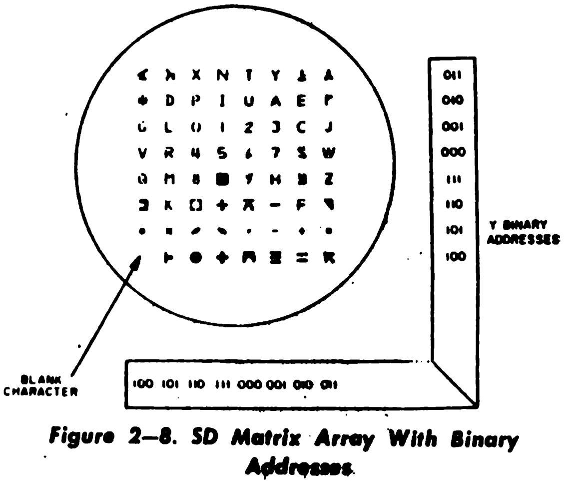

Figure 2—8. SD Matrix Array With Binary Addresses

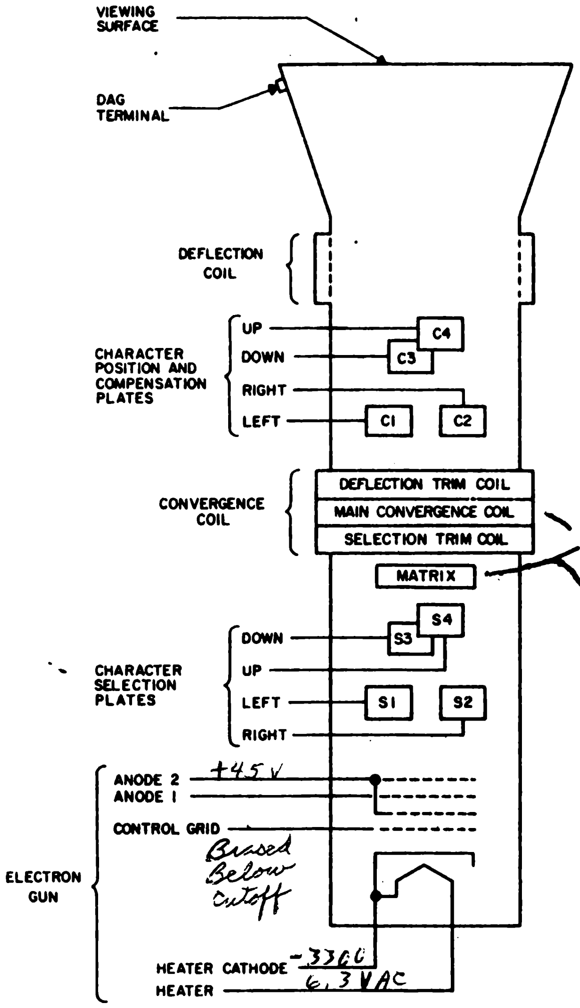

+45 V

Biased Below Cutoff

-3300

6.3 VAC

450° swirl CCW

90° rotated

Figure 2–6. 19-inch SD CRT Symbol

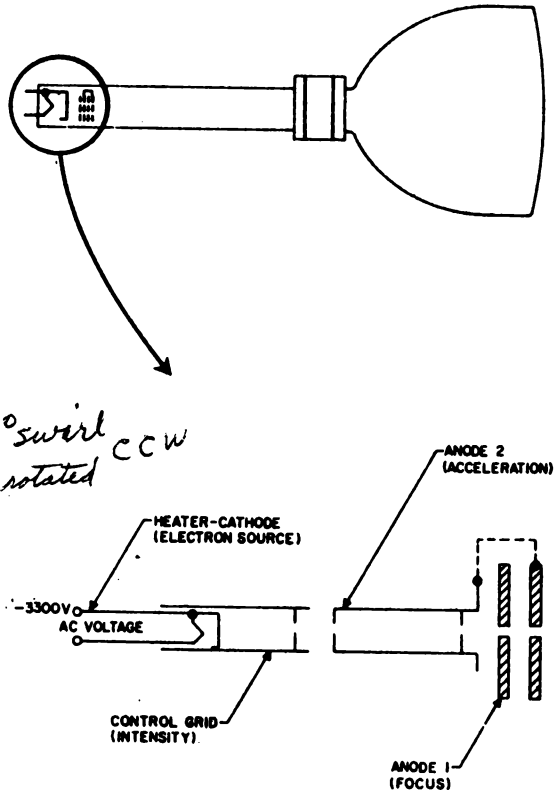

Figure 2–10. Electron Gun, Elements and Control Functions

in the shape of the character selected. Figure 2-8 is a greatly enlarged section of the character matrix. The stenciled beam of electrons now is headed toward the character position and compensation plates, but its path is affected by the magnetic field of the convergence coil.

Fig. 2-8
Page 0160

5. The convergence coil is a 3-coil assembly externally mounted around the gun envelope. The entire assembly contains a deflection trim coil, the convergence coil proper, and a selection trim coil.

    a. The effect of the convergence coil assembly on the electron beam is to simultaneously spiral the stenciled beam on its own axis and on the zero axis so that it is displaced by a rotational deflection through 90 degrees. Figure 2-9 shows the effect of the convergence coil on the character-formed electron beam.

    Refer:
    Fig. 2-9
    Page 0160

    b. Current through the windings of the selection trim coil sets up a magnetic field which opposes the field of the convergence coil in the area of the selection plates. This neutralizes the convergence coil effect on the selection plates and, with the deflection trim coil, effectively isolates the convergence coil field from affecting the character selection, and character positioning and compensation plates. Similarly, the deflection trim coil individually neutralizes the field effect on the deflection plates and, with the selection trim coil, isolates the other elements from the convergence field effect.

6. The beam now reaches the character positioning and compensation plates where the plates compensate for the original deflection imparted to the electron beam and simultaneously reorient the beam by deflection, to position the character properly in the message.

7. The electron beam, now a properly positioned character in a message format, is impinged on the selected portion of the screen by the deflection coil. The deflection coil field determines the area of the viewing screen in which the message is to be displayed. The deflection currents energizing the coil are held constant until all the characters in a message have been displayed.

8. The electron beam, in striking the solid materials of the phosphors, causes the latter to become luminous in the characteristic shape of the beam. A message similar to the typical display show in figure 1-27 can appear on the viewing side of the CRT face plate. Refer Fig. 1-27 Page 0020

9. Table 2-1 lists the functional descriptions of the SD CRT elements for displaying a character and a vector. Refer to Table 2-1

TABLE 2-1. SD CRT FUNCTIONAL REQUIREMENTS AND ASSOCIATED TUBE ELEMENTS

No.	FUNCTIONAL REQUIREMENTS Character Display	 Vector Display	 SD CRT Element
1.	Generate an electron beam.	Generate an electron	Electron gun
2.	Defocus the beam.	Focus the beam	Anode 1
3.	Intensify (bright or dim) the beam.	Intensify (bright or dim) the beam.	Control grid
4.	Accelerate the beam.	Accelerate the beam.	Anode 2
5.	Aim the beam at a character.	Aim the beam through the vector aperature.	Character selection plates.
6.	Form the beam in the shape of the character.	Pass focused beam unchanged.	Matrix
7.	Spiral the beam through 90 (450) degrees and make it intersect the longitudinal axis of the SD CRT.	Spiral the beam through 90 (450) degrees and make it intersect the longitudinal axis of the SD CRT.	Convergence coil.
8.	Cancel deflection applied in No. 5, above.	Cancel deflection applied in No. 5, above.	–

TABLE 2-1. SD CRT FUNCTIONAL REQUIREMENTS AND ASSOCIATED TUBE ELEMENTS

	FUNCTIONAL REQUIREMENTS		
No.	Character Display	Vector Display	SD CRT Element
9.	Position character-formed beam in the required location in the message format.	Position the pinpoint-focused beam in the required location in message format.	One set of character compensation, character position, and vector generation plates.
10.	—	Sweep the beam in a given direction through a given distance.	—
11.	Position the message on the face of the SD CRT.	Position the message on the face of the SD CRT.	Deflection yoke.

B. Detailed Operation of 19 inch SD CRT

1. Electron Beam Generation - The electron beam is generated by the electron gun.

   a. The electron gun consists of a separately heated cathode that acts as a source of electrons, a control grid that limits the number of electrons traveling toward the screen, a first (or focusing) anode, and a second (or accelerating) anode. Voltages applied to the first and second anodes accelerate the electrons and cause them to be focused into a narrow beam. The cathode control grid, and first and second anodes physically have their axes coincident with the axis of the tube. Electrons leave the heated cathode in random directions, but most of them are converged toward the axis of the tube by the action of the electric field between the cathode and the control grid.

b. The electrons pass through a space within the first anode that is almost field-free and enter the space within the first and second anodes, creating an axial field. As the electrons leave this field, their paths become less rapidly convergent. However, they are still headed toward the axis and will meet at a point. If this point is at the screen, it is said to be in focus. The forces producing convergence of the beam depend on the ratio of the voltages applied to the first and second anodes. By adjusting either of these two voltages, the point of convergency may be changed. Focus is usually controlled by adjusting the first-anode voltage.

A defocus gate applied to anode 1 super-imposes a positive voltage level on the fixed focus potential. This changes the focal effect of the electron lens to broaden the beam (increase its cross-section area).

c. The heater voltage is supplied from a transformer winding of the high-voltage unit, model A (aHVU.) The cathode voltage is fixed at —3, 300V, obtained from the high voltage power supply, model C (cHVP.) The cathode voltage return is tied to one side of the filament.

Refer Fig. 2-11
Page 0220

d. The control grid is biased by a voltage obtained from aHVU. This voltage is adjustable between fixed potentials (—3, 450 and —3, 300 V by an intensity control in aHVU.) The bias on the control grid is sufficient to cut off the flow of electrons to the screen (blanked.) The variable gate amplifier, model A (aVGA), output is fed to the control grid through aHVU and is the source of intensity gates (unblanking.) The intensity gate signal will overcome the cutoff bias on the control grid and cause it to conduct electrons, illuminating the screen and therefore unblanking it. Anode 2 is maintained at +45V by aHVU. The voltage differential between the cathode and anode 2 (3, 345V) is the accelerating potential for the electrons emitted by the cathode. The potential on anode 1 is adjusted to a fixed voltage between −2, 700 and −2, 300V) by the setting of a focus control in aHVU. The resultant electrostatic field set up between anodes 1 and 2 determines the cross-sectional area of the electron beam. A defocus gate, supplied by the variable gate amplifier, model B (bVGA), is fed to anode 1 through aHVU. This defocus gate is used to vary the cross-sectional area of the electron beam.

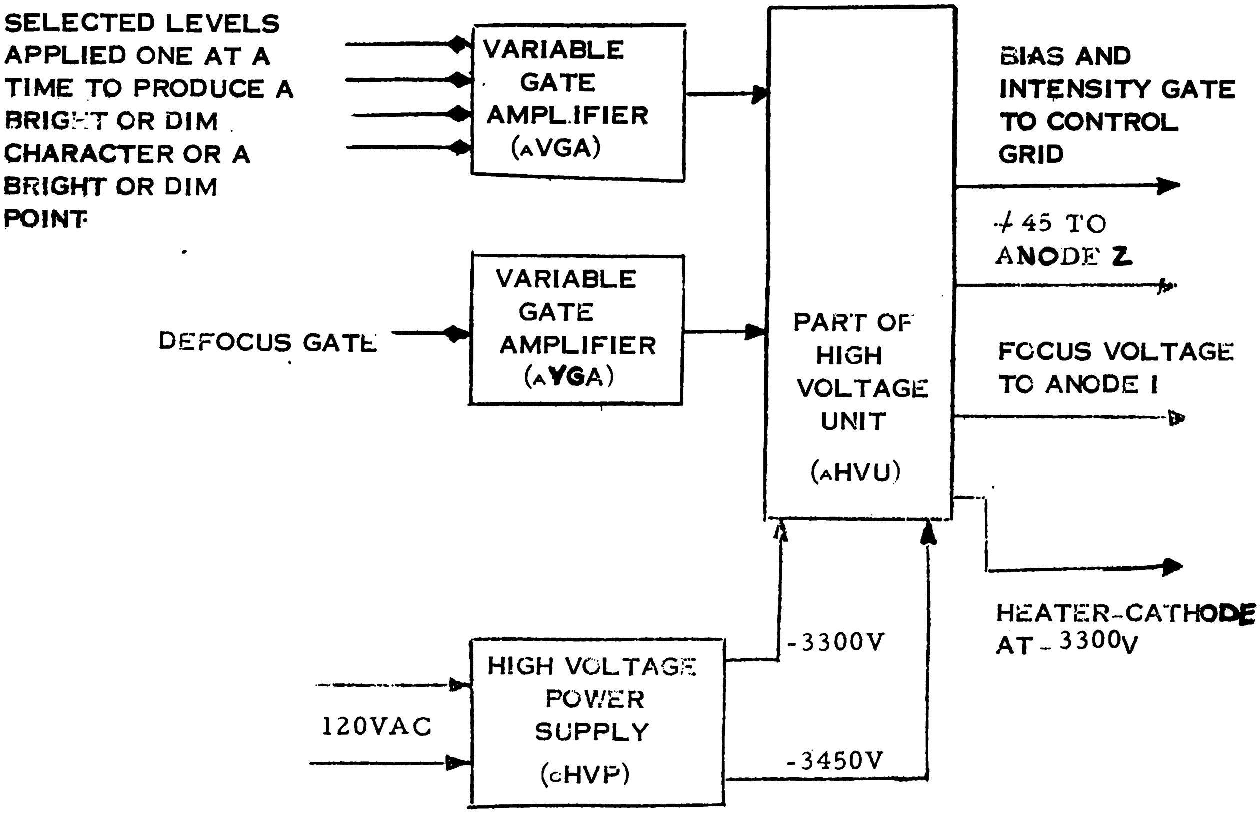

FIGURE 2-11. ELECTRON GUN, CONTROL AND SUPPLY VOLTAGES, BLOCK DIAGRAM

e. The potentials applied to the elements of the electron gun determine the characteristics (blanked and unblanked, intensity, and cross-sectional area) of the electron beam.

2. Character Selection

a. The character selection plates of the SD, CRT, in association with the matrix, select a specific character for display. The following theory of character selection operation explains the method of deflection and the origin of deflection voltage. Figure 2-12 is a simplified drawing of the character selection plates. The insert drawing shows the approximate location of the plates within the envelope of the SD CRT. Figure 2-13 is a block diagram of the circuits located in the SDGE and the model A high-voltage unit, which are associated with the SD CRT.

Refer Fig. 2-12
Page. 0250

Refer. Fig. 2-13
Page 0250

b. A significant feature should be noted before proceeding. In figure 2-13, the horizontal selection decoder feeds the vertical character selection plates. This would appear to be an obvious error, but the effect of the convergence coil on the path of the electron beam makes this necessary. The electron beam rotates 90 degrees in passing through the convergence coil area of the magnetic field. To compensate for this effect, the matrix is reoriented 90 degrees in the counter direction. The 90-degree rotation has the effect of interchanging the X and Y axis. For this reason, X Axis selection voltages must be applied to the vertical selection plates. Similarly, the Y-axis selection voltages must be applied to the horizontal selection plates.

c. The character selection plates generate electrostatic-deflecting fields as a function of analog voltages. An electron beam passing through such a field is deflected in the direction of the more positive plate. The beam deflection is proportional to the voltage differential applied to the plates (forward velocity is assumed constant.) Figure 2-12 shows the path of an electron beam under three different conditions. Path A depicts an undeflected electron beam. The voltages on plates U and D are equal and the voltages on plates L and R are equal. Path B represents an electron beam deflected in the vertical position only. To produce this result, deflection plate U is positive with respect to plate D. Plates L and R still have an equal potential. Path C represents an electron beam deflected both vertically and horizontally. To achieve this effect, plates U and L are each more positive then plates D and R, respectively. By the application of appropriate voltages to the deflection plates, the electron beam is accurately directed to any selected point on the reference plane [illegible] as is physically the case, the character matrix.

a. The character selection voltages are generated in the SDGE (figure 2-13). Binary input levels are applied to two 3-bit decoders, one decoder for each axis (X-Y) of deflection The two decoders are packaged as a single unit and designated as the 6 bit binary decoder. There are eight combinations of binary levels for each axis As a result of these inputs the binary decoder produces an analog voltage output at one of eight possible corresponding levels. Each level corresponds to a row (X axis) or column (Y axis) in the character matrix. These analog levels are fed to the analog driver which drives the corresponding selection-centering and amplitude-control circuits. The control circuits are tied to their respective character-selection plates as indicated in figure 2-13.

3. Electron Beam Shaping

a. As described in the introduction (par. 1.1 of this part), the electron beam is formed and shaped as a stenciling of the particular character cutout in the matrix (fig. 2-15). There are 63 such characters in an equidistant format of eight columns and eight rows. There is a blank space for the missing 64th character to permit space-blank presentation in a message format. The size of the characters in the matrix is about 1/10

Refer Fig. 2-15
Page 0270

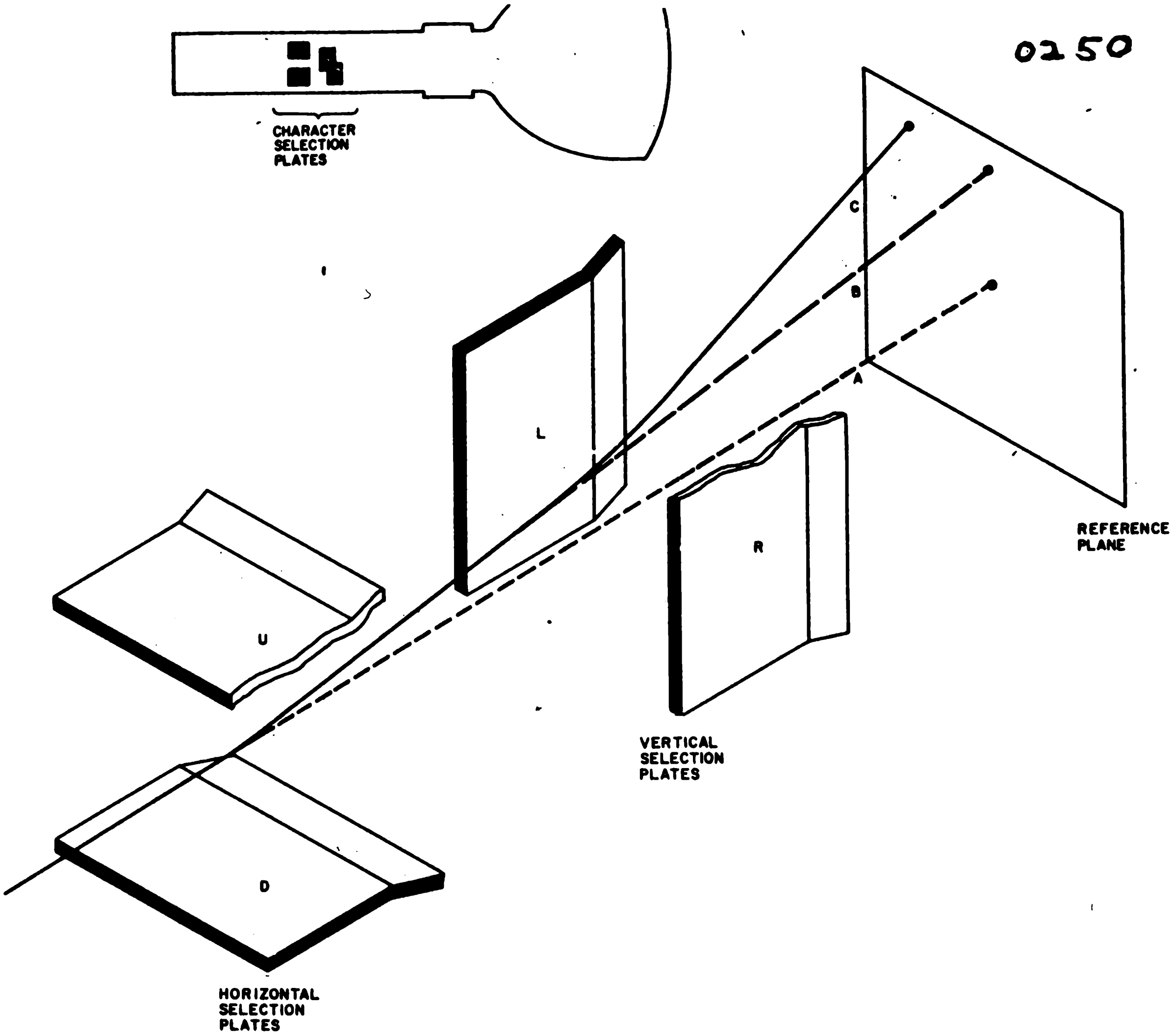

Figure 2–12. Character Selection Plates, Effect on Electron Beam

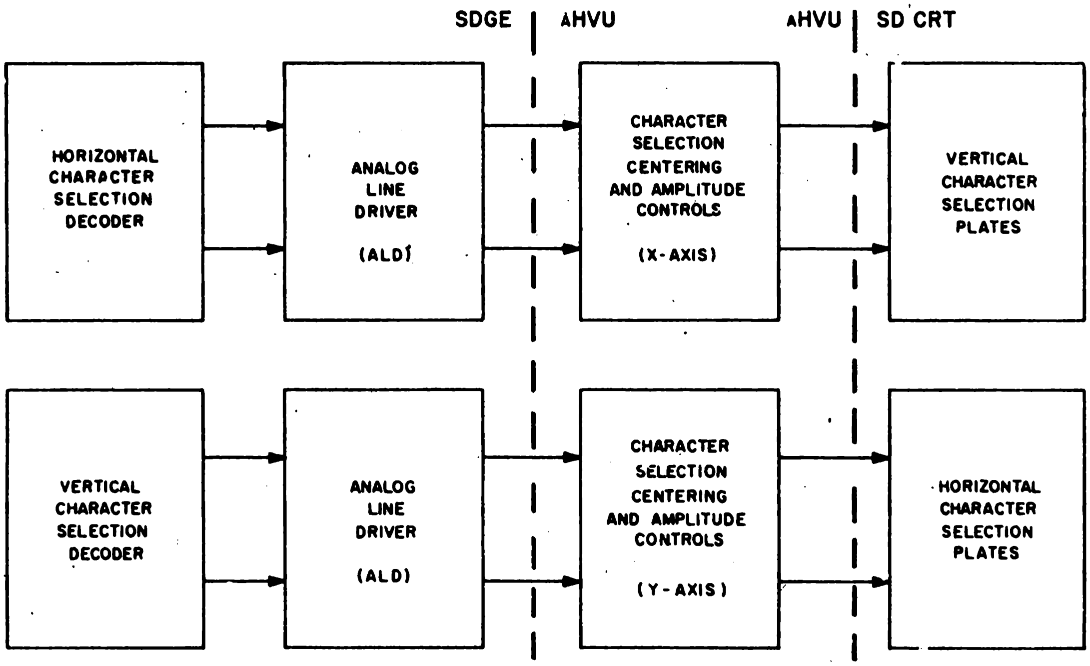

Figure 2–13. Character Selection Control Circuits, Block Diagram

the size of that area presented on the screen by the projected numbers, letters, or symbols which are the characters in a typical display message.

b. Besides the character representation, another important factor in the formation of the beam is its cross-sectional area. The area of the beam must be greater than the cutout area in the matrix for full character selection.

c. For vector generation or point selection, the beam is first reduced to a focused point for unimpeded progress through the vector aperture in the matrix. Figure 2-15 illustrates the relative area requirements for the electron beam.

4. Electron Beam Convergence

a. The character selection plates divert the electron beam from its axial path in the SD CRT. To overcome this effect, the beam must be converged to nearly its original shape and course for further control. The convergence coil is used to counteract the effect of the character-selection plates on the beam. The deflection imparted to the beam by the selection plates is designed to intersect the matrix at the selected character. In figure 2-16, where this intersection is illustrated, the focusing effect of the convergence coil's magnetic field can be followed, from left to right.

Refer Fig. 2-16
Page 0270

b. As seen in figure 2-16, if the four electron beam paths are extended in a straight line from the point of emergence from the deflection plates to each of the four selected characters, the individual beam paths are obviously divergent. Before any one of the beams (the four beams represent four typical characters) can be further controlled, the beam must be returned to the same focal point on the longitudinal axis. This is effected by generating a uniform magnetic field whose lines of flux are parallel to the axis of convergence. This magnetic field is created by the SD CRT convergence coil.

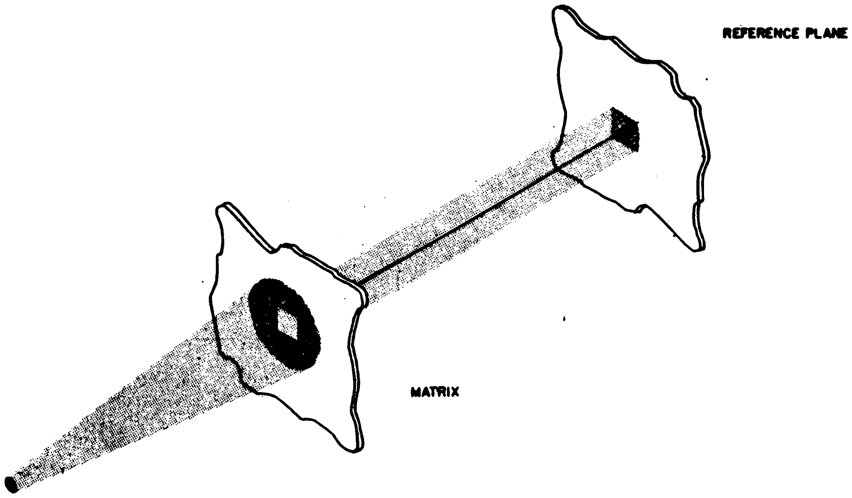

VECTOR APERTURE SELECTED AS CHARACTER WITH DEFOCUSED BEAM

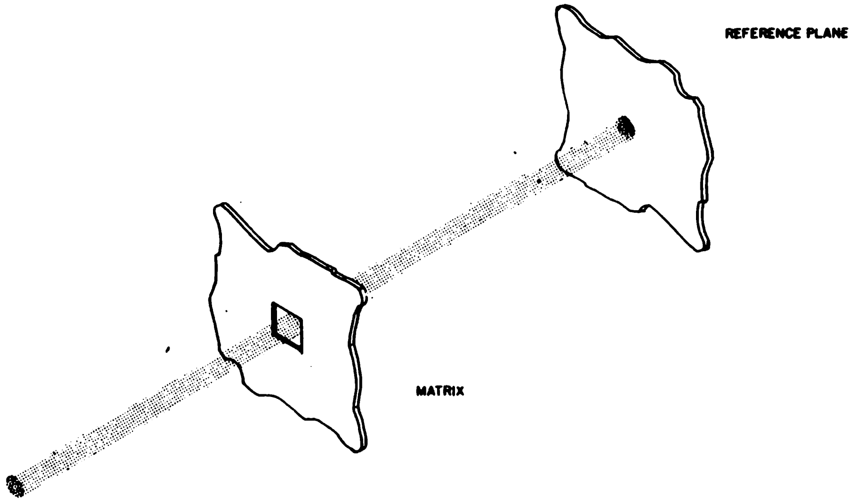

Figure 2—15. Relative Area of Defocused and Focused Beam through Square Aperture

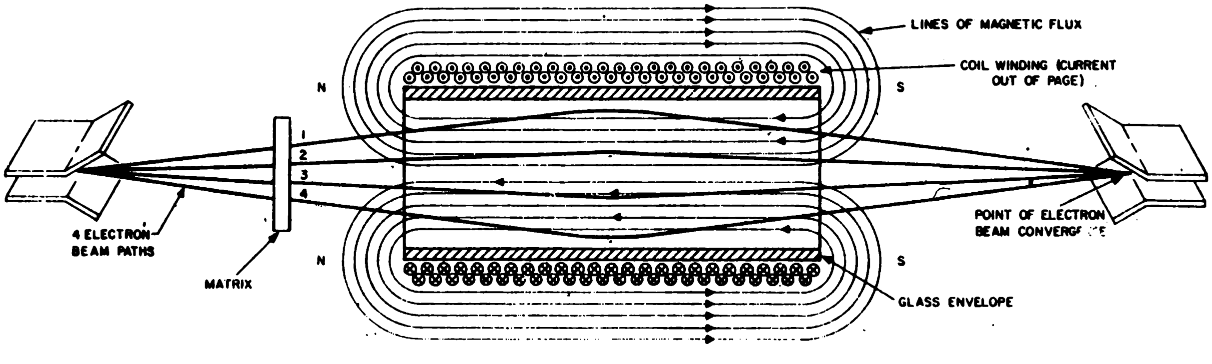

Figure 2—16. Focusing Effect of Convergence Coil Magnetic Field

c. Figure 2-17 shows the convergence effect of the magnetic field caused by the convergence coil. The heavy lines, running from left to right, represent the beam paths of four different respective characters. Each is initially deflected to a different point through the character matrix. The individual beams continue in straight lines to the convergence coil area, where each enters the magnetic field at a different angle. The convergence force of the field on the electron beam is proportional to the angle of deflection. Consequently, the outer beams are subjected to a greater bending force than the inner beams, with the result that all deflected beams ultimately interest at one focal point on the longitudinal axis. In addition to the convergent effect of the magnetic field, a rotational or spiraling force is exerted on the electron beam. Refer Fig. 2-17 Page 0290

d. The sum of the forces exerted on the electrons in the beam produces a resultant which imparts a sideward and inward (convergent) force on a beam. Figure 2-9 shows the combined effects of these forces on an electron beam stenciled by the character W. The angle formed by the electron beam and the longitudinal axis of the SD CRT (after the beam leaves the magnetic field) is identical with the angle of deflection imparted by the character selection plates. Refer Fig. 2-18 Page 0290

e. The circuits which control the extent of rotation and ensure a constant point of convergence of the electron beams are shown in block form in figure 2-18. This point of convergence and the degree of rotation are a function of magnetic field strength and electron beam velocity. Convergence coil current determines magnetic field strength; accelerating potential determines beam velocity. If either varies, the point of convergence and degree of rotation will vary, producing misalignment and tilting of characters in a message display. The model A convergence current regulator (aCCR) controls convergence coil current to prevent any variation.

The model A high-voltage unit provides a correction voltage of -300V. This variation is proportional to accelerating voltage variations. The aCCR output

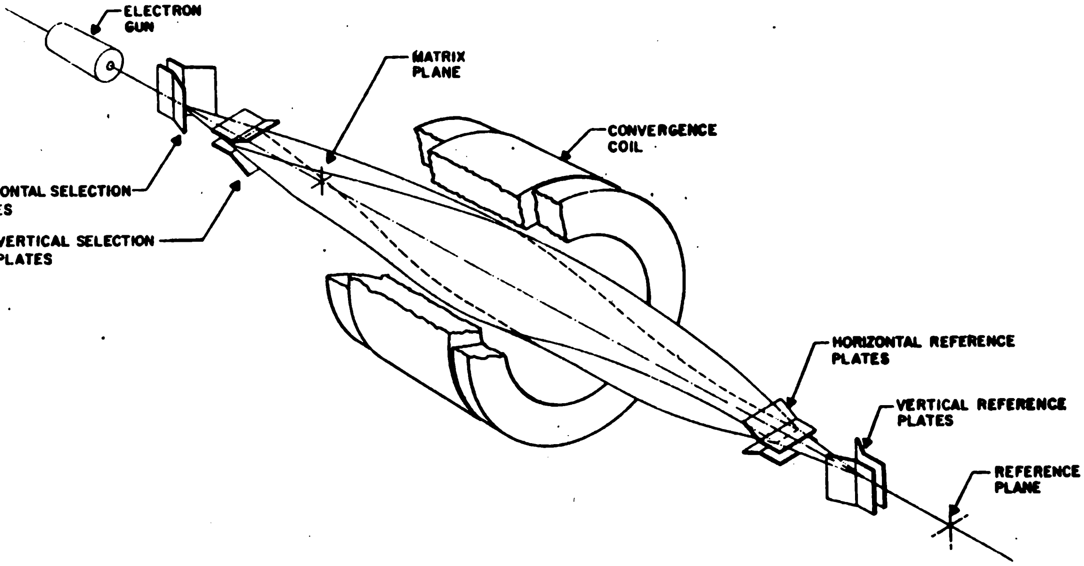

Figure 2—17. Effect of Convergence Coil in Returning All Beams to Reference Plane Axis

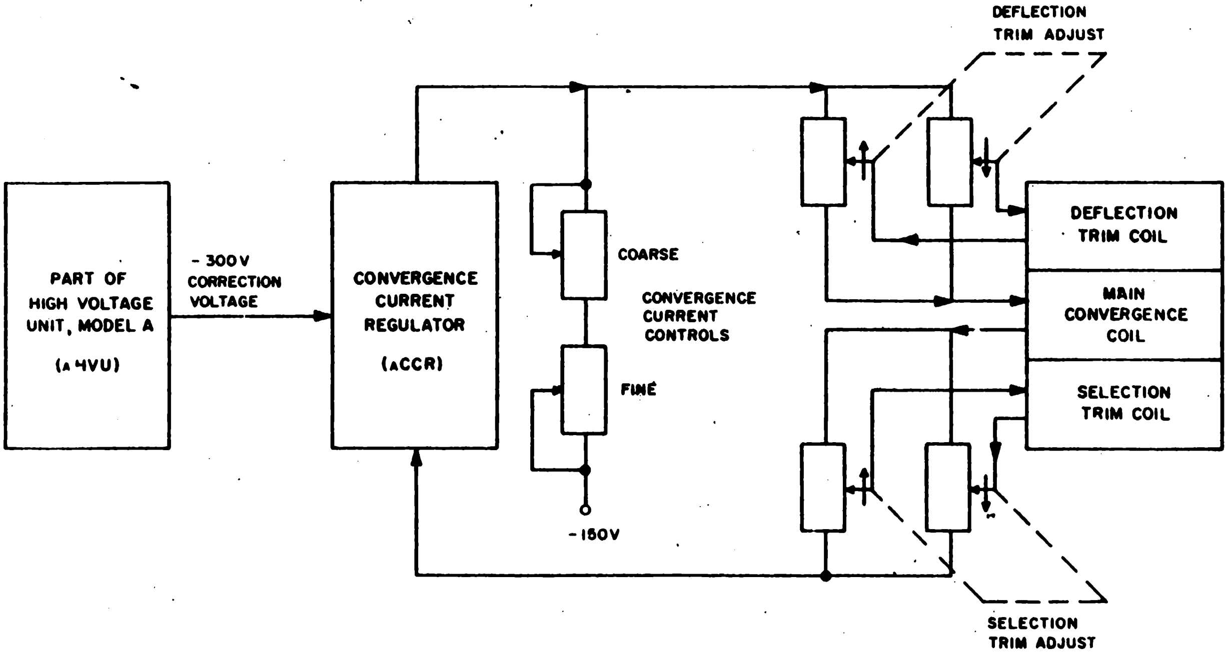

Figure 2—18. Convergence Coil Assembly and Associated Circuits, Block Diagram

current is a function of this correction voltage variation and compensates for electron beam velocity variations. Thus, if the beam speeds up, the magnetic field is strengthened. If the beam slows down, the magnetic field is weakened. Nominal magnetic field strength is set by means of the convergence current controls. These controls have the greatest influence on beam rotation and point of convergence. Final adjustments are made with the selection and deflection trim adjustments.

f. The selection trim coil serves two functions. It isolates the selection plates from the convergence coil magnetic field and permits precise adjustment of rotation within a range of approximately 4 degrees. The deflection trim coil also serves a dual purpose. It enables precise control of the point of convergence within the area of compensation and positioning plates, and isolates the convergence coil magnetic field from these plates.

5. Character Compensation and Positioning

a. After leaving the convergence coil area, the electron beam passes between the compensation and positioning deflection plates. The method of deflection is the same as that discussed in paragraph II B 2. Figure 2-19 shows the approximate location of the character compensation and positioning plates within the tube envelope.

Refer Fig. 2-19
Page 0310

b. The circuits providing the control voltages to the deflection plates are shown in block form in figure 2-20. Binary position and compensation-determining levels are converted into analog voltages by the respective decoder in the SDGE. The analog voltages are fed through the model A high-voltage unit (aHVU) to deflection plates of the SD CRT by the respective analog drivers (ALD). The compensation voltages are the character selection voltages with reversed polarity, which nullify the character selection deflection and make the electron beam coincident with the longitudinal axis of the SD CRT. Applied simultaneously, the positioning voltages impart a new deflection to the electron beam which positions the selected character in the required location within

Refer Fig. 2-20
Page 0310

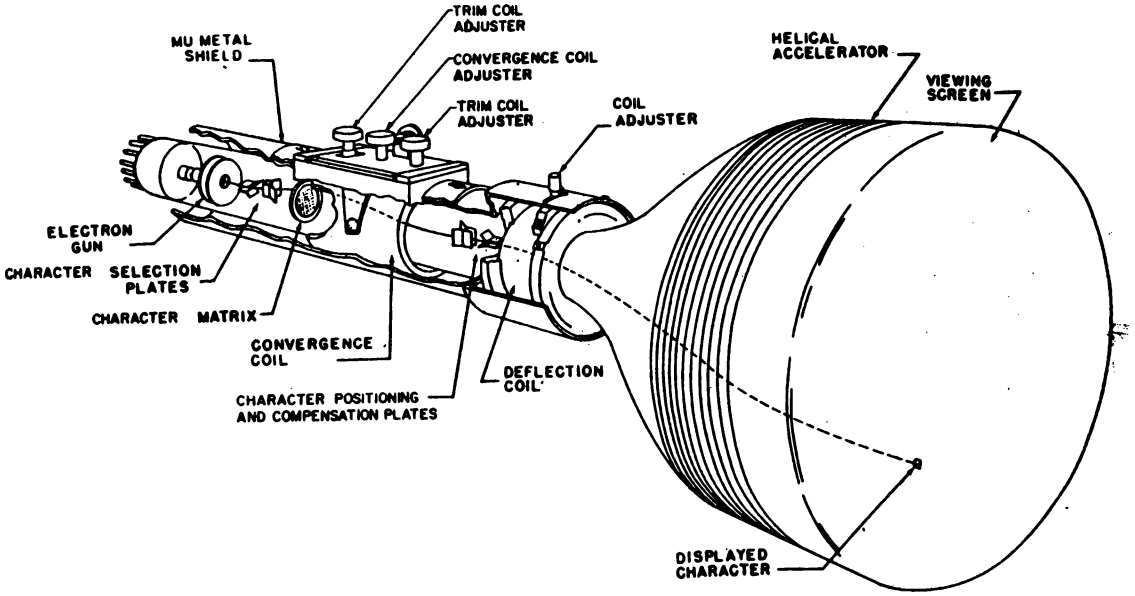

Figure 2—19. 19-Inch SD CRT, Cutaway View

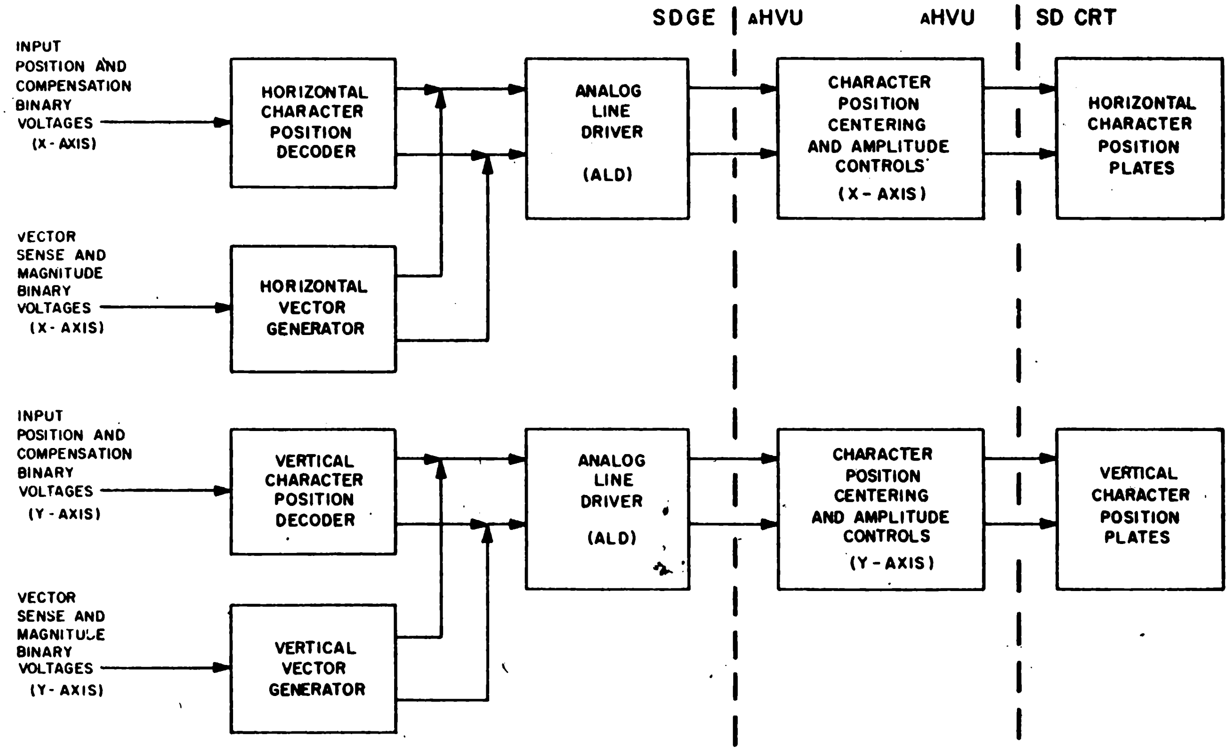

Figure 2—20. Character Position, Compensation, and Vector Generation Control Circuits, Block Diagram

a message format. In effect, the compensation and position plates straighten out the beam and reposition it.

6. Message Deflection

a. Each message unit, consisting of a vector and/or character, is deflected to a particular location on the viewing screen of the SD CRT by the deflection coil. Figure 2-21 shows the coil with one pair of deflection windings. The inset drawing shows the approximate location of the coil around the neck of the tube envelope. The coil is wound on a square form. There are two windings. The black winding on the top and botton sides of the coil is a continuity between the power supply and the deflection driver (DEF); similarly, the white winding is continuous to the control circuits. Refer Fig. 2-21 Page 0330

b. Electron flow through the black winding generates a magnetic field of opposing polarity to that generated by the white winding. The vertical sides of the coil (not shown in figure) have the same type of windings. This results in a magnetic field of variable strength and reversible polarity that can be generated along each axis (horizontal and vertical) with the neck of the SD CRT. The magnetic field strength is a function of the magnitude of the electron flow. The polarity of the field is determined by the winding which carries the greater electron flow.

c. Figure 2-22 illustrates the field-generating properties of the windings on one vertical side of the coil. The discussion concerning these windings applies equally to the windings on each of the other three sides of the coil. Solid and dashed lines are used to distinguish between the two windings and their respective fields. As shown, electronic flow in the solid-line winding (I_2) is in a counterclockwise direction and produces a north pole at the top of both vertical coil members. Refer Fig. 2-22 Page 0330

Electron flow (I_1) in the dashed-line winding is in a clockwise direction and produces a north pole at the botton of both vertical coil members. With I_2 greater than I_1, the solid-line magnetic field is the stronger. An electron beam directed into the page

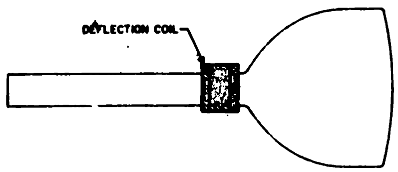

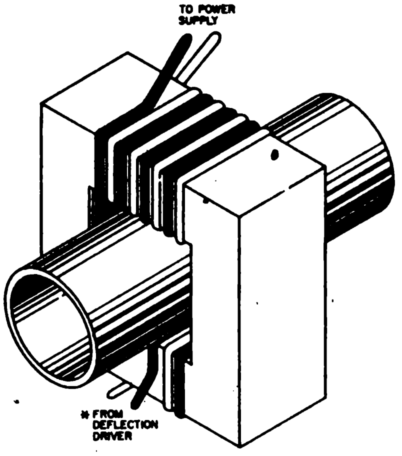

* WINDINGS ARE INTERRUPTED AT THIS POINT FOR ILLUSTRATIVE PURPOSES.

Figure 2—21. Deflection Coil, Horizontal Windings, Simplified Drawing

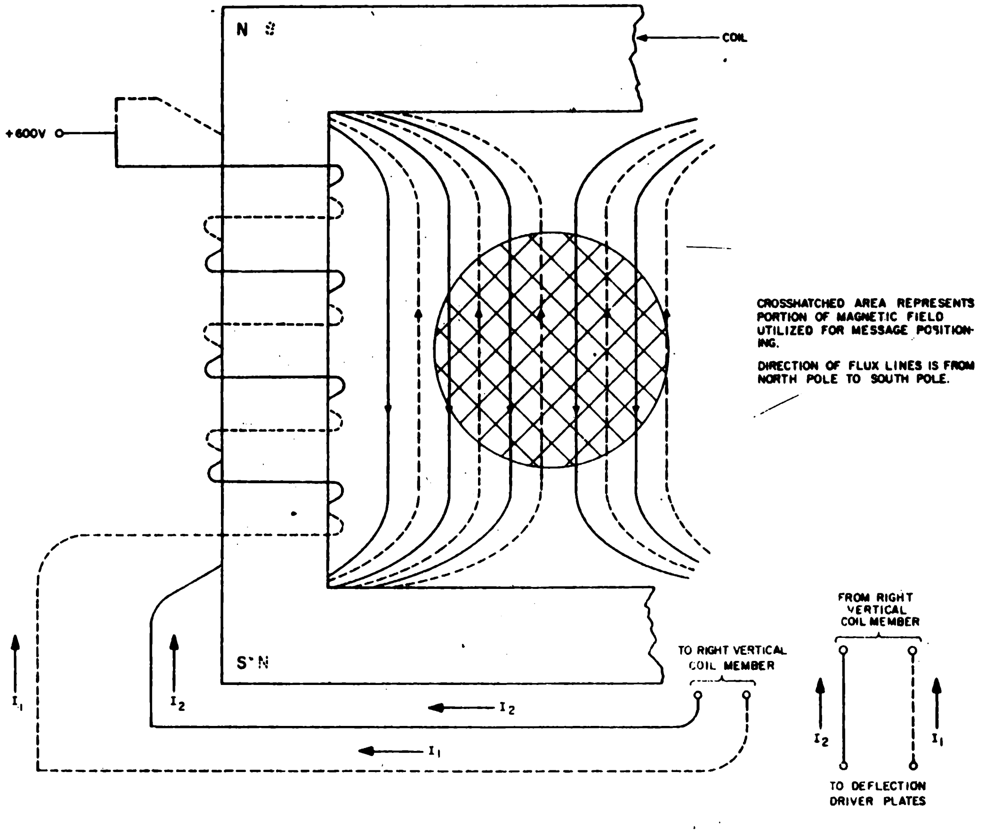

CROSSHATCHED AREA REPRESENTS PORTION OF MAGNETIC FIELD UTILIZED FOR MESSAGE POSITIONING.

DIRECTION OF FLUX LINES IS FROM NORTH POLE TO SOUTH POLE.

Figure 2—22. Deflection Coil, Magnetic Field Diagram

d. Figure 2-23 is a block diagram of the circuits which are utilized in message-positioning. The 10-bit binary decoder produces an analog voltage as a function of 10 binary levels. There is one decoder for each deflection axis. The decoder outputs are applied to the respective deflection amplifier and driver together with a reference level from the decoder simulator. The deflection drivers and amplifiers maintain a linear relationship between this analog voltage input and the currents supplied to the windings in the deflection coil. Thus, a direct relationship between digital-positioning information and message-deflecting currents is established to permit precise positioning (within 1/1024 increment of total deflecting along either axis) of a message on the viewing screen of the SD CRT.

Refer Fig. 4-23
Page 0350

7. Post-Acceleration Coating

a. The unconventional shape of the SD CRT, for a round-face tube, is due to its unusual requirements. The need to display characters over the entire area of a 19-inch screen, and the necessary high intensity of illumination for their display, made this shape optically desirable. In order to realize the required amount of illumination, it was necessary to increase the energy of the beam. Because of the optical properties of the tube, beam energy had to be obtained by post acceleration. This post-acceleration potential is developed across the helical accelerator (often referred to as a dag coating). The helical accelerator is located in the portion of the envelope between the deflection coil and the screen. The accelerator is a continuous spiral of electrically resistive material, ruled on the inner surface of the bell portion of the envelope extending to nearly 7 inches. The conductive coating bands of the helix are about 0.050 inch in width, spaced 10 turns to the inch. The total length of the helix is approximately 375 feet; it has a total resistance of about 100 megohms.

b. This type of accelerator has several advantages over types consisting of one or more bands of material, particularly, less distortion of the character-shaped beam.

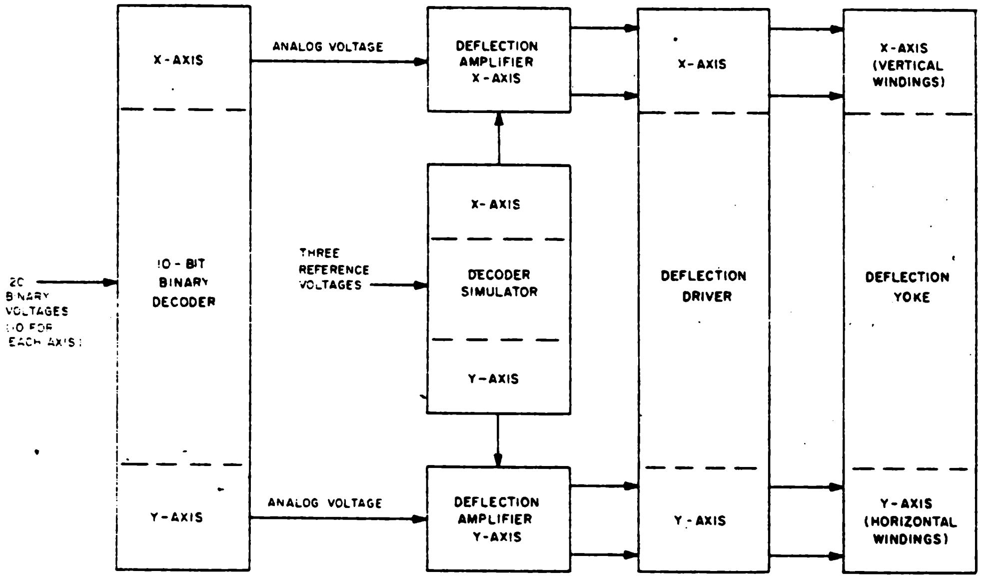

Figure 2–23. Message-Positioning Control Circuits, Block Diagram

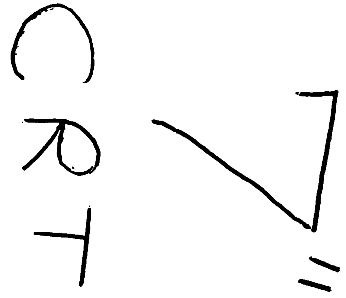

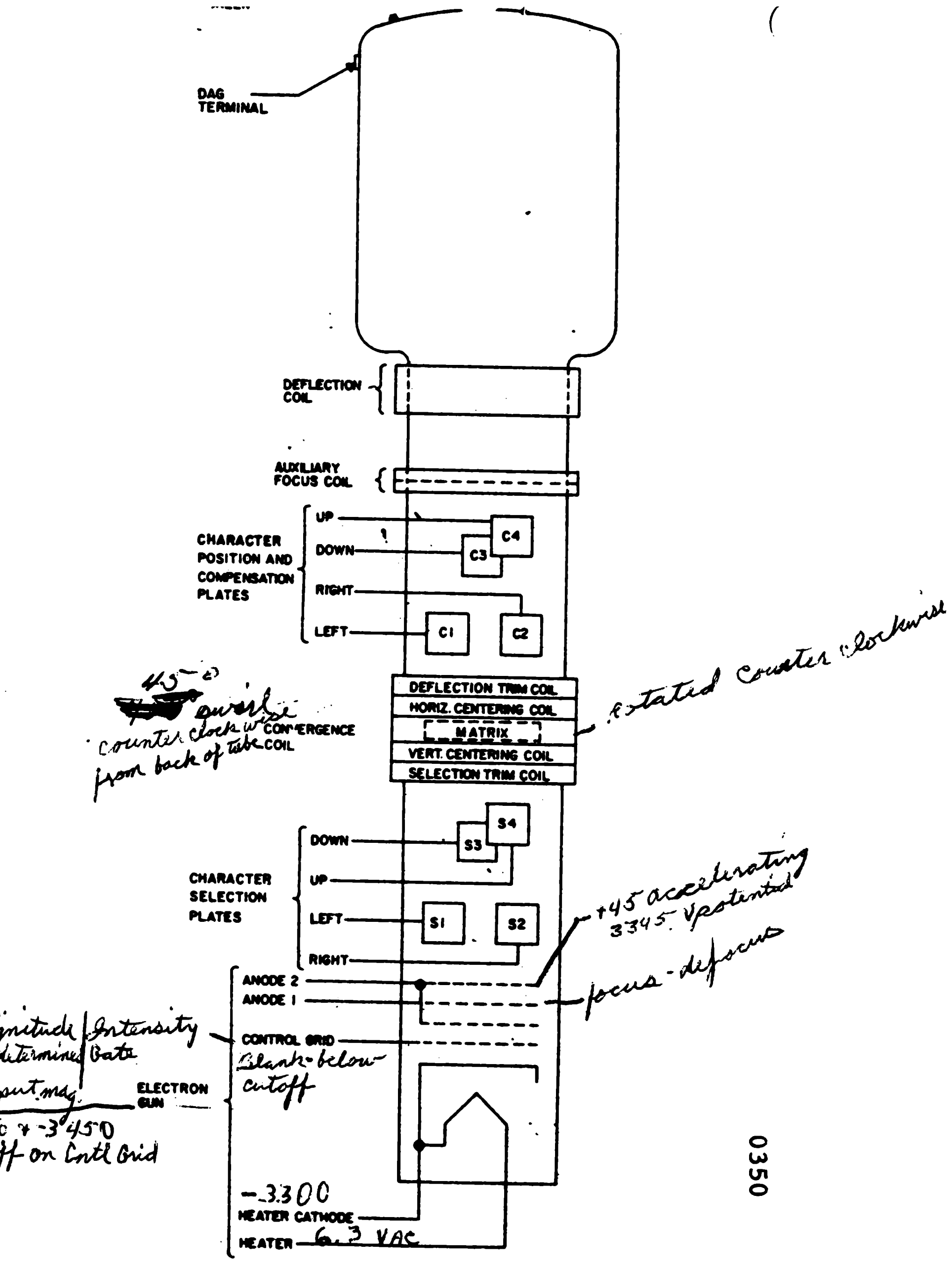

45°
swirl
counter clockwise
from back of tube

rotated counter clockwise

+45 accelerating
3345 V potential

focus - defocus

Char.
magnitude | Intensity
determined | Gate
by input mag.

-3300 + -3450
Cutoff on Cntl Grid

Blank-below-
cutoff

-3300

6.3 VAC

Figure 2–24. 7-inch SD CRT Symbol

8. Screen Phosphors

a. To convert the energy of the electron beam into visible light, the area where the beam strikes is coated with aphosphor material which emits light when bombarded with electrons of sufficiently high velocities. This phenomenon is called fluorescence. The continuance of light output, for a short time after bombardment has ceased, is called phosphorescence. All fluorescent materials are associated with a characteristic relationship between the intensity of the emitted light and the colors contained in that light. Some emit a green light; others, yellow, blue, orange, etc., depending upon the phosphor or mixture of phosphors used.

b. All fluorescent materials have some afterglow or phosphorescence, but the duration of the afterglow (or persistence) varies with the material as well as with the energy in the beam.

9. Persistence of Phosphors

a. The persistence of the screen is generally designated by a "P number." In applications where a CRT is used for observing periodic phenomena, which occur at a low repetition rate, a screen material on which the image will linger is desirable. Such a tube is described as a "long persistence" tube. Where the image changes rapidly, a "short persistence" tube is employed. If the application is such that a tube display will be photographed, as well as observed directly, a phosphor having a spectral light output in the blue range is used.

b. Of the Display System CRT's the 19-inch SD CRT used in the camera console and the 7-inch SD CRT used in the PRR have P 11 phosphors. The other 19-inch SD CRT, although identical in every other respect, has a P14 phosphor, and is used in the SD consoles.

Phosphor-P11	Produces a brilliant actinic spot of bluish fluorescence of short persistence. This color is effective for photographic applications because of the

	sensitivity of the film emulsion to blue light.
Phosphor-P14	A medium-long persistence cascade (2-layer) screen. During excitation by the electron beam, the phosphor exhibits purple fluorescence of short persistence. After excitation, it exhibits an orange phosphorescence which persists a little over a minute.

10. Character Display Summary

a. An intensity gate and a defocus gate applied to the appropriate elements in the electron gun provide an electron beam of a large cross-sectional plates. Analog voltages applied to these plates deflect the electron beam to a character on the character matrix. The electron beam, in passing through the matrix, is extruded into the shape representing the character and enters the magnetic field of the convergence coil. The magnetic field converges the beam to intersect the longitudinal axis of the SD CRT in the area of the character position and compensation plates.

b. Analog compensation voltages applied to the character position plates bend the beam to coincide with the longitudinal axis of the SD CRT. Simultaneously, analog-positioning voltages applied to these plates deflect the electron beam to the required position in the message format. The electron beam next enters the deflection coil area. Analog currents in the deflection coil windings generate a magnetic field which deflects the electron beam to the required point on the viewing screen of the SD CRT.

11. Vector Display Summary

a. The procedure for producing a vector is summarized in table 2-1. A discussion of the vector display operation follows.

b. The vector intensity gate unblanks the SD CRT. The gate width is 50 usec, twice as long as the character intensity gate. Two factors determine the characteristics of the vector intensity gate. First, the vector is generated by a moving electron spot or point. The intensity of the point must be increased to produce a vector with an overall intensity equal to the intensity of the character. Second, all vectors are generated in the same length of time irrespective of vector size. When a dim image of a vector is required, the intensity gate is correspondingly reduced in amplitude. Refer to the discussion of the model A variable gate amplifier for a more detailed discussion of the intensity gates.

c. The electron beam must have the smallest cross-sectional area possible. The focus adjustment in high-voltage unit model A determines this area. A focus gate can be considered the absence of a defocus gate. In the absence of the latter, the adjusted focus of the electron beam prevails. As shown in figure 2-15, this adjustment permits unchanged passage of the electron beam through the character matrix.

Refer Fig.
2-15
Page 0270

d. The character selection plates deflect the electron beam into and through the vector aperture in the character matrix. The convergence coil directs the beam at the point of convergence between the character position and compensation plates. Here, as in character display, the beam is returned to the longitudinal axis of the SD CRT by the application of analog voltages opposite in polarity to the character selection analog voltages. Simultaneous with the application of these correction voltages, analog vector-positioning voltages are applied, deflecting the electron beam to the vector point of origin in the message format. Immediately thereafter, sweep voltages are superimposed on these voltages at the character position plates. The electron beam is swept by the varying pairs of potential (X and Y), producing a straight-line image of the required direction and length.

C. Operation of 7 Inch SD CRT

1. General

a. The 7-inch SD CRT is similar, operationally, to the 19-inch SD CRT except with respect to the following: the location of the character matrix, flexible placement of the convergence coil, and the addition of an auxiliary focus coil. Figure 2-24 is a schematic representation of the 7 inch SD CRT symbol.

Refer Fig. 2-24
Page 0350

b. The character matrix in the 7-inch tube is located in the center of the convergence field. In the 19 inch tube, the matrix is fixed at the electron gun end of the convergence field. The convergence coil can be moved and set-positioned along the neck of the 7-inch CRT. The 19-inch SD CRT convergence coil, as such, is fixed. The auxiliary focus coil employed on the 7-inch tube is used to ensure maximum definition of display. This tube is used exclusively for photographic reproduction, thus making extreme definition essential for subsequent large-screen image projection. As a further aid to faithful photographic recording, the viewing screen phosphor emits a blue light to which photographic emulsions are sensitive. This P11 phosphor is also employed for the 19-inch SD CRT used in the camera console.

c. With the exception of the differences already enumerated, the 7-inch SD CRT is very much the same as the 19-inch SD CRT. Therefore, for detailed operation, reference should be made to the 19-inch tubes. The following discussions are limited to the differences only. Figure 2-7 is a cutaway view of the 7-inch SD CRT, showing the location of the character matrix and the focus coil.

Refer Fig.
2-7
Page 0410

2. Auxiliary Focus Coil

a. The object of this additional coil, as previously stated, is to ensure sharply defined displays necessary for reproduction. It does this by realigning the electrons diverging from the beam proper. These electrons would normally be projected as blurred, indistinct images. With the aid of the auxiliary focus coil, the projecting and deflected electrons are compelled to follow a path that will make them meet with the main body or beam of electrons that come into the focus coil field. See figure 2-25. The size of this path is such that electrons which are far off the longitudinal axis of the beam will come into the magnetic field almost parallel to the axis. All electrons will now be heading directly toward the cross over point with the same velocity and at the same time. If all the electrons now require the same length of time to pass through the magnetic field, they will meet at a common point. If the strength of the magnetic field is adjusted so this common point is at the fluorescent screen of the tube, the beam will be sharply defined and capable of being recorded for large-screen projection.

Refer Fig. 2-25
Page 0410

b. As is the case with the convergence coil, or any device producing a magnetic field, a spiral rotation is imparted to the electron beam by the focus field. This is offset by an opposing field produced by a bucking winding of the dual-winding focus coil. Therefore, no additional compensation for rotation is necessary for the focus-coil effect.

3. Character Matrix Location

a. The location of the character matrix is not the same as it is in the 19-inch SD CRT. The placement of the 7-inch matrix in the center of the convergence field was again an effort to obtain maximum display recording quality.

b. Ideal character-forming of the beam is accomplished if the electron beam enters the character matrix perpendicular to the plane of the matrix. This, of course, is the logical physical placement for electron-beam character-stenciling, with minimum distortion. As shown in figure 2-16, the electron-beam enters the convergence field at a deflection angle. However, in the center of the field the angle of deflection becomes zero, and the electron beam is parallel to the axis of the tube. It is at this point in the field that the character matrix in the 7-inch SD CRT is located. The spiraling effect of the convergence field imparts a 90-degree rotation to the cross-sectional area of the electron beam.

Refer Fig. 2-16
Page 0270

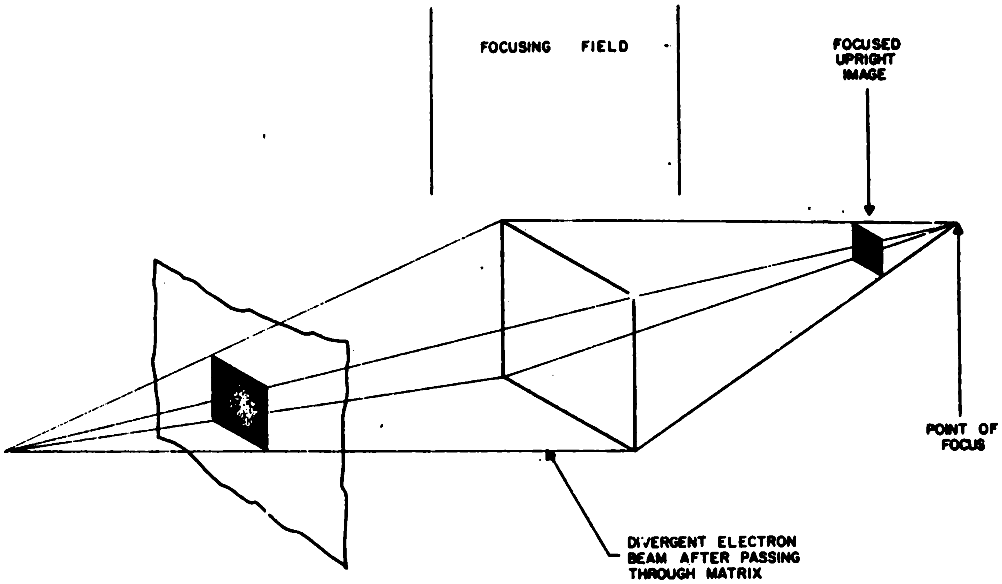

Figure 2—25. Focusing Coil Effect on Character-Formed Electron Beam

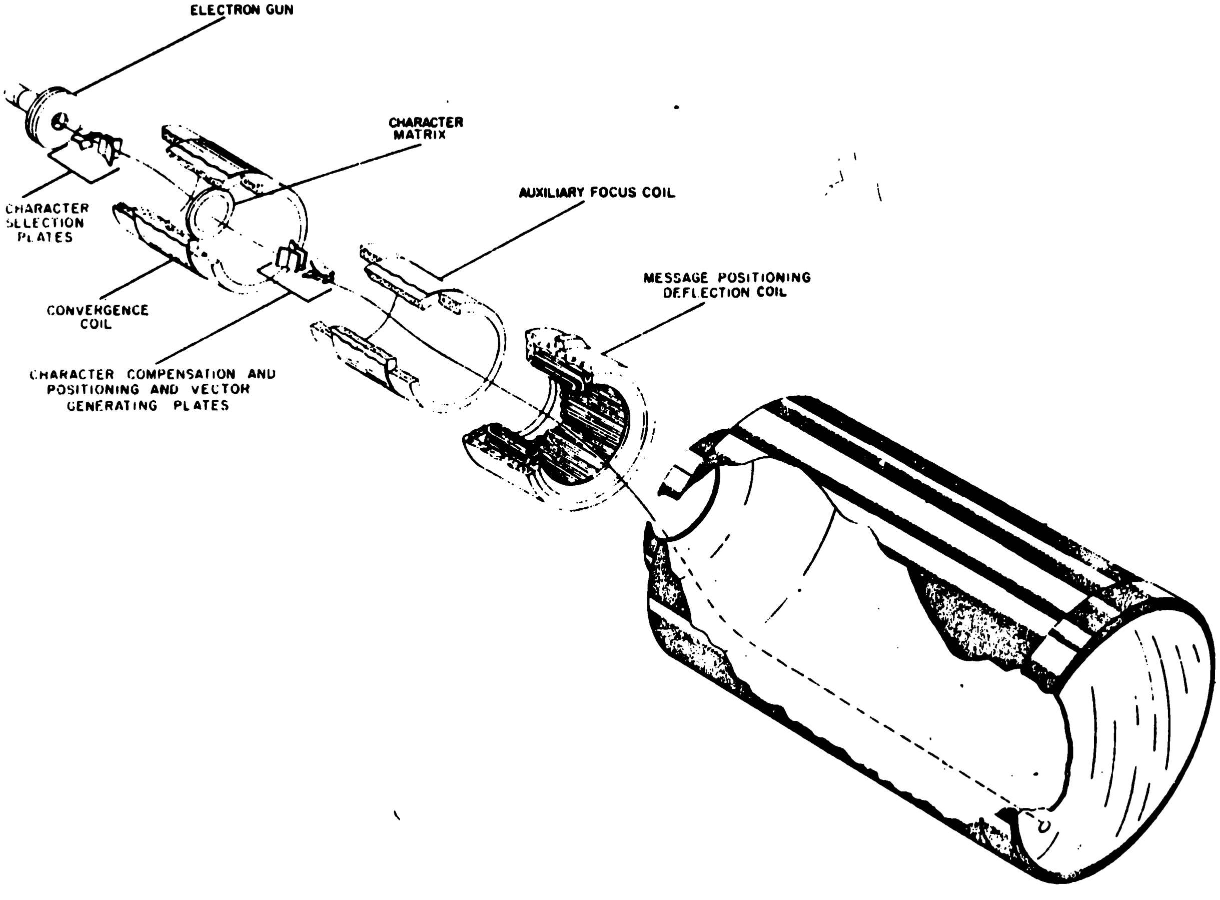

Figure 2—7. 7-Inch SD CRT, Cutaway View

Since the character matrix is located in the center of this field, the beam is rotated 45 degrees before it reaches the focus coil field. It will be remembered that the 19-inch SD CRT matrix was placed before the convergence coil field, thus imparting a 90-degree rotation to the emanating beam. In the manufacture of the 7-inch tube, the matrix is physically counter-rotated to its normal axis to offset the rotation of the beam, so that the image is upright on the viewing screen.

4. Convergence Coil

a. The 7-inch convergence coil has the same function as the 19-inch convergence coil. They differ only in the adjustments and physical method of coil placement about the neck of the tube. The 7-inch tube coil is mounted to an inner mu-metal shield which rides along a slot in the main shield by means of a screw-thread device. The point of convergence and isolation of the convergence field are established by the manual-positioning of the convergence coil. The coil mount is designed to accomplish this with a minimum of adjustment.

b. In addition to the differences already mentioned, the convergence coil on the 7-inch CRT has an extra winding. This winding is a horizontal and vertical centering coil superimposed on the convergence coil. This coil, in the form of a quad pancake winding, is arranged so that the field of one pair of coils will affect the X axis of the electron beam; the field of the other pair, the Y axis. In this way, it is possible to control the yaw, pitch, and vertical and horizontal positioning of the electron beam. These controls bring the beam up into reference as required. The field strength adjustments of the vertical and horizontal centering coils are controlled from the operating position of the PRRE unit.

D. Summary Questions

1. The character selection plates are used to:

   A. Select desired character on matrix.
   B. Return beam to axis of tube.
   C. Rotate beam 90 degrees.
   D. Provide post acceleration.
   E. Blanks or unblanks electron beam.

2. (T or F) The vertical selection plates move the electron beam horizontally.

3. Which one of the following CRT elements is a part of the electron gun?

   A. Helical band.
   B. Accelerating anode.
   C. Matrix
   D. Convergence coil
   E. Trim coil.

4. For what purpose is the focusing anode used in the charactron?

   A. Narrows electron beam when selecting a character on matrix.
   B. Compensates for the rotation of the beam caused by convergence coil.
   C. Receives the step voltages sent when displaying a format.
   D. Widens beam when selecting a character on the matrix.
   E. Blanks or unblanks the electron beam.

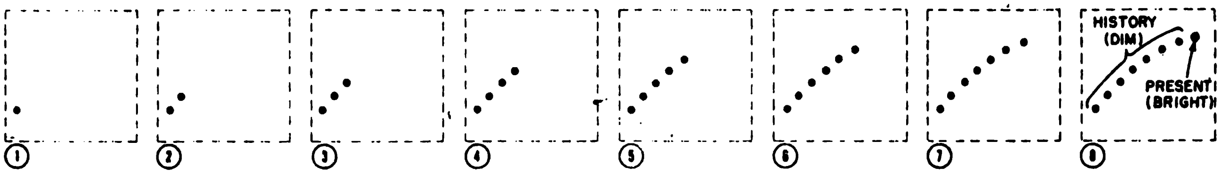

NOTE:

1. PRESENT RD-MESSAGE SYMBOLS ARE DISPLAYED BRIGHTER BUT NOT LARGER THAN HISTORY RD-MESSAGE SYMBOLS.
2. SYMBOLS APPEAR EVERY 1/8 SECOND ON THE AVERAGE. DISPLAY OF NEXT PATTERN STARTS AFTER APPROXIMATELY 2-2/3 SECONDS; EITHER REPEATING PREVIOUS PATTERN OR REPORTING A NEW PRESENT POSITION.

Figure 4—11. Evolution of a Pattern of RD Messages

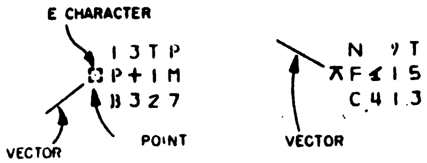

Figure 4—2. Typical TD Tabular Track Message Displays

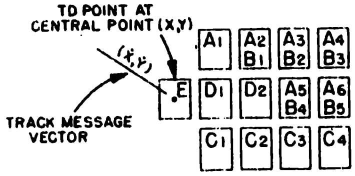

Figure 4--5. TD Tabular Track Message Format

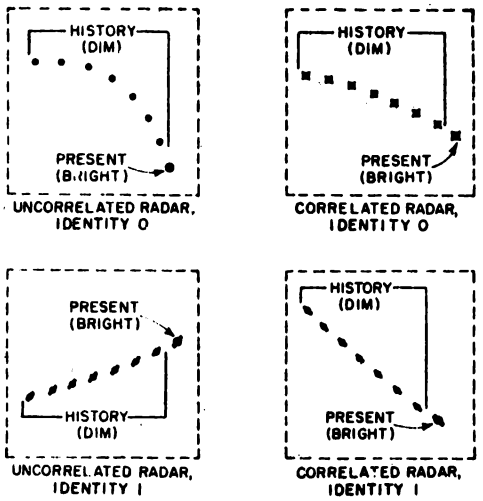

NOTE:

PRESENT RD-MESSAGE SYMBOLS ARE DISPLAYED BRIGHTER BUT NOT LARGER THAN HISTORY RD-MESSAGE SYMBOLS.

Figure 4—12. RD Message Displays, Showing Samples of the Eight RD Categories

III MESSAGE TYPES

A. General information - All SD messages originate from the RD and TD drum fields. An RD message consists of one RD drum word (24 bits). During the RD portion of the SD cycle, these messages are sent to the Display System at a 60 us rate. TD messages require 8 TD drum words. During the TD portion of an SD cycle, these messages occur at a 1040 us rate.

B. Radar messages - There are 9 RD drum fields. Eight of these fields are used for display purposes while the ninth is being written on by central computer. The fields that are displayed are rotated with the one being written on. As an example --

1st Cycle - Read fields 1-8; Write on 9
2nd Cycle - Read fields 2 - 9; Write on 1

The last field read represents present radar information and is distinguished from the remaining 7 by being displayed bright. The 7 fields that are displayed dim represent radar history. Hence the radar displays indicate the age of a track in the AN/FSQ-7 system and might be used to determine evasive manuevers of an aircraft.

Refer:
Fig. 4-11
Page 0440

There are 4 symbols that can be displayed bright or dim which are associated with RD messages. These symbols are selected from the SD matrix according to combinations of L 14 & L 15 of the RD message. The symbols are used to indicate whether the radar return has been assigned a track number (correlated or uncorrelated) and the means by which the aircraft was detected (MKX or search). A cross reference between the symbols and their meaning is listed below:

Refer:
Fig. 4-12
Page 0440

L 14	L 15	Meaning
0	0	Uncorrelated; Search or Identity 0
0	1	Correlated; Search or Identity 0
1	0	Uncorrelated; MKX or Identity 1
1	1	Correlated; MKX or Identity 1

Refer:
Fig. 4-12
Page 0440

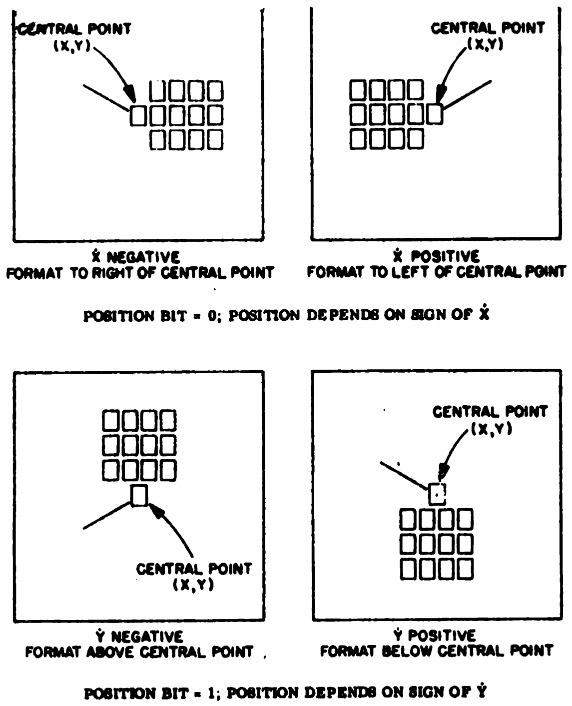

Figure 4–6. Format Positioning of TD Tabular Track Message

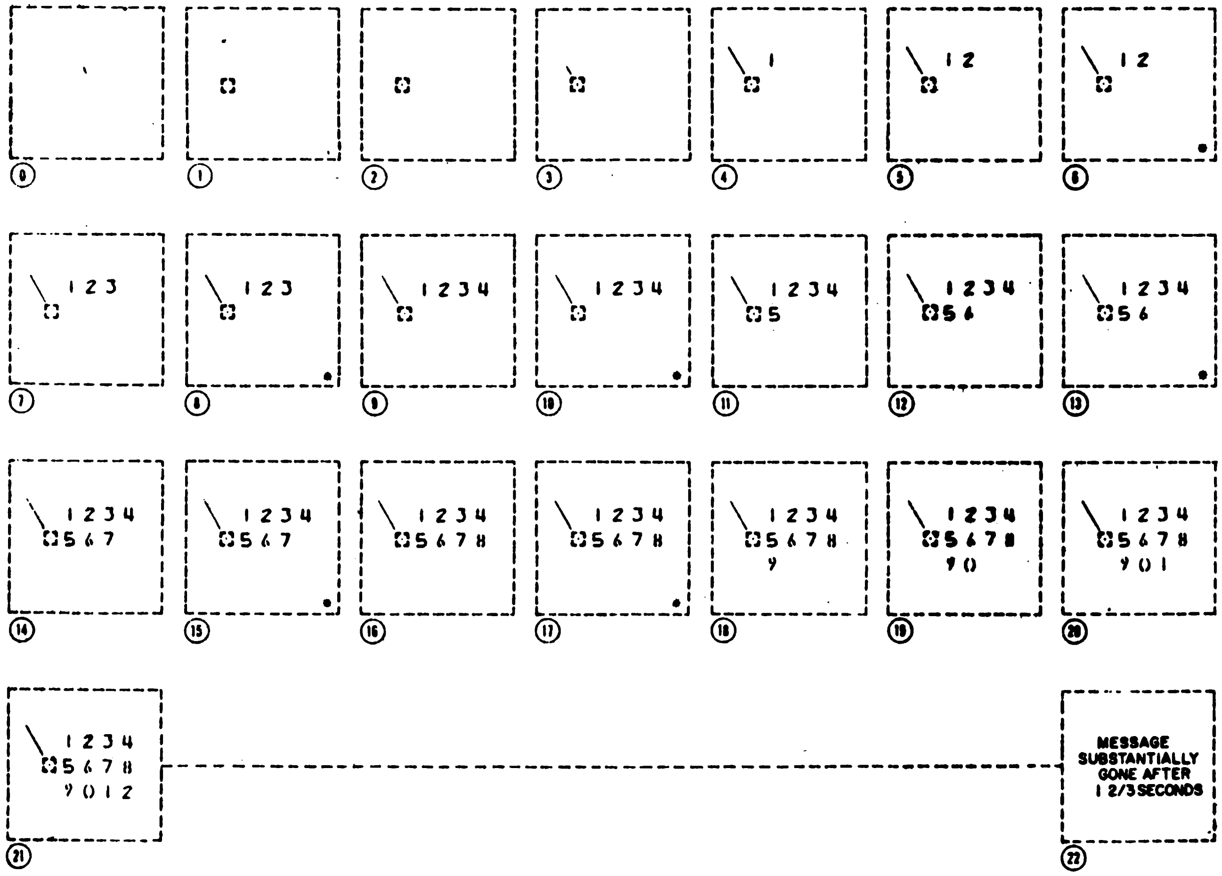

● NOTE: NO CHANGE IN THIS INTERVAL. (ALLOCATED TO DISPLAY OF ONE CHARACTER IN ALTERNATE (B) FEATURE GROUP).

Figure 4--7. Time Sequence of Character and Vector Generation for a Typical TD Tabular Track Message

The remaining 22 bits of an RD message are used to position the RD symbol on the face of the SD CRT.

An important fact to keep in mind concerning an RD message is that due to circuits in the SDGE, there must be at least one "1" bit in LS through L10 or it is not possible to have a display. The reason for this arrangement, is to prevent display of information from an erased RD drum.

C. Track messages - There are 6 TD drum fields which send messages to the SDGE for processing. These messages are broken down into two types; tabular (track or info) and vector messages.

1. Tabular track messages - The complete format pattern of a TD tabular track message when displayed on the SD CRT is shown in figure 4-5. Each box of the format represents one character of the message. Each character is identified by a letter with a numerical subscript to identify its position in the message.

   Refer: Fig. 4-5 Page 0440

   In this tabular track message format, each group of characters bearing the same letter designation is referred to as a feature. There are A, B, C, D, and E features, each of which contains information In addition, the point shown in the E feature is referred to as the point feature. The vector is an additional source of information, but is not considered a feature.

   Refer: Programming Data Card FED 299 for message layout

   The feature is significant in that it represents a particular type of air-defense information. The point feature represents the present location of an aircraft. The A, B, C, and D features represent other computer-resolved information about the aircraft, such as track number, velocity, and altitude. Although the vector is not a feature, its direction indicates the direction of the aircraft and its length indicates the speed of the aircraft.

   Particular features and characters may be omitted from a displayed track message at the discretion of the console operator. This is possible because the features are wired through selection switches at the SD consoles. With these selection switches, the operator can display or suppress any of the five features (A, B, C, D, and E) supplied to his console,

Figure 4–3. Typical TD Tabular Information Message Displays

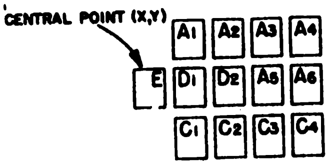

Figure 4–8. TD Tabular Information Message Format

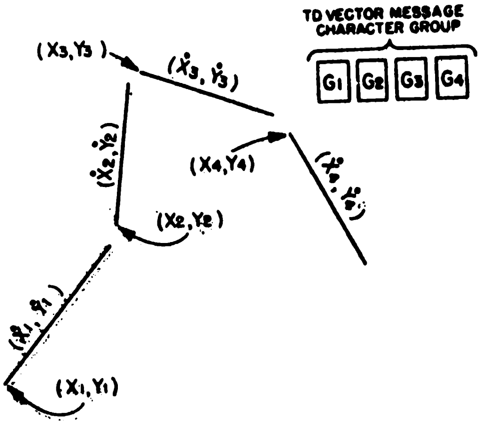

EACH OF THE FOUR VECTOR MESSAGE VECTORS CAN APPEAR WITH ANY ORIENTATION AT ANY CENTRAL POINT; MAXIMUM LENGTH APPROXIMATELY 2.1 INCHES. THE G CHARACTER GROUP OCCUPIES A DEFINITE POSITION WITH RESPECT TO THE CENTRAL POINT OF VECTOR 4 (X4, Y4).

Figure 4–9. TD Vector Message Display Format

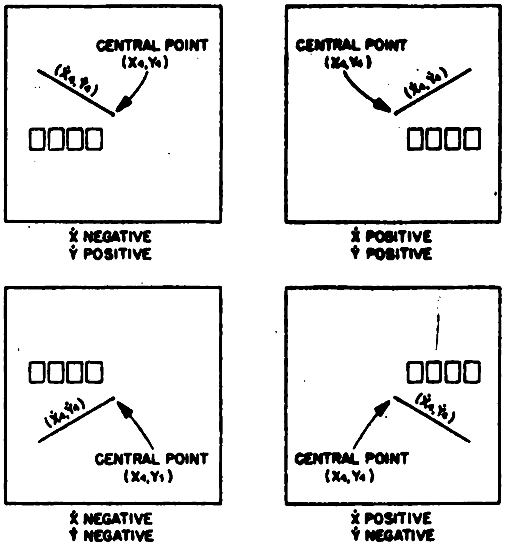

POSITIONS DEPEND ON SIGNS OF $\dot{X}_4$ AND $\dot{Y}_4$ (COMPONENTS OF VECTOR 4)

Figure 4–10. Format Positioning of TD Vector Messages

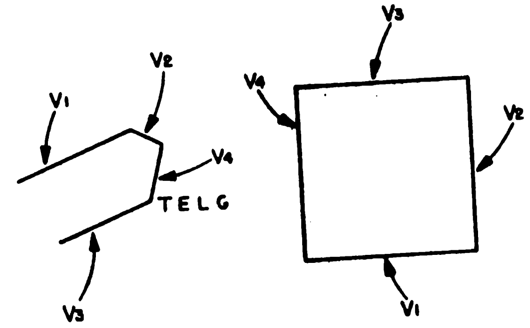

Figure 4–4. Typical TD Vector Message Displays

with the exception that both the A and F features cannot be displayed simultaneously.

A vector is started with its origin at the point feature and is swept some distance in a direction determined by the X and Y values of the vector. The direction that the vector is swept from the E feature (central point) partly determines whether the other features will be located left of, right of, above, or below the E feature. In any case, due to circuitry in the SDGE, it is impossible for a vector to cross the characters within the format. Message positioning in relation to the vector is also determined by a position bit generated by the computer. If this position bit is 0, the E feature is positioned left or right of the other features. Whether the E feature is positioned on the left or right, then, depends on whether the X value of the vector is positive or negative. If the X value is negative, the E feature is positioned on the left; if the X value is positive, the E feature is positioned on the right (see top portion of fig. 4-6). If the position bit is 1, the E feature is placed either above or below the rest of the features. The Y value of the vector determines this. If the Y value is positive, the E feature is placed above the rest of the features (see bottom portion of figure 4-6). The sequence in which the parts of the TD talular track message are generated is shown in figure 4-7.

Refer:
Fig. 4-6
Fig. 4-7
Page 0460

D. TD Tabular Information Message Display Format

1. As indicated in figure 4-8, the TD tabular information format is similar to that of the TD tabular track message. There are, however, two distinct and important differences. First, this format is different because there is no vector generated. Second, the character groups are not called features, they are not selected by the operator, and there are only four groups (A, C, D, and E). Otherwise, the TD tabular information message is similar to the TD track message.

Refer:
Fig. 4-8
Page 0480

E. TD Vector Message Display Format

1. Figure 4-9 illustrates the format for the TD vector message display. It shows the four vectors and the G character group. The four vectors are generated, and the character group is positioned in relation to the fourth vector.

Refer:
Fig. 4-9
Page 0480

2. Each vector is swept from a point of origin (central point) designated by X and Y, in a direction and for the distance determined by the X and Y values. The subscripts indicate the sequence in which the vectors are generated. Subscript 1 designates the first vector, subscript 2 designated the second vector, etc.

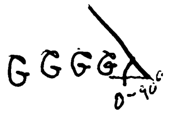

3. After the fourth vector has been generated, the four G characters are positioned adjacent to the point of origin (central point X4, Y4) of the fourth vector.

4. Relative positioning of the G characters in respect to the central point of vector 4 is determined by the values of X4 and Y4. Figure 4-10 shows the four possible positions of the G characters and lists the corresponding X4 and Y4 values needed for each position.

Refer:
Fig. 4-10
Page 0480

5. Due to circuitry in the SDGE it is impossible for the fourth vector to cross the "G" characters in a vector message.

F. TD Drum Word Layout (FED 299)

1. Tabular track

   a. Word 0:

      LS = 0
      L1 - L15 = X character selection of A1, A2, A3, A4 and E
      RS = 0
      R1 - R15 = Y character selection of A1, A2, A3, A4 and E

   b. Word 1 - used to position the message.

   c. Word 2, 3 and 4 - used to bring up CAT and DAB lines.

   d. Word 5

      LS = sign of the vector (X axis)
      RS = sign of the vector (Y axis)
      L1-L6 = magnitude of the vector (X axis)
      R1-R6 = magnitude of the vector (Y axis)
      L7-L15 = X character selection of C2, C3 and C4
      R7-R15 = Y character selection fo C2, C3 and C4

As an example, if LS of word 7 is a "1", the format will be positioned N or S. If RS of word 5 is a "1", this means the vector will sweep in a southerly direction and hence the format is positioned north of the E feature. If RS of word 5 is a "0" the vector will sweep northerly and hence the format is positioned to the south. When LS of word 7 is a "0", LS of word 5 is used to determine whether the format will be positioned east or west of the E feature. Hence it should be observed that it is impossible for the vector in a track message to sweep across the characters in the format.

L1-L15 = X character selection for D1, D2, A5, A6 and C1
R1-R15 = Y character selection for D1, D2, A5, A6 and C1

2. Tabular Info message - The layout of a drum message for a tabular info message is the same as that for a tabular track message and hence only the variations will be discussed.

   a. Word 0 - LS = 1

   b. Word 5 - There is no vector in a tabular info message but bits LS and RS can be used in conjunction with LS of word 7, to position the format N, S, E or W of the E feature.

   c. Word 6 - has no effect on a tabular info message

3. Vector message

   a. Word 0

      LS - no effect
      RS = "1"
      L1-L12 = X character selection for G1, G2, G3 and G4
      R1-R12 = Y character selection for G1, G2, G3 and G4
      L13-15 and R13-15 - no effect

   b. Words 1, 5, 6 and 7

      LS - L9 = X positioning bits for vectors 1, 2, 3 and 4
      RS - R9 = Y positioning bits for vectors 1, 2, 3, and 4
      L10 = sign of vector (X axis)
      R10 = sign of vector (Y axis)
      L11-L15 = magnitude of vector (X axis)
      R11-R15 = magnitude of vecotr (Y axis)

   c. Words 2, 3 and 4 - Bring up CAT and DAB signals.

NOTE:
LS and RS are used to determine the quadrant the vector will be swept in. L1-L6 and R1-R6 determine the length of the vector.

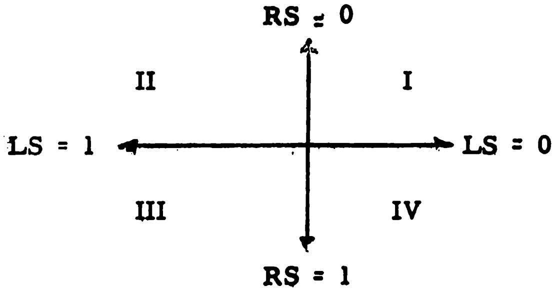

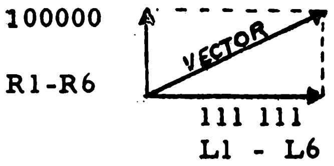

LS = 0 & RS = 0

e. Word 6

LS - determines whether a light gun can be fired at the track message

RS - not used

L1-L15 = X character selection of B1, B2, B3, B4 and B5
R1-R15 = Y character selection of B1, B2, B3, B4 and B5

f. Word 7

LS = determines whether the format will be positioned north or south, east or west of the E feature. This bit is used in conjunction with LS and RS of word 5.

G. Summary Questions

1. List the 4 message types used in SD.
2. What feature in a TD track message represents the geographic position of the track?
3. How many symbols are in a RD message?
4. How is the latest radar return represented on the SD CRT tube?
5. What is the max number of character presented on the SD CRT in a TD track message?

IV SITUATION DISPLAY CONSOLE

A. General Information

1. The situation display indicator element (SDIE) is made up of all the situation display indicator sections (SDIS's). The SDIS is primarily the SD CRT, with its associated circuits and controls. Information from the SDGE is displayed on the face of the cathode-ray tubes so that the operators can interpret the prevailing air defense area for interceptor flight-path instructions. Each SDIS is located conveniently for the operators at an SD console.

2. SDIS Inputs

   a. All the inputs to the SDIE come from the SDGE, either as information signals or control signals, except for one line from MDIE.

   b. The information signals consist of 34 signal lines of X, Y digital voltages (d-c levels of /10 or -30V) for use in positioning the SD messages on the SD CRT. Also included as information signals are the eight lines of analog voltages, four for positioning of characters and four for vector deflection.

   c. Control signals are distributed as d-c levels for use in generation and selection of displays.

   d. The following three signals are provided to enable SD CRT to display the SD message.

   1) One line--An intensify signal during character or vector display.

   2) One line--A defocus signal during character generation (except for point and vector generation

   3) One line--A focus signal during vector generation

e. The following types of signals (also d-c levels) are distributed to the consoles to enable the selection of the various types of situation displays:

   1) Seven lines--Features (to all consoles)

   2) Thirty-one lines--track categories (including one test category)

   3) Ninety lines--DAB's

   4) Up to 45 lines--Mixed TD category of DAB's (supplementary drivers)

   5) Two lines--Mix all categories; mix all DAB's

f. Of the possible 188 DAB and CAT lines, a maximum of 27 may be brought into any single console. All remaining signals to the SD console are concerned with the generation and positioning of the individual message.

3. Situation Display CRT

   a. The SD CRT is capable of displaying a number of different types of information. It can generate vectors to indicate aircraft direction and speed, aircraft flight plans, and geographical borders. It can also generate characters to indicate information about an aircraft, intercept point, geographical object, etc. The information supplied is constantly redisplayed in a cyclic manner to keep the SD CRT up to date with the latest information being received by the SD subsystem.

   The complete operation of the SD CRT is explained in Section II

B. BASIC THEORY OF OPERATION

1. The SDIE is broken down into its logical functions. These functions are illustrated in figure 4-13. A more detailed discussion of each functional unit in the block diagram will be later in lesson plan.

Refer Fig. 4-13
Page 0560

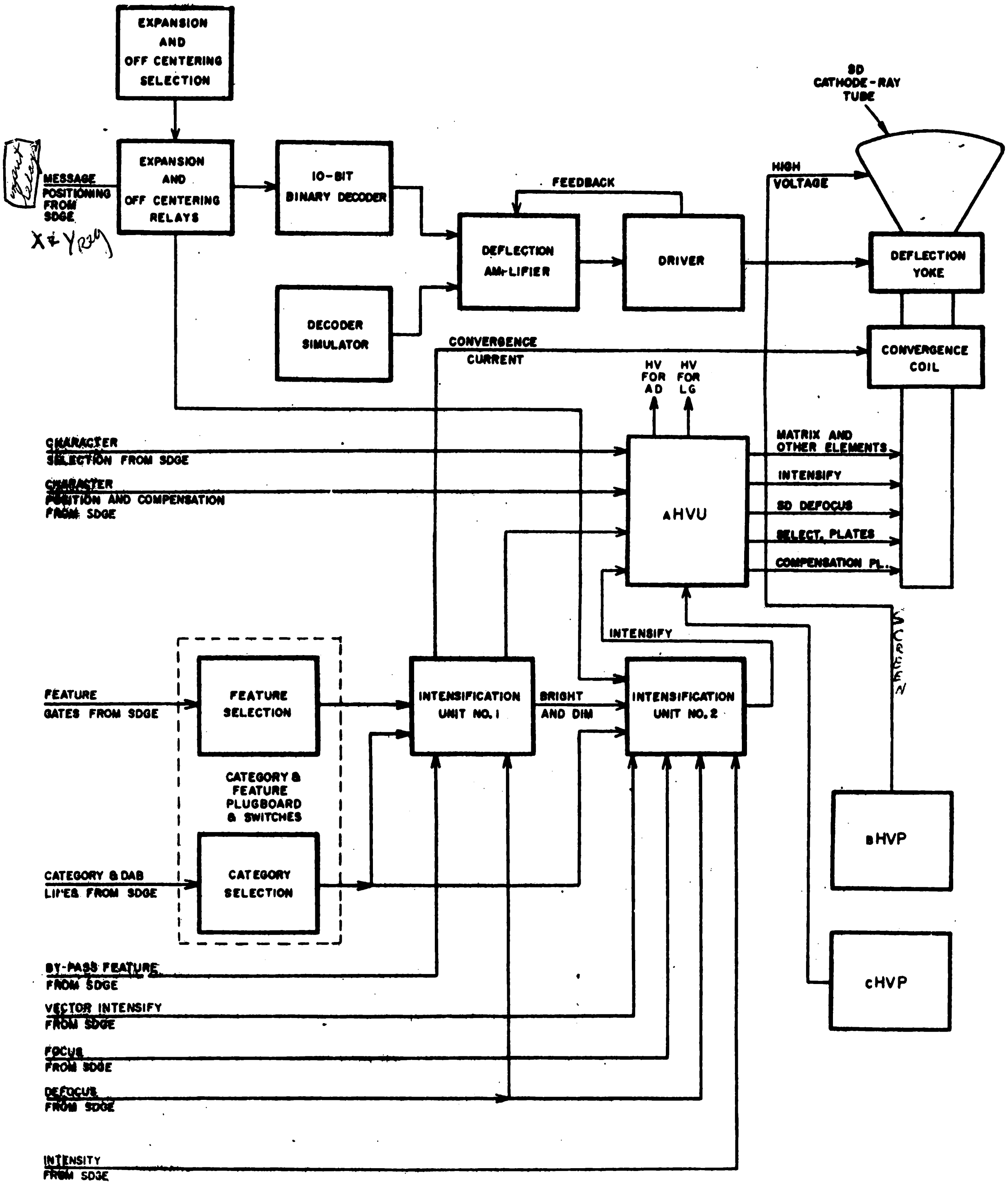

Figure 4—13. Situation Display Indicator Element, Simplified Flow Diagram

2. The messages received from the Drum System by the SDGE consist of eight digital words (TD message), or one digital word (radar track message). When the message goes to the SD console, it is composed of both digital and analog signals. Of these, a certain number are information signals, and a certain number are control signals. The information signals are of two kinds, digital and analog. For instance, the character selection and position signals are analog, while the message positioning signals are digital. The Control signals are all digital signals consisting of feature, and CAT and DAB gates which determine whether the message can be displayed at a particular console. Thus, the control signals within a message determine whether the message can be displayed at a particular console. Thus, the control signals within a message determine whether the information signals within the message can be displayed.

3. Character Selection

   a. The bits of a message that select a character are decoded (changed from digital to analog voltages) in the SDGE. The resulting analog voltages are applied to potentiometers within the high-voltage unit of the SD console. The voltages from potentiometers in a push-pull arrangement are applied to the selection plates of the SD CRT. The voltages on the selection plates deflect the electron beam to the proper place on the character matrix. The portion of the beam passing through the matrix is shaped in the form of the desired character. That portion of the beam which does not pass through the matrix and passes off as a matrix current.

4. Character Positioning and Compensation Plates

   a. The second set of plates in the SD CRT places the character-shaped electron beam in a specific position with respect to the message being displayed. If a vector is to be displayed, this second set of plates sweeps the electron beam (in this case, a focused beam) the desired length and direction.

These plates also compensate for any off-centering of the character-shaped electron beam caused by the character selection described above. The Character-positioning analog voltages for the second set of plates come from two sets of potentiometers which are set up in a push-pull arrangement similar to that used for the character selection plates. These potentiometers are also located within the high-voltage unit. The character-positioning voltages are obtained from decoders within the SDGE.

5. Message Positioning

a. Because of the great variety and quantity of information which will be displayed on the SD CRT, the individual console operator required different expansion scales so that he may observe enlarged displays of particular areas of interest. For this purpose, OFF - CENTERING pushbuttons and an EXPANSION control are provided on the front of the console.

b. Expansion Scales

1) The basic scale of expansion is designated as X1 (times 1). This is also called the frame of reference or unexpanded display. The X1 display can be expanded into X2, X4, and X8 displays.

2) If the X1 display is visualized with X and Y axes superimposed on the face of this SD CRT, all messages will be positioned with respect to the intersection of the two axes. This positioning information is contained within each message in the form of X- and Y-positioning bits. When an X2 expansion is being observed, the same SD CRT area is used to display 1/2 the X-axis distance and 1/2 the Y-axis distance that is represented by the X1 display. Thus, only 1/4 of the

original geographic area can be seen, so that the messages appearing in that particular area will be further apart and can be interpreted more easily. In a similar manner, the X4 expansion presents only 1/16 of the original area for display or 1/4 of the X2 display. The X8 expansion displays only 1/64th of the original X1 display.

3) Of the four scales described, only three can be selected at any one SD console. The three scales selected are determined by how the expansion and off-centering rotary switches (S71, S72, S73, and S74), at the rear of each console, are positioned. The 3-position EXPANSION switch (S28) is used to select contracted (CNTD), normal (NORM) or expanded (EXPD) displays. In most cases, each switch position will select a scale not used on another switch position, the CNTD display will usually be a lower expansion scale than NORM, and NORM will usually be a lower expansion scale than EXPD. CONTRACT AREA switch (S71) allows for expansion scales X1 or X2 in the CNTD position. SCALE switch (S72) makes possible X1, X4, or X8 in the EXPD position. Provision for X1 is not made in the EXPD position since off-centering is not possible in the X1 expansion. Therefore, the CNTD scale will never be X8, and the EXPD scale will never be X1, since no off-centering would be possible under these circumstances.

4) Expansion and off-centering do not affect the character size or spacing between the characters of a message because the digital voltages of word 1 (which are used to position the entire message on the face of the SD CRT) are processed for expansion separately from the bits that are used for positioning each character within the message. The latter are actually decoded in the SDGE and arrive at the SD console as analog voltages. In the case of a TD vector message, however, the spaces between the vectors will vary with the expansion, although the size of the vectors will not be altered by the particular expansion level.

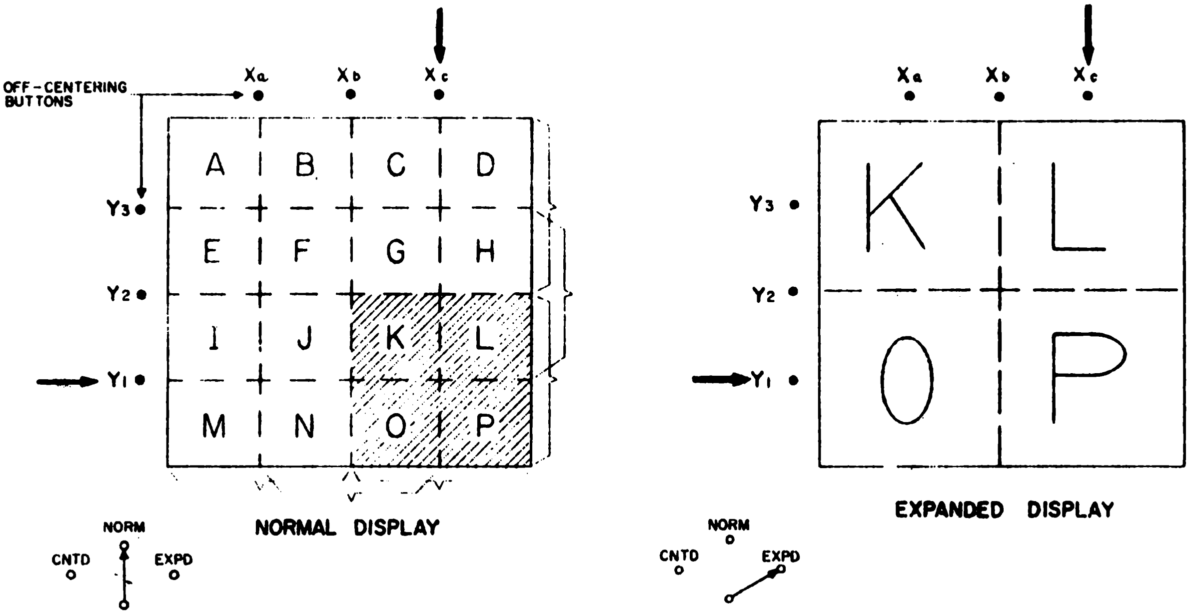

a. X2 EXPANSION

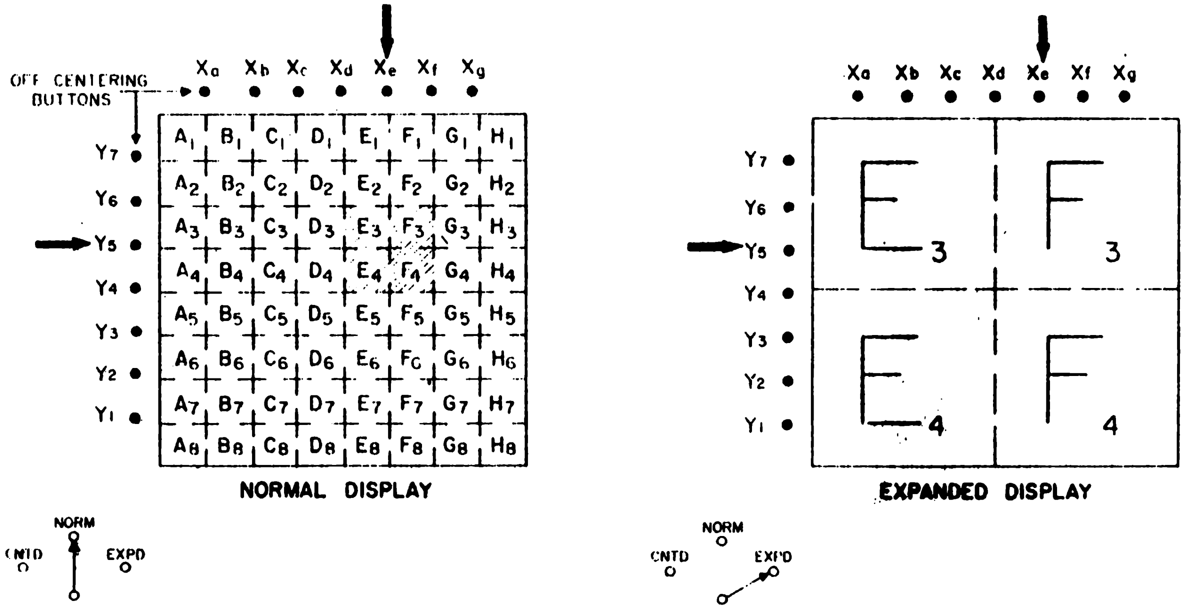

b. X4 EXPANSION

Figure 4–15. Off-Centering and Expansion Areas (X2 and X4)

c. Off-Centering

1) Expansion and off-centering rotary switches (S71, S73, and S74) determine the off-centering positions for CNTD and NORM displays. If, for instance, the CNTD display is an X2 expansion, the segment of the X1 display which will be viewed when in the CNTD position will be independent of operator control. The X1 segment will have been selected by maintenance personnel by setting CONTRACT AREA switch S71.

2) The operator will, however, be able to select a particular segment of the NORM display for expanded viewing on the EXPD display . A maximum of 14 OFF-CENTERING buttons is provided on the front panel of the console for this selection, seven along the top of the SD CRT, and seven along the left side of the SD CRT. These controls are shown in Figure 4-14.

Ref fig. 4-14
Page 0630

3) If the EXPD scale is four times that of NORM scale, only three of each set of seven pushbuttons will be available to the operator. The other four will not be available. Figure 4-15, A, shows a display wired so that X2 expansion appears with the EXPANSION control switch at NORM. If we divide this area into sixteenths (four of which can be picked for display when the EXPANSION control is set to EXPD), it can be seen that there are nine areas that can be expanded to twice the NORM size: ABEF, CDGH, IJMN, KLOP, BCFG, JKNO, EFIJ, GHKL, and FGJK. Note that this allows a 50 percent overlap between sections. Observe, also, that the intersection of a vertical line drawn from the top OFF-CENTERING pushbutton on the side would intersect at the center of the selected area.

Refer fig. 4-15
Page 0600

4) To select the shaded area of figure 4-15 A, for expansion, pushbuttons Xc and Y1 are despressed, and the EXPANSION control is turned to EXPD. In this case, the EXPD position displays a geographical area 1/4 the

size of the area of the normal display. In B, of fig. 4-15 however, the NORMAL display is an X4 scale of the frame of reference; the EXPD display is covering an area 1/16 that of the frame of reference.

5) A maximum of seven pushbuttons along the X-axis of the display and seven along the Y-axis provide a maximum of 49 possible areas of expansion (figs. 4-14 and 4-15), when turning from a NORMAL display to an EXPD display.

6) The rotary switches (or plugboard, where these are still used) are located in the rear of the console. These switches or plugboards also control the level of expansion to which a particular console has access. The situation display console operating controls are shown in figure 4-14.

d. Expansion Relays

1) The message positioning bits go first to the expansion relays which are controlled by the EXPANSION switch (S28). CONTRACTED AREA switch (S71), SCALE switch (S72), NORMAL AREA switches (S73 and S74), and OFF-CENTERING buttons. Of the 26 positioning bits that come in, 13 are for X-axis positioning and 13 are for Y-axis positioning. For any particular expansion 10 of the X bits and 10 of the Y bits are selected. A different set of 20 bits is used for each individual expansion. The relays which select the 20 bits direct these bits to the 10-bit binary decoder (which accepts 10 bits for X and 10 bits for Y positioning), where the digital voltages are converted into analog voltages for use in the SD CRT. In addition, the intensification signal is gated into intensification unit 2. The gating of this signal in the intensification unit is determined by the operation of the expansion and off-centering relays in order to produce intensification on the face of the SD CRT for only those messages that fall within the expanded area. All other messages are not intensified.

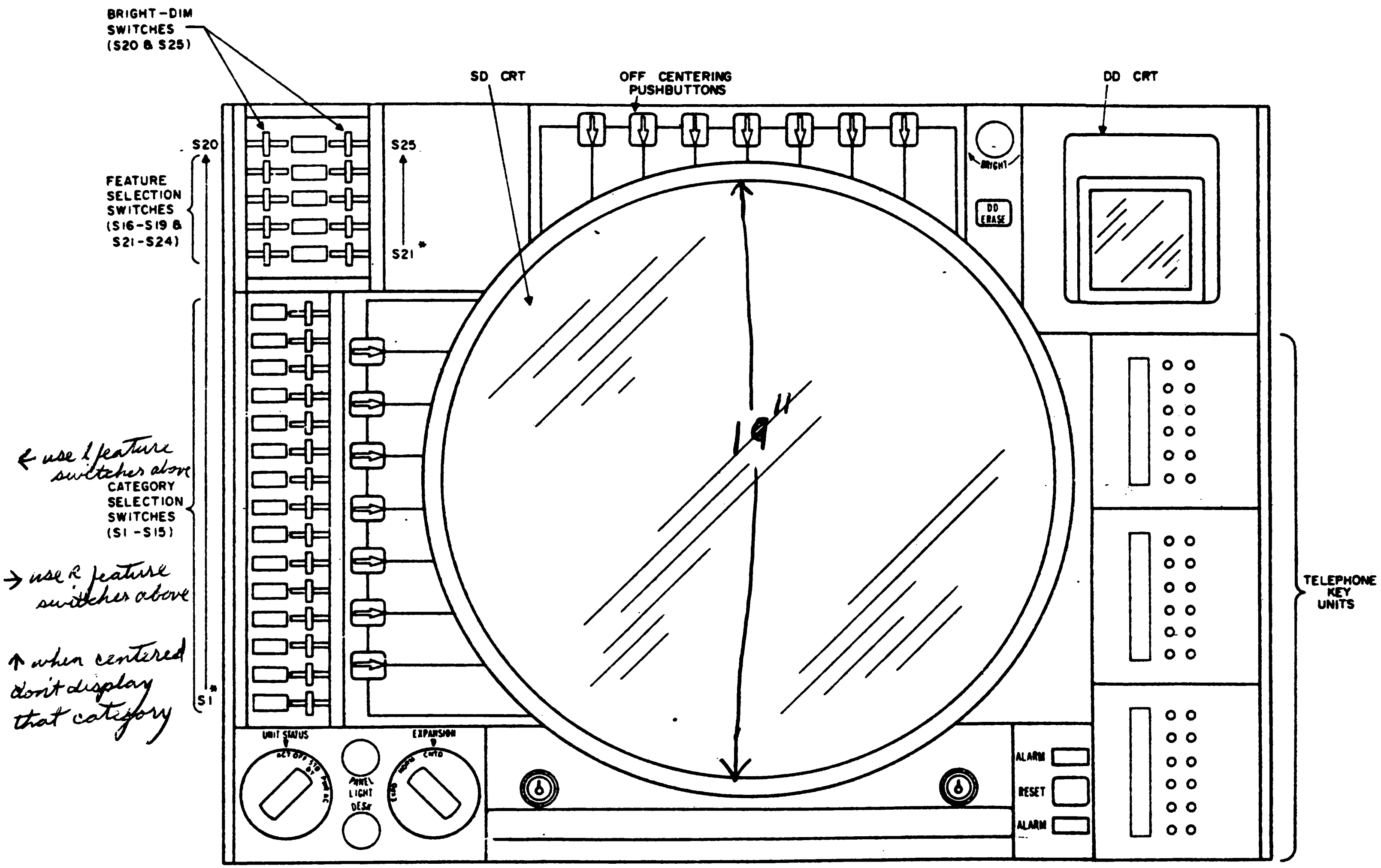

← use L feature switches above

→ use R feature switches above

↑ when centered don't display that category

*SWITCH NUMBERS ARE SHOWN FOR IDENTIFICATION PURPOSES ONLY;
THEY DO NOT APPEAR ON THE FRONT PANEL OF THE SD CONSOLE.

Figure 4—14. Situation Display Console, Operating Controls

e. Ten-Bit Binary Decoder

1) The function of the decoder is to convert the digital voltages (the voltages are the positioning bits) into analog voltages for positioning the messages on the viewing screen of the SD CRT. The decoder consists of two identical sections, one for X positioning and one for Y positioning. Each half accepts 10 input digital voltages and combines them to form one analog output voltage. For instance, if all the input bits to the X section are 1, the analog output will be +150V, corresponding to a message position on the extreme right side of the tube. If all the input bits are 0, the analog output will be +100V, corresponding to the extreme left side of the tube. Various combinations of input bits will produce analog outputs between these two values; +125V would then be the center of the tube in the reference plane. A net change (differential output) of 50V is therefore required to produce deflection from one end of the SD CRT to the other.

   The decoder is also connected to the decoder simulator which is a circuit similar to the decoder but which has no signal input. The decoder simulator is located in a pluggable unit directly beneath the decoder. Both decoder and decoder simulator are powered from the same B+ supply; any variation in the B+voltage will be reflected equally in the outputs of the decoder and decoder simulator. Both of these outputs are fed to the deflection amplifier (described below in 2. 2. 3. 5). The deflection amplifier has been designed so that it will not be sensitive to signals appearing on both inputs (from decoder and decoder simulator). Thus, any variation appearing on the decoder output due to B+ variation will also appear on the decoder simulator output, and the deflection amplifier will not respond to this variation. Message-positioning will therefore be independent of supply voltage variations.

f. Deflection Amplifiers and Deflection Drivers

1) The deflection amplifiers amplify the X, Y outputs of the binary decoder. The amplified outputs are fed to a deflection driver unit which contains cathode follower power amplifiers. The resultant output, in turn, drives the deflection yoke (located around the neck of the SD CRT), and positions the SD message on the viewing screen of the CRT. One deflection amplifier and one channel of the driver constitute a feedback system which is used to maintain accuracy and stability of amplification.

6. SDIS Selection

a. There are great quantities of messages on the air defense situation of the geographical area covered by the AN/FSQ-7 and -8. These messages would be too many in number to be usefully displayed on the viewing screen of any one SD CRT. For this reason, all SD messages are classified in many ways so that a given console receives only those messages for which it has a tactical use.

b. Categories

1) One method used by the Central Computer in differentiating between messages involves placing each SD message in one of a possible 40 (32 TD and 8 RD) basic categories. Each console is assigned a certain number of categories, receiving only those categories which are required by the operator for performing his tactical duties.

2) Those categories that are assigned are routed through CAT switches on the front panel of the SD console so that the operator has control over whether the messages in a particular category will be displayed or not displayed. Only category 1 (test category) cannot be selected at the front panel of the SD consoles.

3) Bits LS through L4 of word 2 of a tabular or vector message are used to identify the category of the message. These five bits can be used to count 32 since there are 32 combinations of 1's and 0's possible with the five bits. Category 0 containing 0's in all five bit positions, is referred to as a null category. This category is used only when a display assignment bit (DAB) is assigned to a message.

4) There are also eight radar categories, identified by bits L14 and L15 of an RD message and an RD-dim-RD-bright signal.

5) Although all the information signals (character selection, character position, etc.) of a particular TD or RD message arrive at every SD console, the message will not be displayed on the SD CRT unless the category bits of that message form a combination that is assigned to the particular console. In addition, the CAT switch must be turned to its ON position. Each CAT switch has two ON positions, immediately to the left and to the right of center (OFF position). The ON position on the left permits the CAT switch to function in conjunction with one bank of feature selection switches, while turning the category switch to its other ON position (on the right) allows it to function with the other bank of feature switches. (In the case of RD messages and geography TD messages, the CAT switch position is of no consequence.)

c. Display Assignment Bits

1) In addition to selection by category, a message can be selected by means of a DAB. Each DAB has a permanent relationship or assignment to one or more consoles. Thus, if the Central Computer System is impelled to display a message at a specific console, it places a 1 in the assigned DAB for that console in the message.

2) There are two types of DAB messages; forced and selected. A forced DAB message is automatically displayed at the assigned console; a selected DAB message is routed to a specific console where the operator has the option of switching the message on or off. The CAT selection switches are used to control selected DAB messages.

d. Mixed DAB's and CAT's

1) In addition to the 40 basic categories and the 90 DAB's, up to 45 supplementary drivers (CAT's, DAB's, and mixed CAT's and DAB's) may be created in the SDGE. The mixing of CAT's and DAB's can be accomplished either at the SDGE or at the consoles, although the 45 supplementary drivers, referred to here, are obtained by mixing in the SDGE.

e. DAB and CAT Inputs to Consoles

1) There are 27 input lines to each console which may be used to bring DAB's and CAT's to the console. The assignment of these lines differs from console to console and is a function of the tactical requirements of each individual console.

f. Feature Selection

1) Feature selection (applicable only to TD tabular track messages) enables the operator to select portions of the messages selected at the CAT switches. Five input lines to the consoles carry features A through E to the feature switches. These switches govern which of the features (in the messages selected by the CAT switches) will be intensified on the SD CRT. When a feature is selected by a feature switch, the feature gate is transmitted to the intensification circuits so that the SD CRT will be intensified during the time of display of the feature.

2) The feature switches are located in two banks of four switches each at the upper left corner of the console front panel. Each bank functions independently of the other and is associated with one of the two ON positions of the CAT switches. One additional switch is located above each bank of feature switches. This is the BRIGHT-DIM switch; it controls the intensification level of the features that are selected by the associated bank of feature switches.

7. Intensification

a. Message selection by means of CAT's and DAB's, and feature selection and expansion of the display are implemented by the intensification circuits. Those messages (or features of messages) which are not intended for display at a particular console are sent to the console, nevertheless; but they are not intensified. Should the tactical requirements of a particular console change so that the console requires a different category of message (or different feature assignments), it becomes a simple matter to alter the incoming control signal lines to the intensify circuits so as to produce illumination of the desired messages.

b. In the case of expanded displays, the messages which fall in the geographical areas outside the expanded area being viewed are still brought to the console. However, the geographical information produced in the expansion circuits is sent to intensification unit 2 so that only those messages in the expanded area will be intensified.

c. Intensification Unit 1

1) The functions of this unit are as follows:

a) Intensification of selected features (with intensification unit 2).

   b) Application of regulated current to the SD CRT convergence coil for optical focusing of the electron beam so that the characters will not appear blurred.

   c) Intensification of bypass feature (with intensification unit 2).

   d) Application of a defocus gate to the first anode of the SD CRT to defocus the electron bean before it reaches the character-forming matrix, for all characters except point and vector.

d. Intensification Unit 2

   1) This unit functions with intensification unit 1 and four input gates to the SD console to produce intensification of all points and characters scheduled for display on the particular console.

8. High-Voltage Power Supplies

   a. There are two high-voltage power supplies in the SD console: HV power supply B and HV power supply C. The model B supply produces high voltage for the second anode of the SD CRT. The model C supply produces the supply voltages for the cathode and control grid of the CRT. The filament voltage for the CRT is obtained from the high-voltage unit.

9. High-Voltage Units

   a. High-voltage unit, model A, supplies the SD CRT circuits with most power requirements. Both major signal and power needs are routed through this unit.

   b. The functions of the model A high-voltage unit are as follows:

      1) Provides taps on the high-voltage supply bleeder for the light-gun and area-discriminator high-voltage requirements.

2) Provides the input network for a convergence current regulator that generates a voltage proportional to SD CRT accelerating voltage, by means of which the convergence coil current is regulated.

3) Contains the amplitude adjustments for horizontal and vertical centering controls for character compensation and selection.

c. The unit is mounted so that the controls are located on the subpanel of the console.

C. Detailed Theory of Operation

1. Input Signal Switch Relays

a. Purpose - Select Signals from Units 24A or 24B.

b. Controlled by Unit Status Switch

c. Input Signals and their function

1) Deflection Bits - (34 Lines) - ≠10 or -30 volts.

a) LS-1 thru L12-1, LS-0 thru L3-0
RS-1 thru R12-1, RS-0 thru R3-0

b) Determines positioning of messages on tube.

c) Controls Intensification.

d) Wired to all SD Consoles.

2) Character Selection Signals (4 Lines) - Analog Signal

a) ≠X, -X, ≠Y, -Y

b) Select Characters on matrix

c) Wired to all SD Consoles

3) Character Position Signals - (4 Lines) - Analog Signal.

  a) +X, -X, +Y, -Y, +X, -X, +Y, -Y
  b) Compensate for character selection.
  c) Position characters within a message.
  d) Vector positioning signals to sweep vector.
  e) Wired to all SD Consoles.

4) Category and D.A.B. Signals - (27 Lines) - +10 or -30 volts.
  a) Used to control display of various messages.
  b) All 27 Lines not necessarily used.
  c) Category and D.A.B. Assignment varies between consoles.
  d) Signal at +10 volts for complete message.

5) Feature Signals (7 Lines) - +10 or -30 volts.
  a) A, B, C, D, C, Point and Bypass features.
  b) Used to control display of features within message.
  c) Wired to all SD Consoles.
  d) Signal at +10 volts for display of respective characters.

6) Intensity Gate Signal (1 line) - +10 or -30 volts.
  a) Controls display of each feature wired to all SD Consoles Signal at +10 volts for display of each character.

7) Defocus Gate Signal (1 line) - +10 or -30 volts
  a) Controls Beam width
  b) Controls Beam intensity
  c) Wired to all SD Consoles

d) Signal at +10 volts for display of characters. Signal at -30 volts for display of vectors and point.

8) Focus Gate Signal (1 line) - +10 or -30 volts.

a) Controls Beam Intensity

b) Wired to all SD Consoles

c) Signal at +10 volts for display of vectors and point.

9) Vector Intensity Signal (1 line) - analog signal

a) Controls Beam Intensity for Vectors

b) Wired to all Consoles

2. Character Selection

a. Characters are selected at the matrix by feeding appropriate x and y voltages to the character selection plates. These are obtained in the SDGE where digital voltages from the Drum System are changed into analog voltages. The analog voltages are fed to the character selection plates through potentiometers in the high-voltage unit. The potentiometers, labeled CHARACTER SELECTION CENTERING and CHARACTER AMPLITUDE, are used to adjust the voltages to the individual SD CRT characteristics.

b. In a quiescent condition (no signal input from the SDGE), the input voltage and the voltage at each of the selection plates is nominally +45V. The CHARACTER CENTERING potentiometers are adjusted, in practice, until the electron beam is centered on the matrix. The center position is indicated when a corner of each of the four centrally located characters appears on the viewing screen.

c. Character selection is a function of two pairs of voltages, one for horizontal and one for vertical selection. The pairs are fed push-pull to the horizontal and vertical character selection plates where they deflect the electron beam to the desired point on the matrix.

d. A potential of approximately 50V between plates (+25V fed to one plate and -25V fed to the other) is required for full horizontal selection. The actual voltages on the plates in this instance are +70V and +20V (+45V plus 25V on one plate; 45V minus 25V on the other). Intermediate deflections are linear with a nominal 14.5V difference in potential being required to deflect the electron beam horizontally for one character space.

e. Similarly, an approximate 90V potential between plates is required for full vertical selection. The actual voltages on these plates are, for full deflection, +90V (+45V and +45V) and 0V (+45V and -45V). Intermediate vertical deflections are also linear and require nominal 25V differences in potential to deflect the electron beam vertically for one character space.

3. Character Compensation

a. The electron beam must be recentered in order to compensate for the off-centering caused by character selection. This is done by feeding in character-spacing analog voltages and character compensation analog voltages from the SDGE. (The compensating voltages are opposite in phase to the character selection voltages). The compensation voltages are fed to the compensation plates through potentiometers in the high voltage unit which are similar to the CHARACTER SELECTION potentiometers. These are labeled CHARACTER COMPENSATION AMPLITUDE and CHARACTER COMPENSATION CENTERING and are used to adjust the compensation voltages so that, with no character-positioning signals, the character appears on the center of the SD CRT.

4. Switches

a. Category and DAB Switches

(1) Fifteen Switches (3 position)

Refer Fig 4-14
Page 0630

(2) Determines what categories of messages will be displayed.

(3) Wiring of CATS or DAB's to and from Switches done at Category Plugboard.

b. Feature Switches

(1) Two groups four each named FSS1 Group and FSS2 Group.

(2) Used to select for deselect characters within messages.

(3) Effects messages selected by category and D.A.B. switches.

c. Bright-Dim Switches

(1) Two Switches - One with each group of Feature Switches.

(2) Controls intensity of messages - Displayed Bright or Dim.

(3) Does not affect all messages displayed.

(a) Particularly R.D. messages

d. Expansion Switch

(1) Three Positions - Contracted, Normal, Expanded.

(2) Selects area to be displayed.

(3) Areas assigned to consoles according to operational responsibilities,

e. Off-Centering Pushbuttons

(1) Console can contain 14 (7X and 7Y) or 6 (3X and 3Y).

(2) Used to select expanded area.

(3) Effective when Expansion Switch is in Expanded Position only.

f.. Unit Status Switch

(1) Five Position Switch

(a) Off - no voltage or signal applied to circuits.

(b) A,C. - A.C. voltage from Standby Power Supply applied to circuits.

For detailed Power Sequencing See DDIE Master Lesson Plan

(c) PWR -D.C. and A.C. from Standby Power Supply applied to circuits.

(d) Standby - D.C. and A.C. from Standby Power Supply and Signal from Standby Computer applied to circuits.

(e) Active - D.C. and A.C. from active Power Supply and Signals from Active Computer applied to circuits.

5. CAT & DAB Plugboard Wiring

a. Each SD console is located at a different tactical station and each has its own specific category and feature assignments. In order to provide a flexible means for connecting the switches to the necessary signal lines, a control panel (plugboard) has been provided at the top of each console underneath the access door. When this control panel has been properly patched in, the console acquires the unique signal-handling properties that distinguish it from the other consoles in the Display System. This method also makes it relatively easy to change the switch assignments of a particular console, should the need arise.

Refer Fig 4-17 Fig 4-18 Page 0770

b. The category control panel is shown in figure 4-17. The schematic of the control panel is shown in figure 4-18 and the logic is discussed in 4.2.1. All the jacks shown on figure 4-17 are grouped into eight separate areas. With the exception of the group of spares, all areas are labeled. Each individual jack is identified by a number and a letter which do not appear on the actual control panel. In figure 4-17 there are nine columns, staring with column 1 on the right side. The rows of jacks are identified by letters, starting with A for the first row at the top.

c. CAT IN

(1) There are 27 jacks under the CAT IN label, corresponding to the 27 CAT and DAB lines available at each console. They are located in columns 4, 5, and 6. Some consoles will not have all 27 lines assigned to them; the maximum number (27) will appear only on those consoles with a full complement of lines.

(2) The category gates that appear at each of these jacks have

already passed the diode board (E21). A list of CAT and DAB assignments will accompany each console so that the categories can be wired to the jacks under the CAT SW label.

d. CAT SW

(1) The two fixed contacts of each CAT switch are connected to jacks marked a and c in columns 9 and 7, respectively. The movable contact is connected to jack b in column 8. Six jacks, arranged in two rows of three jacks each, are provided for each of the double-pole CAT switches (S2, S4, and S5). These rows are labeled 2A, 2B, 4A, 4B, 5A and 5B; the A's and B;s designate the two poles of the associated CAT switches.

e. DIODE

(1) Columns 2 and 3 contain jacks for 16 diodes that are located on diode board E21. These diodes are not employed as input diodes but are utilized as isolation diodes when patching the plugboard for the particular CAT and DAB assignments of the associated SD console.

f. EXPD

(1) These jacks (column 1) are connected to contacts of four of the sections of the EXPANSION switch. In each group of four jacks, the A jack is connected to an arm of the EXPANSION switch, while the B, C, and D jacks go to the three fixed contacts (CNTD, NORM, and EXPD, respectively) of that section.

(2) The expansion levels of the three positions of the EXPANSION switch are determined by the wiring of the expansion switches located in the rear of the console.

g. FEAT IN

(1) Five of the FEAT IN jacks receive the feature gates from the signal relay contacts. The sixth jack is connected to the point feature gate (jack U2); if the particular console has a light gun assigned to it, U2 is jumped to U1, thereby connecting the point feature to the intensification circuits. Jack U3 is connected to the spare feature line.

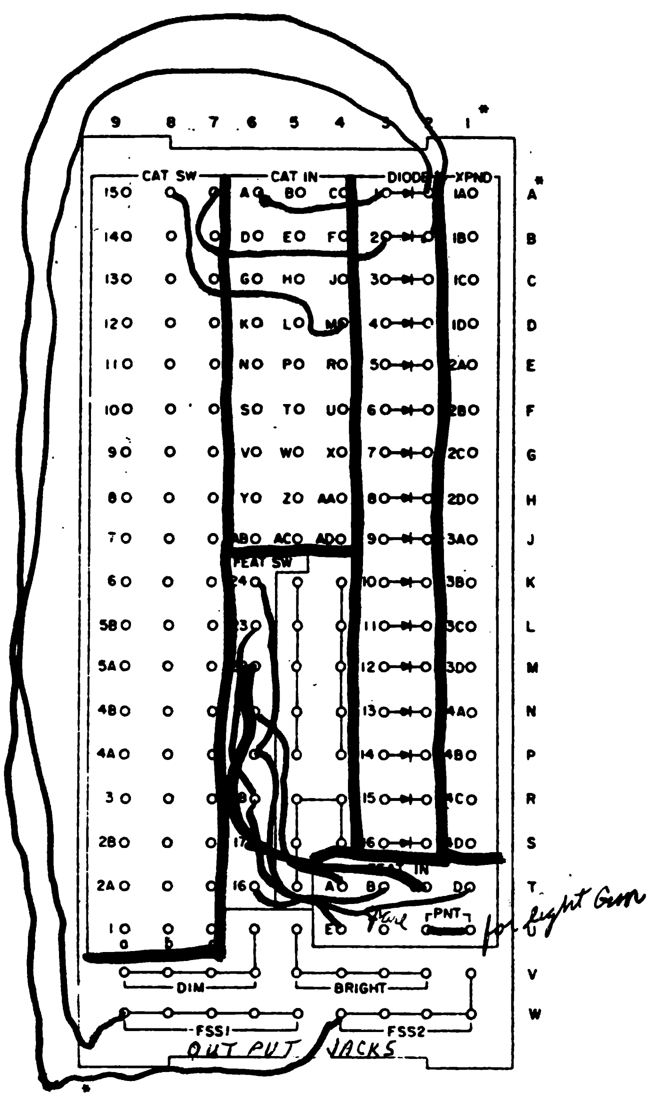

* THE LOCATION NUMBERS AND LETTERS ARE SHOWN FOR IDENTIFICATION PURPOSES ONLY; THEY DO NOT APPEAR ON THE PLUGBOARD

Figure 4—17. Category Control Panel (Plugboard)

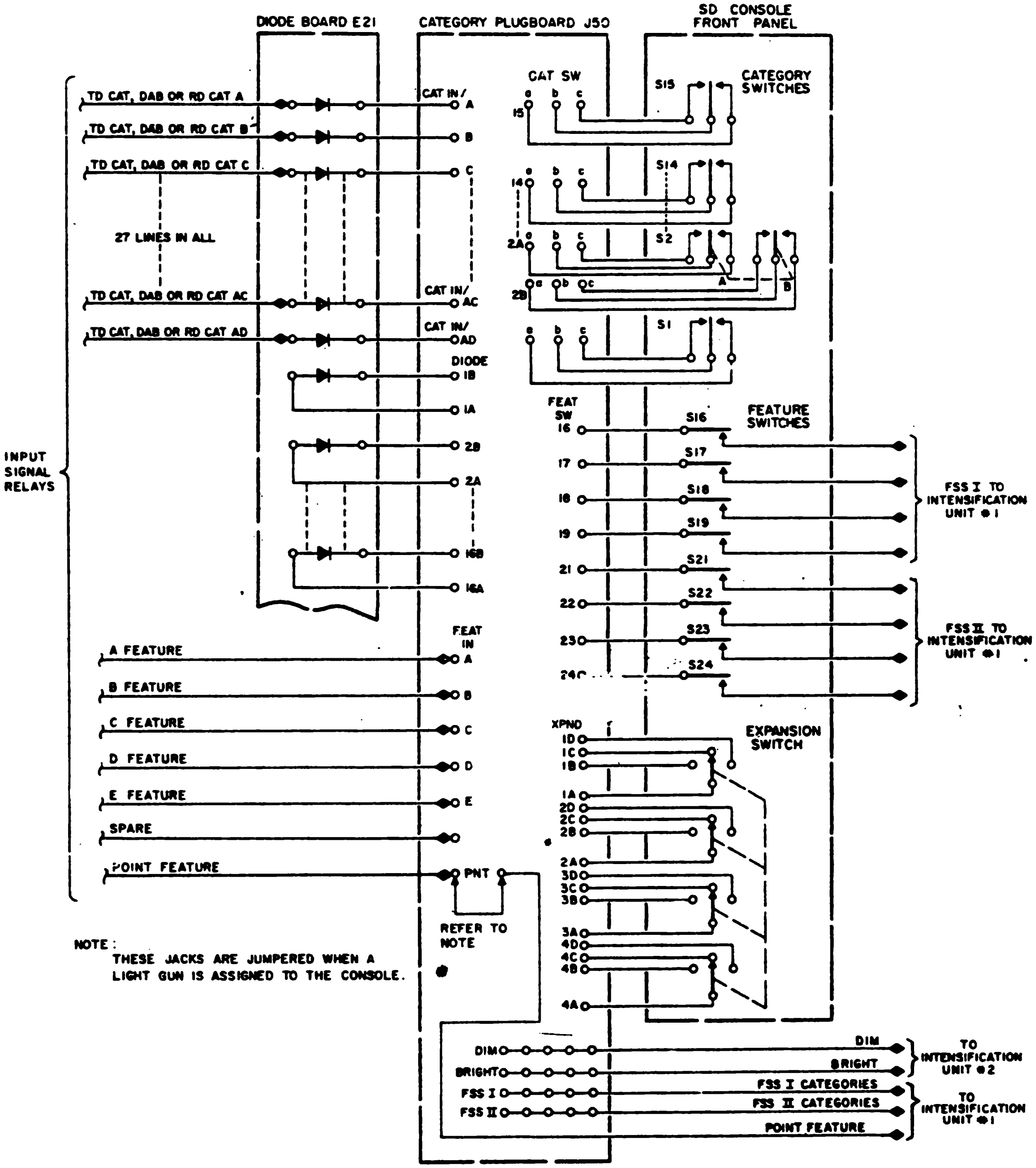

Figure 4—18. Category Control Panel (Plugboard), Schematic Diagram

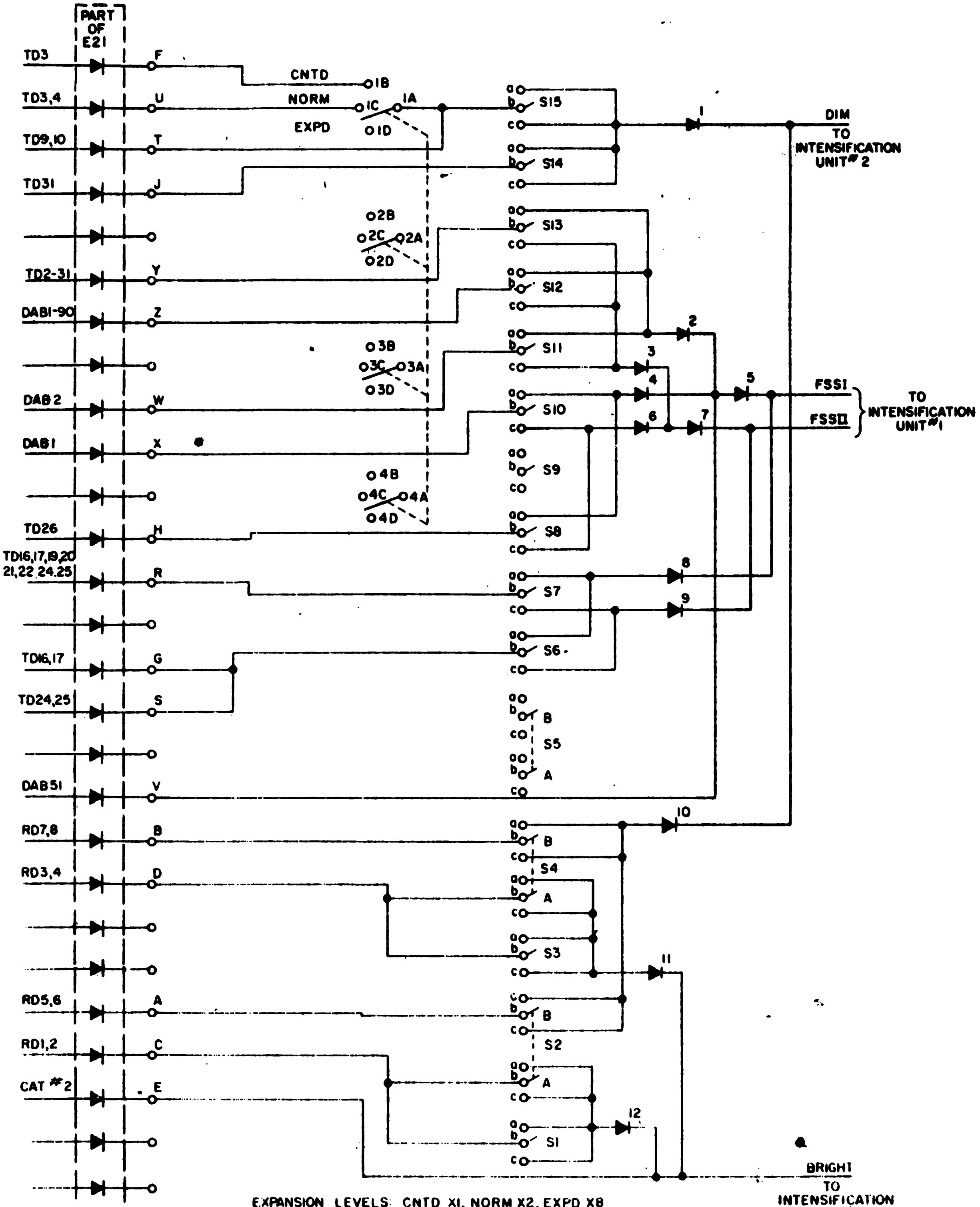

EXPANSION LEVELS: CNTD X1, NORM X2, EXPD X8
FEATURE ASSIGNMENTS: REFER TO TABLE 2-1, COLUMN 2
LIGHT GUN: ASSIGNED

Figure 4—19. Typical CAT/DAB Plugboard, Wiring Diagram

h. FEAT SW

(1) The eight jacks in this group are used for connecting the features at the input to the plugboard to the feature switches located on the front panel of the console.

i. Output Jacks

(1) The jacks at the bottom of the control panel are the four main outputs of the plugboards. These are the intensity lines: bright, dim, FSS I, and FSS II. The remaining (unlabeled) jacks are for convenience in patching.

j. Intensity Levels

(1) There are two different levels of illumination for messages appearing on the viewing screen of the SD CRT: dim and bright. Some messages will always appear dimly illuminated and some will be relatively bright. The remainder can be made dim or bright, according to the needs of the operator. In general, two types of messages will always appear at the bright level of intensification: present radar and TD CAT 2 messages.

(2) All other messages will be placed in one of two groups: FSS I or FSS II. The intensity level of these two groups will be determined by the setting of the corresponding BRIGHT-DIM switches on the front panel.

(3) The forced CAT and DAB signals will always be connected to the FSS I group and, therefore will always have the same level of intensification as messages placed in the group.

k. Patching Procedure

(1) Figure 4-19 is a typical CAT/DAB plugboard wiring diagram for an SD console and illustrates the patching procedure. The CAT and DAB assignments appear on the lines feeding diode board E21. Only 18 of the 27 available input lines to the plugboard are utilized. The outputs of the diode board are wired to the CAT IN jacks of the plugboard. The purpose of the patching procedure is to channel these inputs through the EXPANSION and CATEGORY switches onto one of the four

**Refer Fig 4-19
Page 0780**

intensification lines (bright, dim, FSS 1, and FSS II). Jumpers with 2, 3, 4, and 5 heads are available for patching the plugboard as directed in the wiring diagram.

(2) The inputs to CAT IN jacks, F, U, and T (T, D geography categories), are assigned to CAT switch S15. However, inputs F and U are functions of expansion and are therefore patched to contacts 1b and 1c of section 1 of the EXPANSION switch, before feeding S15. The expansion levels for the three positions of the expansion switch are noted at the bottom of the wiring diagram. Input T is independent of the expansion levels and is patched directly to S14. The outputs of CAT switches S14 and S15 are connected to the dim output line through isolation diode 1.

(3) The inputs at CAT IN jacks, Y, Z, W, X, H, R, G, and S are individually patched directly to CAT switches S13 through S6, respectively. (S9 is not utilized). The outputs of these switches in the FSSI position (contact a) are fed to the FSS I output line by means of isolation diodes 2, 4, 5, and 8. In a similar manner, the outputs of each of the FSS II positions (contact c) are applied to the FSS II output line through isolation diodes 3, 6, 7, and 9..

(4) The inputs at jacks B, C, A, and C (radar categories) are patched to CAT switches S4 through S1, respectively. The CAT switches S4 and S2 are double-pole switches; the outputs of one pole (section B of these switches) are connected to the dim output line by means of diode 10. The outputs of CAT switch S3 and section A of S4 are fed to diode 11; S1 and section A of S2 are connected to diode 12. The outputs of diode 11 and 12 are applied to the bright output line.

(5) DAB 51 (CAT IN jack V) is a forced display and is patched to the FSS I output line through diode 5. The CAT 2 (all categories) is also a forced display and is connected to the bright line.

(6) The patching information for the feature assignments is not included in the CAT/DAB plugboard wiring diagram. The necessary information is provided with each console; i.e., FEAT IN A is patched to FEAT SW 16; B, to 21; C, to 17 and 22; D, to 18 and 23; and E, to 19 and 24, for the typical plugboard used in this discussion.

(7) In this manner, all SD selection signals have been placed on one of the four lines which go to the intensification circuits. All CAT and DAB signals which have been routed to the dim line will produce dim intensification for the messages they control; this also holds true for the signals on the bright line. In addition, category switches that are turned to FSS I will receive the intensification determined by the setting of the FSS I BRIGHT-DIM switch. The same is true for FSS II. However, an exception occurs in the case of RD and geography TD categories whose brightness is independent of the feature switches.

6. Summary Questions

a. RD categories are selected by which of the following:

A. LS - L4 word 2
B. L6 - R15 word 2 & word 3 & word 4
C. LS - L5 word 2
D. L14, L15
E. L14, L15, and bright or dim pulse

b. Answer True or False

1) Categories and DABS may be mixed at the console.

2) Character Selection Signals appear at the console on four lines.

3) Compensation plates are used only to compensate for character selection, and to position characters within a message.

4) The Helical Band is used to provide gradual acceleration.

5) The voltage potential between cathode and viewing screen

of the SD Tube is approximately 12KV.

6) The electron beam of the SD Tube is always defocused.

c. What is the function of the Signal Switch Relays?

d. What are the deflection bit lines used for in Intensification Unit #2?

e. What is the function of the expansion relays?

7. Intensification

All consoles receive certain signals necessary for intensification. Among these signals are an intensity gate, focus and defocus gates. These signals by themselves will not cause the SD CRT to be unblanked. The signals which determine whether or not the display console will be intensified are the cat or dab lines and the feature levels wired to the console. Since these signals vary with different messages, it will become necessary to analyze intensification for RD and TD messages separately. Before observing how various types of messages cause intensification, it will be vital that a basic understanding of intensification units 1 and 2 and their correlation with CAT switches and feature selection switches be obtained.

a. Intensification Unit 1

Refer Fig. 4-20
Page 0840

(1) Feature Selection Switch Inputs

S16 ("A" feature) to J44 - B3
S17 ("C" feature) to J44 - B2
S18 ("D" feature) to J44 - B1
S19 ("E" feature) to J44 - B7
S21 ("B" feature) to J44 - C7
S22 ("C" feature) to J44 - C5
S23 ("D" feature) to J44 - C1
S24 ("E" feature) to J44 - C6

(2) Cat Switch Inputs

Cat switch to the left - CAT signal applied to J44 - E6
Cat switch to the right - CAT signal applied to J44 - E5.

(3) Bypass feature - a direct input from the SDGE that bypasses the feature selection switches.

(4) Cat signals and feature levels are combined by means of AND 1 and 2 to provide an output to the Bright or Dim line depending on the position of S20 or S25. The bright and dim lines are connected directly to intensification Unit 2.

(5) cCF's are clamped at -30 volts and hence the

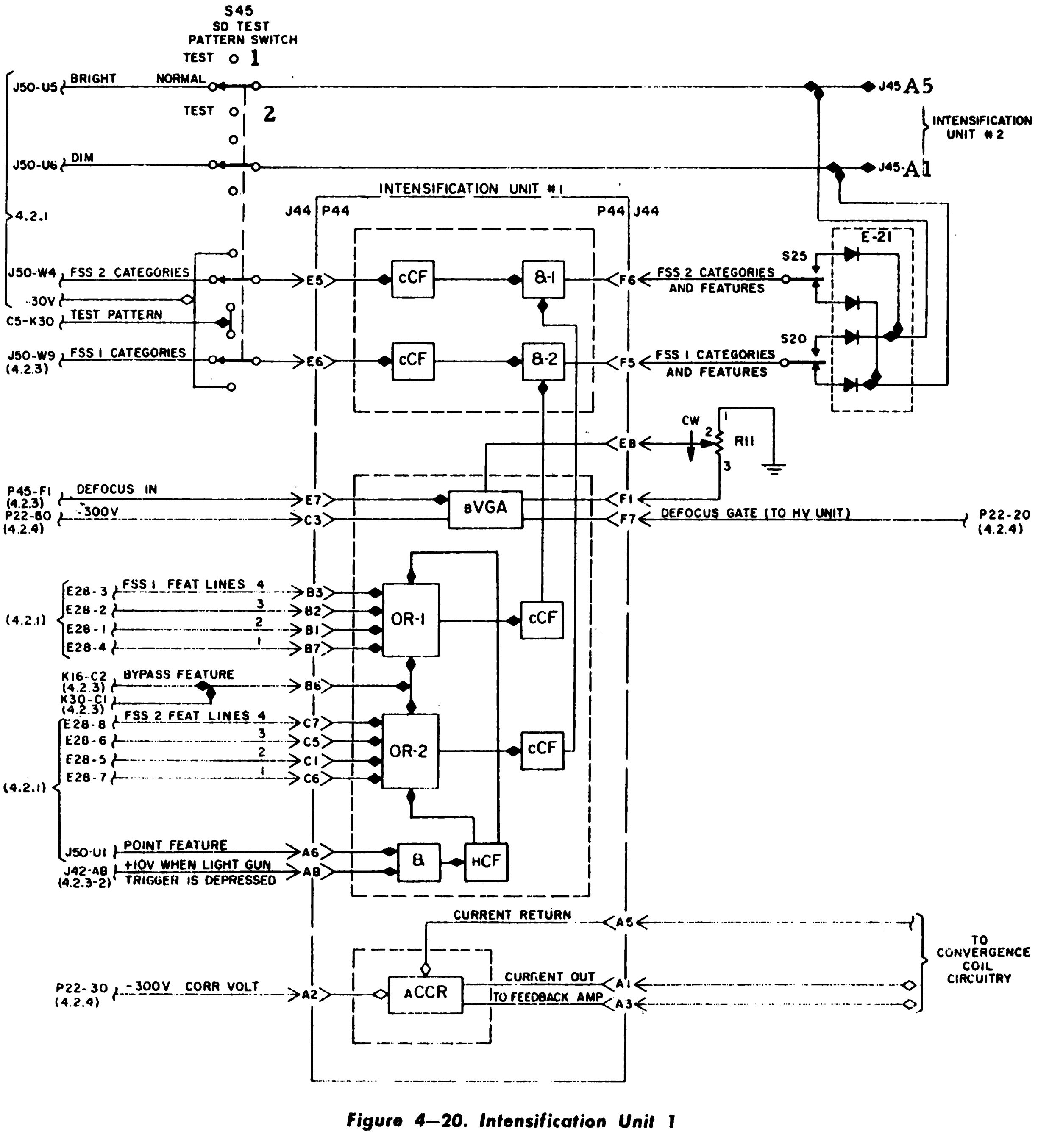

Figure 4—20. Intensification Unit 1

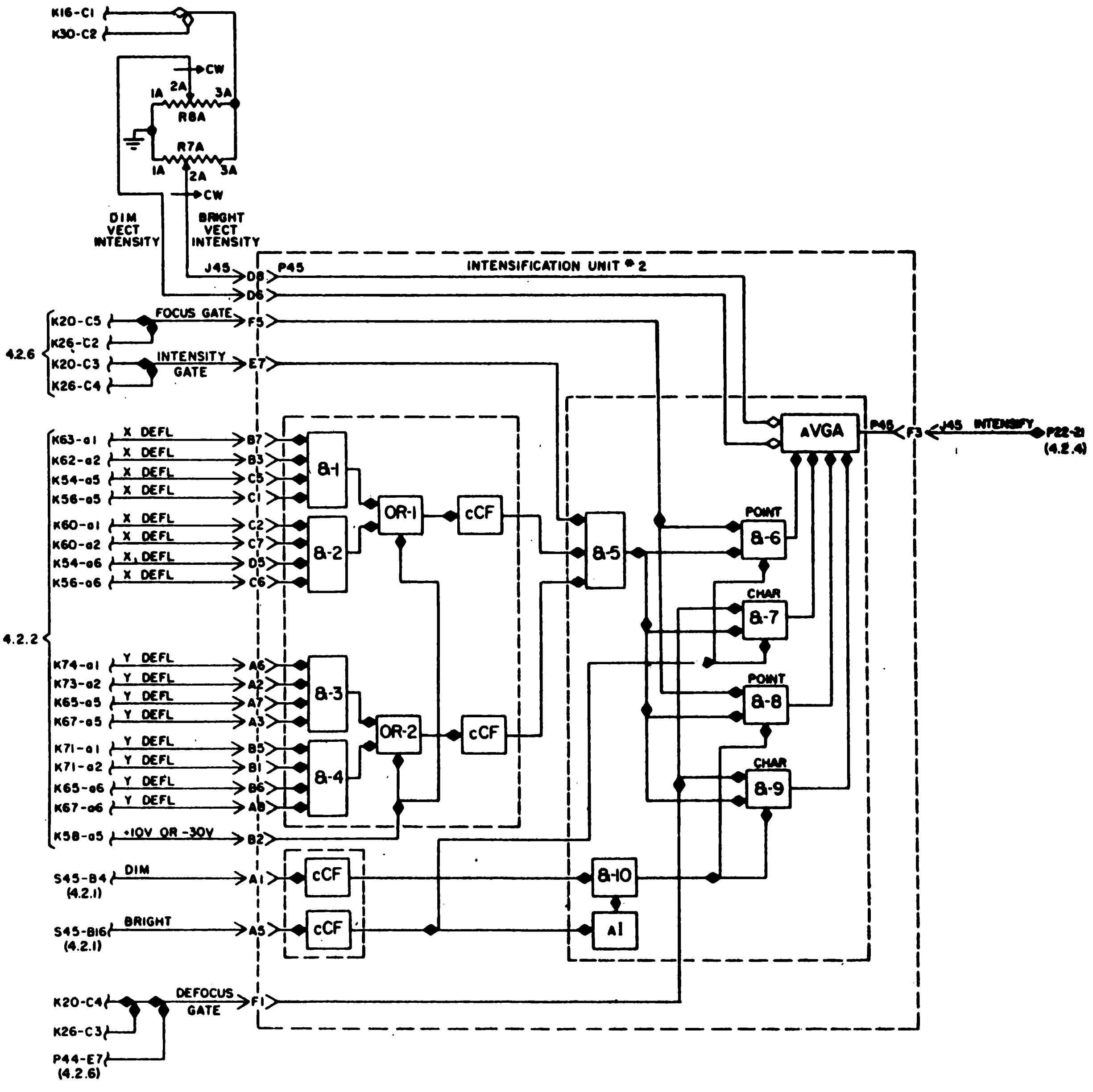

Figure 4–21. Intensification Unit 2

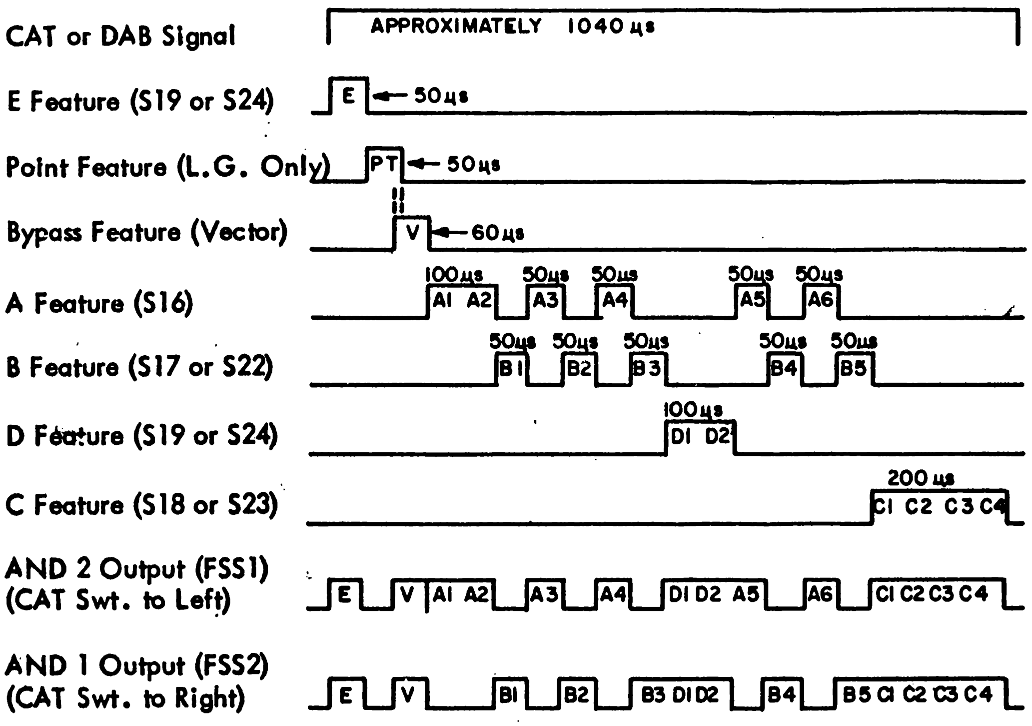

NOTE 1: The output of AND 1 or 2 can be fed to the bright or dim lines by means of the bright/dim switches (S20 and S25).

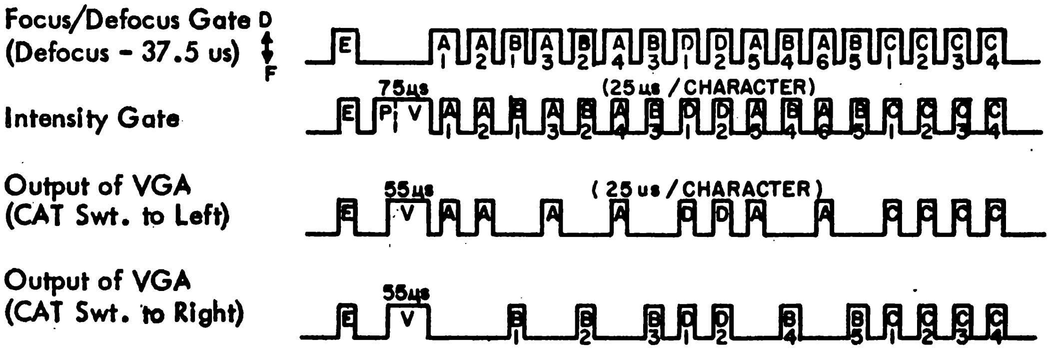

NOTE 2: The Point Feature is shown in signal lines coming to Display Consoles, only to show the reason for the 55 us intensity signal out of the VGA if a light gun trigger is not depressed. The Point Feature is only effective if the L.$\overline{\text{G.}}$ Trigger is depressed with the effect of increasing the 55 us. intensity gate from the VGA to 75 us.

INTENSIFICATION OF A TRACK MESSAGE

Figure 4-20A

output of the cCF is -30 when there is no input. This is the condition when either a cat switch or feature selection switch is open.

b. Intensification Unit 2

(1) Receives inputs on the bright or dim lines, focus or defocus line and intensity line. The deflection bit inputs are used to intensify only those areas selected by a particular expansion scale. Since the effect of these deflection bits on intensification will be explained later, it is important to note the input at J45 - B2 is at +10 for X1 expansion. The remainder of this explanation on intensification will be based on the assumption that a display console is in X1 expansion and that OR1 and 2 are always conditioned.

Refer Fig. 4-21
Page 0850

(2) Because there is a bright and a dim line, it can be seen that there must be a means of controlling the intensity of characters and vectors in a message. The circuit that controls the intensification signal to the control grid of the SD CRT is the aVGA. It has two inputs at P45 - D6 and P45 - D8 that are signals from the SDGE which will cause a long vector to be displayed as bright as a short vector. The remaining four inputs are of particular interest to display personnel as are their effects on intensification. The following chart is a cross reference between inputs and their effects on intensification for X1 expansion.

AND CRT	Conditioned By	Effect
6	Focus Gate Intensity Gate Bright Line	Causes vectors to be displayed bright
7	Defocus Gate Intensity Gate Bright Line	Causes characters to be displayed bright
8	Focus Gate Intensity Gate Dim Line	Causes vectors to be displayed dim
9	Defocus Gate Intensity Gate Dim Line	Causes characters to be displayed dim

(3) The inverter in intensification Unit 2 is used if a bright cat and dim dab or a dim cat and bright dab come up simultaneously. In either of these two cases, the bright signal takes priority because by means of the inverter, AND 10 becomes deconditioned and hence AND 8 and 9 are also deconditioned.

8. a. Intensification of a tabular track message - In order to intensify a track message, the console operator must either place his cat switch to the left and use his FSS1 switches to select features or place his cat switch to the right and use the FSS2 switches. With the CAT switch closed, category signals can be applied to intensification Unit 1 at pins E5 or E6. This signal will be present for almost the entire length of the TD message. After the category signal comes up, the feature levels are applied to Intensification Unit 1 in the order shown in figure 4-20A, if the feature switches are closed. If the CAT switch was thrown to the left, AND 2 will be fully conditioned as the A, C, D, E and bypass features come up. If the CAT switch was moved to the right, AND 1 will be conditioned as the B, C, D, E and bypass features go to +10. The outputs of AND 1 or 2 are fed to the BRT/DIM lines by means of the bright-dim switches S25 and S20. The BRT/DIM line connects directly to intensification Unit 2.

Refer Fig. 4-20
Page 0840

Refer Fig. 4-20A
Page 0860

b. Intensification Unit 2 receives the same signals on either the bright or dim line. (Note - Only one line (Bright or Dim) can be used at any one time. They do not carry the same signals simultaneously when displaying a track message.) The dim line conditioned one leg of AND 8 and 9 while the bright line conditions one leg of AND 6 and 7. The next signal sent to display consoles by the SDGE is either a focus or defocus signal. Since the focus signal comes from one side of a FF in the SDGE and the defocus signal comes from the other side, the focus or defocus signal is always present at the console. The defocus gate is used to intensify characters while the focus gate is used to intensify vectors. The last signal necessary to cause intensification is an intensity gate. When various combinations of bright or dim signals, focus or defocus and intensity signals are at +10 at the same time, one of the four inputs to the VGA will cause an intensity gate to be applied to the control grid of the SD CRT.

c. Variable Gate Amplifier Model A

Refer Fig. 3-212
Page 0910

(1) The $_A$VGA provides the SD CRT with an intensification gate. A message may be displayed either bright or dim. Two intensification gate levels are required. However, since a point is chosen with a focused electron beam and characters are selected with the beam defocused, points would be brighter than a character if the same intensification levels were used for both. In order to obtain the same degree of intensity (bright or dim) for both points and characters, the AVGA, with four input channels, is employed. Input selection depends upon whether a bright or dim point or character is displayed. The positive gate applied to an individual input causes the corresponding switch tube to conduct. Except for this selection feature, circuit operation is identical to that of the $_B$VGA. The individual amplitude controls (R5, R9, R11, and R13) permit equalization of all dim and bright displays. Master intensity control R2 permits adjustment of the overall intensity of the display.

(2) Vectors require special compensation because they are generated by a sweeping point over varying distances. If not compensated for, a short vector will appear brighter than a long vector. In order to obtain the same degree of intensification for all vector lengths, a negative gate, the amplitude of which is proportional to vector length, is applied at the cathode of V1 and V2. A negative voltage applied to a cathode of a tube has the same effect as a positive voltage applied to the control grid. In effect, the grid voltage of V1 or V2, depending on whether a dim or bright vector is required, is increased; this in turn produces an intensity gate output, the amplitude of which is increased. Since the input vector length, the output is greatest in amplitude for a long vector and least for the shortest vector (a point). Note the associated wave shapes in figure 3-212.

R13	Bright character amplitude control
R14	Plate load resistor for switch tubes
R15	Part of voltage divider (with R17)
R16	Feedback resistor from plate to control grid of V5
R17	Part of voltage divider (with R15)
R18	Plate load resistor for V5

9. Intensification of Info Messages

a. Info messages are similar to track messages. The major differences are a lack of B characters and no vector or point. There are 2 means of wiring categories associated with info messages to a display console.

(1) If under control of a CAT switch wired to the DIM or BRIGHT lines, +10 will be applied to the DIM or BRIGHT inputs to intensification Unit 2 for the complete message. The defocus gates for an info or track message are the same. An intensity gate is generated at the same time for a track or info message also, with the lack of an intensity gate for B characters, vector or point feature in an info message. Hence for an info message, AND 7 and 9 of Intensification Unit 2 are of prime concern to the VGA for the A, C, D and E characters only.

Refer Fig. 4
Page 0950

(2) If under control of a CAT switch wired to FSS1 or FSS2 lines, the info message must pass through Intensification Unit 1 before being connected to the BRIGHT or DIM line. In this instance, AND 1 or 2 will provide an output when the bypass feature and the CAT signal are applied to AND 1 and 2's inputs simultaneously. Since the CAT signal is at +10 for the entire message, the bypass feature will determine when AND 1 and 2 provide a +10 output. For info messages, the SDGE brings the bypass feature

Refer Fig. 4
Page 0950

A model - used in Intens. unit II

B mode - same as A mod except only 1 switching tube and associated ckts.

Used for Focus - Defocus Gate

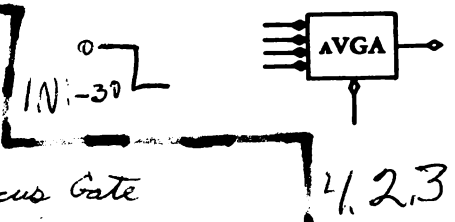

SD intensification gate

1. Four switch tubes
2. Input: Four —30V to 0V gates (25 μsec or 75 μsec) One variable amplitude (50 μsec)
3. Output: Variable amplitude gate 0-110V

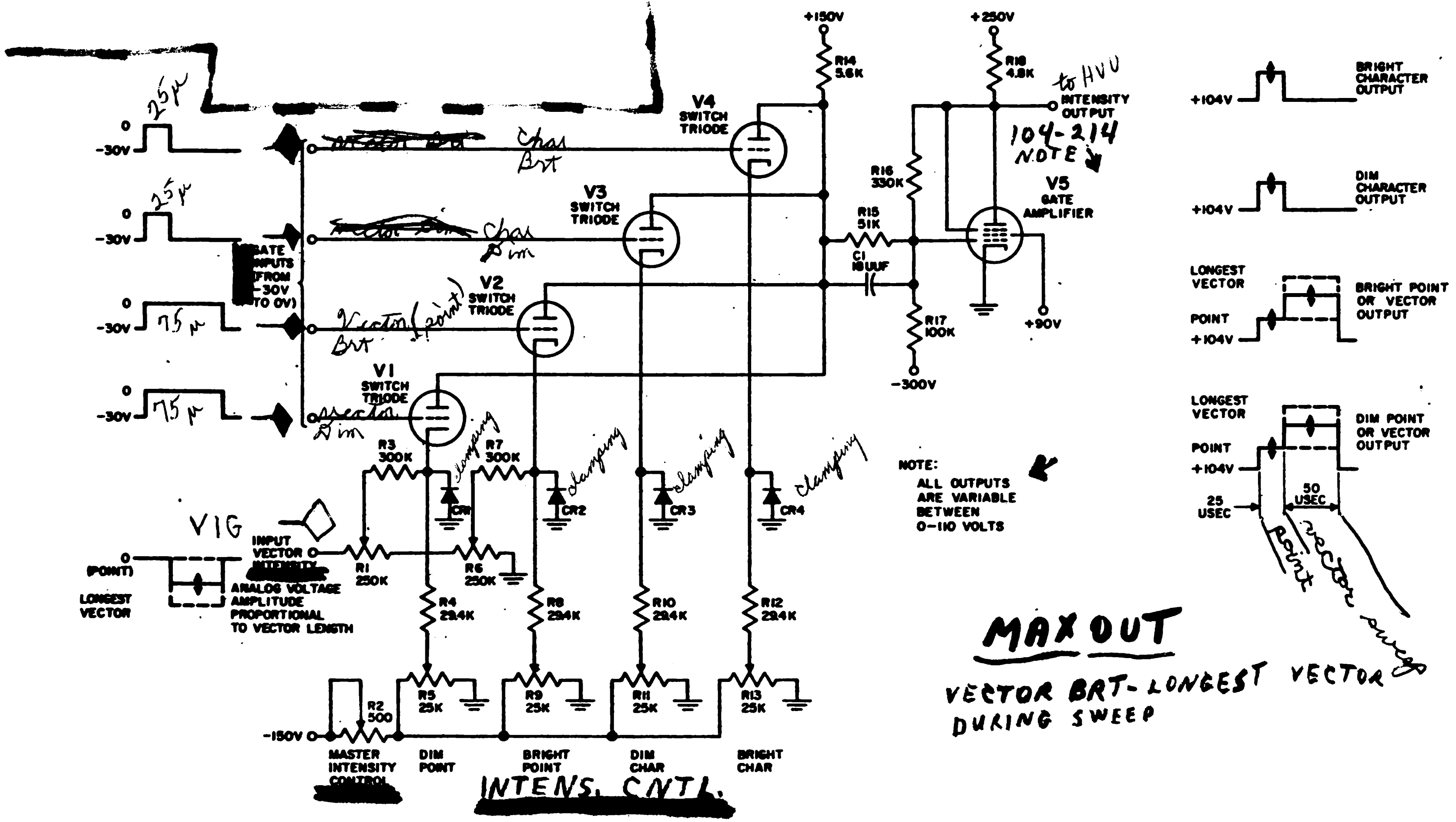

MAX OUT

VECTOR BRT - LONGEST VECTOR DURING SWEEP

Figure 3—212. Variable Gate Amplifier, Model A, Schematic Diagram

(3)

REFERNCE SYMBOL	FUNCTION
C1	Speedup capacitor, improves rise and fall time
CR1	Crystal diode, clamps V1 cathode at ground
CR2	Crystal diode, clamps V2 cathode at ground
CR3	Crystal diode, clamps V3 cathode at ground
CR4	Crystal diode, clamps V4 cathode at ground
R1	Dim intensity vector amplitude control
R2	Master intensity amplitude control
R3	Isolation and current - limiting resistor for CR1
R4	Cathode load resistor for V1
R5	Dim point amplitude control
R6	Bright intensity vector amplitude control
R7	Isolation and current-limiting resistor for CR2
R8	Cathode load resistor for V2
R9	Bright point amplitude control
R10	Cathode load resistor for V3
R11	Dim character amplitude control
R12	Cathode load resistor for V4

to +10 only for the A, C, D and E characters. Hence the BRIGHT or DIM lines will be at +10 for the A. C. D and E characters and all that remains is for the defocus and intensity gates to occur simultaneously with the outputs of AND 1 and 2 in order for the CRT to become unblanked.

10. Intensification of Vector Messages

Vector messages can be wired in the same manner as an info message. However for a vector message the bypass feature is at +10 for the complete message and the intensity gate is the variable factor which determines when the CRT will be unblanked. The SDGE generates an intensity gate for vector 1, 2, 3 and 4 of 47. 5 us and a 25 us gate for the G characters at the times indicated in Fig. 4 to allow the CRT to intensify the vector message.

Refer Fig. 4
Page 0950

11. Intensification of Radar Messages

RD categories should always be wired to the BRIGHT or DIM lines, Hence they bypass intensification Unit 1. RD category lines are at +19 for almost 60 us. When the SDGE is processing an RD message, it sends a defocus gate of 37. 5 us and an intensity gate of 25 us to the SDIE. When a cat line, defocus gate and intensity gate are at +10 at the same time, AND 7 or 9 in intensification Unit 2 is fully conditioned. Since the intensity gate is of the shorter duration and since all three signals overlap, it can be seen that the output of the VGA will be 25 us for all RD messages that are intensified at a console.

Refer Fig. 4
Page 0950

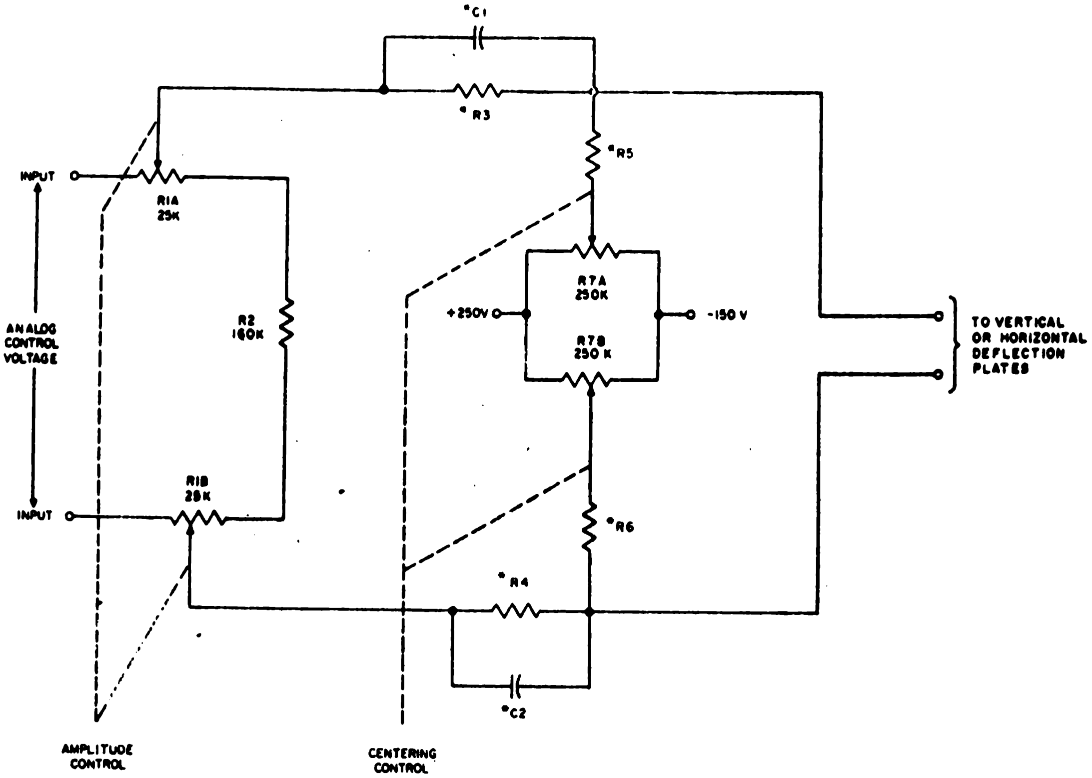

NOTE:
* VALUE OF THESE COMPONENTS IS DETERMINED BY CONTROL NETWORK APPLICATION

Figure 4–5. High-Voltage Unit, Typical Centering and Amplitude Control Network, Schematic Diagram

TABLE 4–5. HIGH-VOLTAGE UNIT, CENTERING AND AMPLITUDE CONTROL NETWORK, FUNCTION OF DETAIL PARTS

REFERENCE SYMBOL	FUNCTION
C1	Part of frequency compensation network (with R3)
C2	Part of frequency compensation network (with R4)
R1	Output voltage amplitude control
R2	Limits range of R1
R3	Part of frequency compensation network (with C1)
R4	Part of frequency compensation network (with C2)
R5, R6	Isolating resistors
R7	Centering control

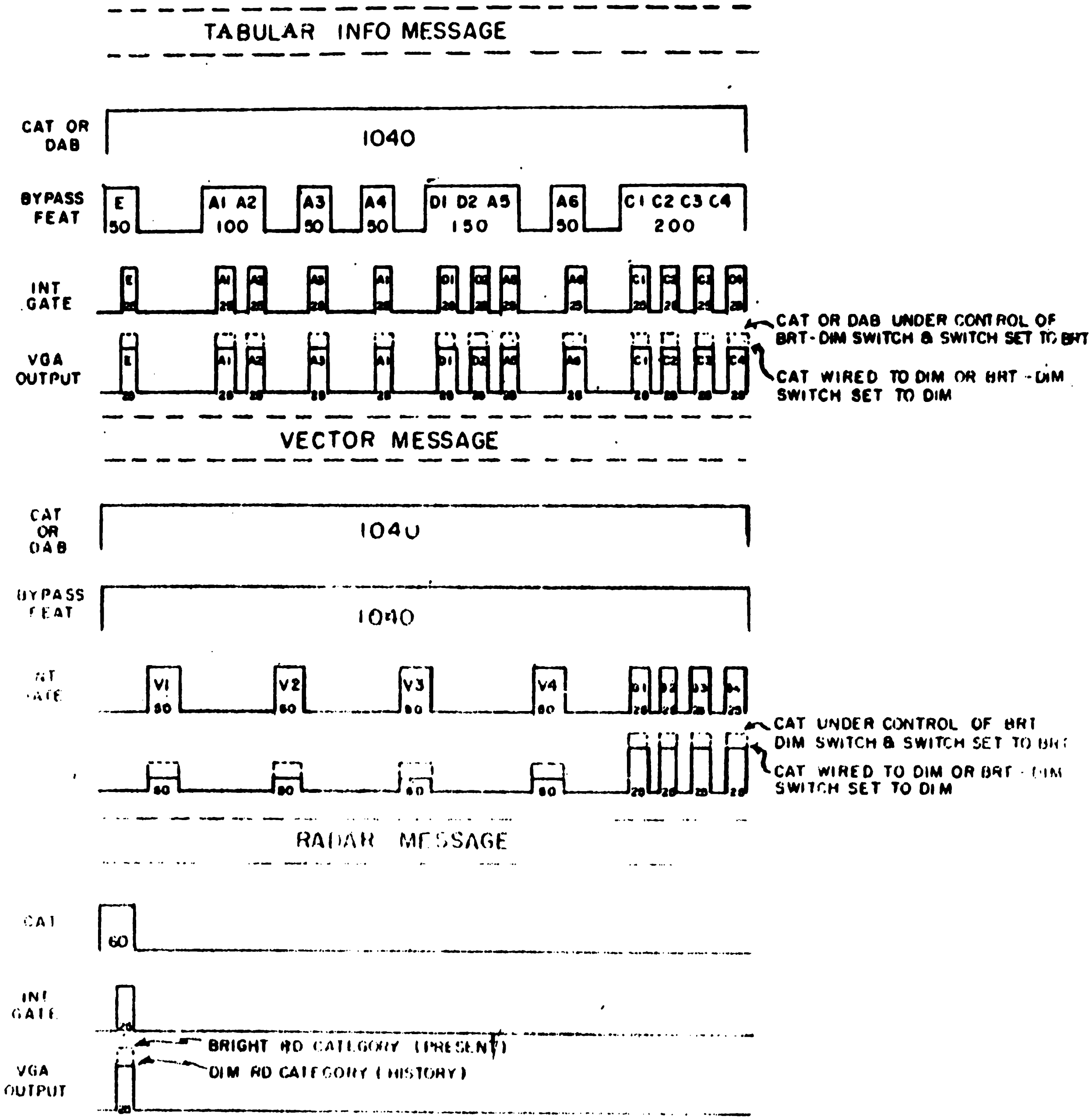
TABULAR INFO MESSAGE
CAT OR DAB
1040
BYPASS FEAT
E 50
A1 A2 100
A3 50
A4 50
D1 D2 A5 150
A6 50
C1 C2 C3 C4 200
INT GATE
VGA OUTPUT
CAT OR DAB UNDER CONTROL OF BRT-DIM SWITCH & SWITCH SET TO BRT
CAT WIRED TO DIM OR BRT-DIM SWITCH SET TO DIM
VECTOR MESSAGE
CAT OR DAB
1040
BYPASS FEAT
1040
INT GATE
V1
V2
V3
V4
CAT UNDER CONTROL OF BRT DIM SWITCH & SWITCH SET TO BRT
CAT WIRED TO DIM OR BRT-DIM SWITCH SET TO DIM
RADAR MESSAGE
CAT
60
INT GATE
BRIGHT RD CATEGORY (PRESENT)
DIM RD CATEGORY (HISTORY)
VGA OUTPUT

FIGURE 4

12. High Voltage Unit (General)

a. The high-voltage units are nonlogic circuits used to combine and to apply the d-c and variable control voltages necessary for the operation of Display and Input System CRT's. Each high-voltage unit consists of two sections: an electronic section and a control network section. Since the control networks have the same circuit configuration and differ only in the value of detail parts; they are discussed in general on the basis of a typical network. However, the electronic sections of each high-voltage unit differ one from another and are discussed by model designation.

b. [illegible]les of Operation

1) Typical Control Network

(a) Each high-voltage unit contains from four to six control networks. Each control network is physically connected to a pair of deflection plates. Figure 4-5 is the schematic diagram of a typical control network Table 4-5 lists the associated detail parts and their functions. Analog-deflecting voltage is applied across resistors R1 and R2. R1 is a dual section (A and B) potentiometer with a single control shaft. Rotation of the shaft in one direction causes the variable arms to move toward R2, reducing the amplitude of the voltage applied to the deflection plates. Rotation of the shaft in the other direction causes the variable arms to move toward the input terminals and increases the amplitude of analog voltage applied to the deflection plates. R1 permits the adjustment of analog control voltage applied to the deflection plates in the range of 75 to 100 percent of the input voltage.

Note: Fig. 4-5
Table 4-5
Page 0940

(b) Capacitors C1 and C2 speed up the application of input voltage level transistions to the deflection plates, compensating for the high-frequency losses introduced by the network.

(c) Resistor R7 is a dual section (a and B) potentiometer with a single control shaft.

Sections A and B of this potentiometer are connected in parallel between +250 V and -150V in such a manner that the variable arms move in opposite directions for a given rotation of the control shaft. The adjustment of this potentiometer ensures display operation around the physical center of the display tube face. The control provides a pair of residual voltages of desired magnitude and polarity to compensate for all centering effects of component value variations within tolerance and variations within tolerance and variations in physical alignments of SD CRT elements. Resistors R5 and R6 isolate the centering controls from other portions of the network.

2). SD High-Voltage Unit

(a) The SD high-voltage unit is shown schematically in figure 4-6. Table 4-6 lists the associated detail parts and their functions. This high-voltage unit consists of six circuits which provide SD control voltages to the elements listed as follows:

Refer Fig. 4-6
Page 0990
Table 4-6
Page 1000

(1). SD CRT

(a) Heater cathode voltage
(b) Anode 2 voltage
(c) Matrix
(d) Control grid bias and intensity gate
(e) Focus voltage and defocus gate to anode 1.

(b) As seen in figure 4-6, transformer T1 consists of a primary and three secondary windings. Two of the secondary windings provide filament power for clamping diodes V1 and V4. Each winding is center-tapped for the application of suitable reference voltages to prevent filament-to-cathode breakdown. The third secondary winding. referenced at -3,300V, supplies filament voltage for the SD CRT. The accelerating anode and matrix voltage is provided for by the voltage divider consisting of R1 and R3.

(c) The cutoff bias for the SD CRT is provided for by the intensity control circuit. The voltage set by intensity potentiometer R8 is fed through R5 to the control grid of the SD CRT. The bias is variable (0-150V) with respect to the cathode. Capacitor C1 couples the input intensity gate to the control grid. Clamps V1A and V1B limit the excursion of the intensity gate between -3,300V and the bias voltage set by R8. The voltage divider consisting of R6 and R7 provides a reference voltage level of -3,425V for the filament winding of V1.

(d) The focus control circuit provides the voltage necessary to produce a sharply focused electron beam for vector generation. The potential at the moving arm of R12 is adjustable between -2,700V and -2,300V. Proper adjustment of R12 produces a minimum diameter dot image on the face of the SD CRT and ensures unimpeded passage through the matrix. This potential is applied through a voltage divider, consisting of resistors R14, R15, and R16, to the focus anode of the SD CRT. The defocus gate (applied each time a character is selected) is developed across input load resistor R13. Capacitor C4 couples this gate to the focus anode, superimposing the positive focus gate on the fixed bias determined by R12. Clamping diodes V4A and V4B prevent the focus anode from becoming more negative than the fixed focus level when the defocus gate is removed. Resistors R15 and R16 form a voltage divider which provides the required reference level for the V4 filament winding. Resistors R17 through R24 form a bleeder network which provides the required multiplier plate potentials for the light gun and area discriminator. The correction voltage for the convergence current regulator is provided by voltage regulator V2 and V3.

Bias is Difference of potential between cathode + cntl. grid

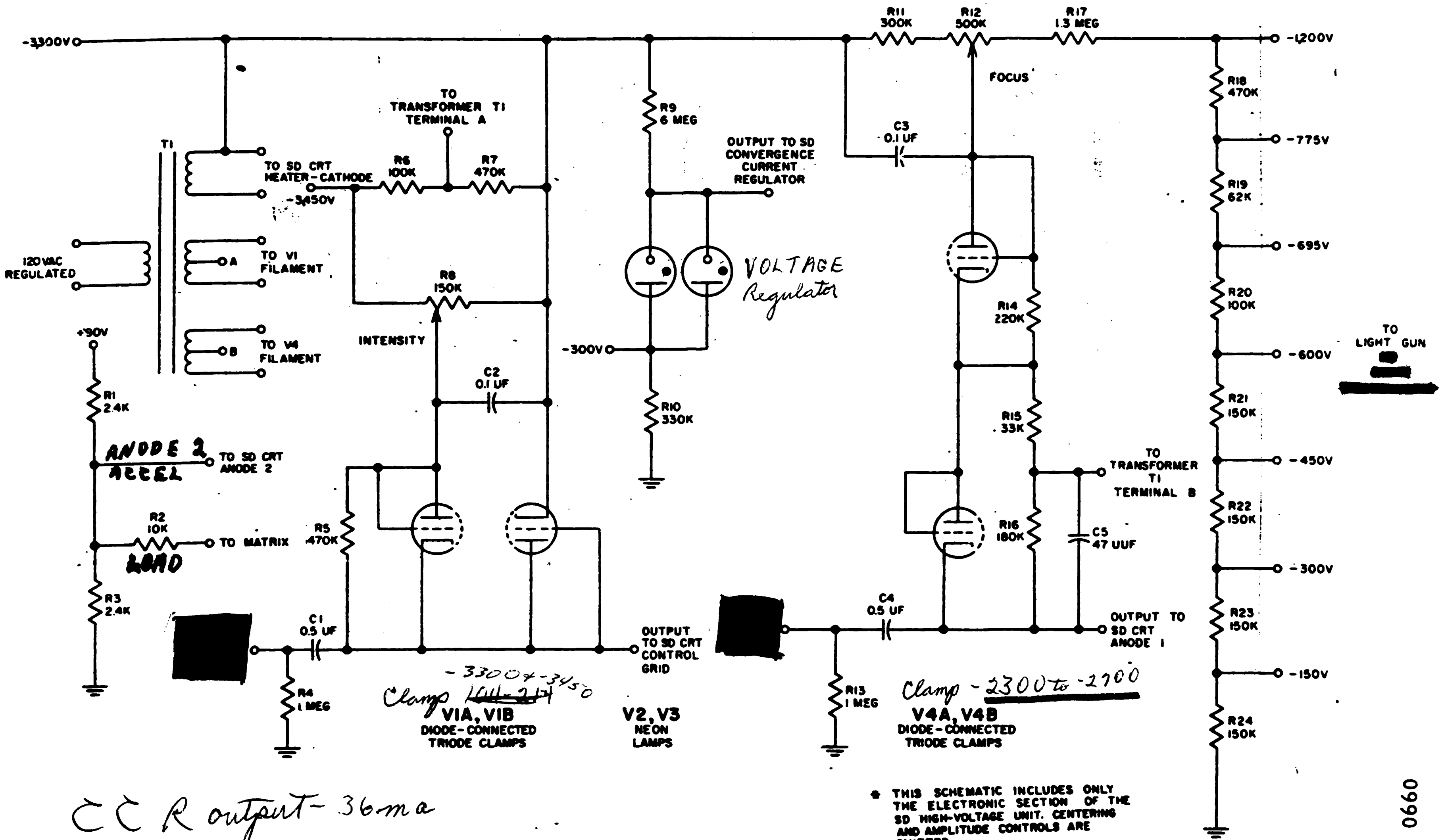

CC R output- 36ma

* THIS SCHEMATIC INCLUDES ONLY THE ELECTRONIC SECTION OF THE SD HIGH-VOLTAGE UNIT. CENTERING AND AMPLITUDE CONTROLS ARE OMITTED.

Figure 4–6. SD High-Voltage Unit, Partial Schematic Diaram

Table 4-6. SD HIGH VOLTAGE UNIT, FUNCTION OF DETAIL PARTS

REFERENCE SYMBOL	FUNCTION
R1	Part of voltage divider (with R3)
R2	Matrix current-limiting resistor
R3	Part of voltage divider (with R1)
R4	Load resistor for input intensity gate
R5	Control grid resistor for SD CRT
R6, R7	Voltage divider
R8	Control grid bias adjust for SD CRT
R9	Current-limiting resistor for V2 and V3
R10	Protective resistor preventing plates of V2 and V3 from falling to -3,300V should -300V line fail
R11	Sets lower limit of focus voltage adjustment
R12	Level-setting potentiometer for SD CRT focus anode
R13	Load resistor for input defocus gate
R14, R15, R16	Voltage Divider
R17-R24	Voltage divider for light gun and area discriminator elements.
C1	Intensity gate coupling capacitor
C2	Intensity control bypass capacitor

REFERENCE SYMBOL	FUNCTION
C3	**Focus control and R11 bypass capacitor**
C4	**Defocus gate coupling capacitor**
C5	**Bypass capacitor for R16**
T1	**Filament transformer for V1, V4 and SD CRT**

13. Summary Questions

a. What is the sequence of displaying each feature of a tabular Track message?

b. When are the Feature Switches effective?

c. What do the output signals of Intensification Unit #1 to BRT-Dim Switches represent?

d. Why do Feature Switches have no effect on Tabular Info Messages?

e. What are the times the Intensity Gage level is at + 10 volts? What is being displayed during these times?

f. What conditions are necessary at the console to display a track message?

g. What would be the result if E6 on J44 (Iint. unit #1) fig. 4-20 page 0840 was open?

14. Circuits used in Deflection System

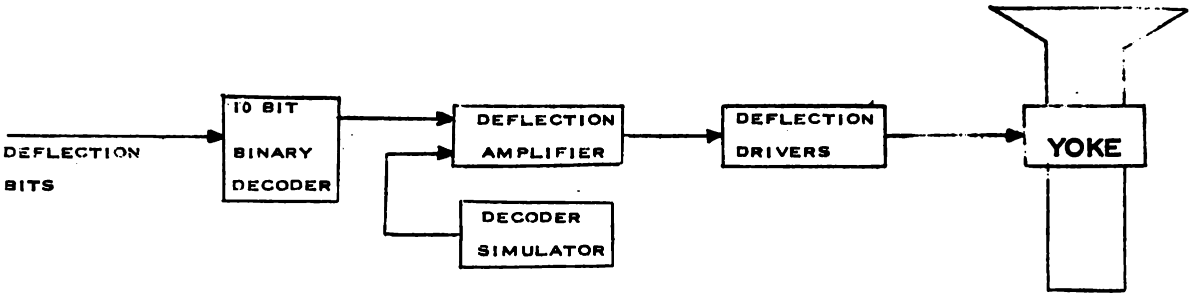

a. Deflection Decoder

1) Review Basic Decoder Theory

Note: For detailed explanation of decoder theory see DDGE master lesson plan

a) Current Source

(1) Supply Constand Current

b) Switch

(1) Select or deselect current source

c) Ladder Network

(1) Distributes current from current source.

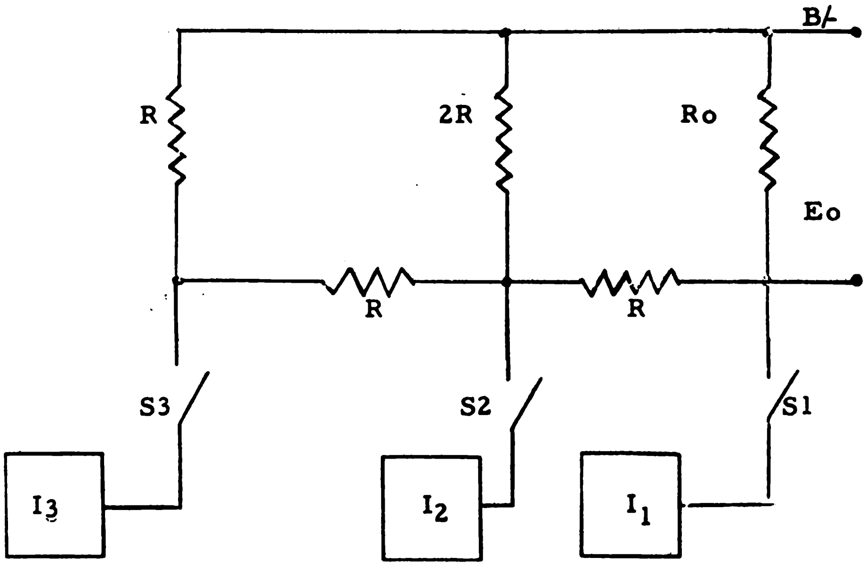

$I_1 = I_2 = I_3$

(2) With S1 closed - 2/3 I1 thru RO

(3) With S2 closed - 1/3 I2 thru RO

(4) With S3 closed - 1/6 I3 thru RO

(5) With S1, S2, and S3 closed - 1 1/6 I thru RO, EO = (B /) -(RO x I thru RO)

2) Binary Decoder, Model A

a. Definition and Description

(1) The model A binary decoder (${}_{A}$BD), employed in the Display System, converts binary levels into equivalent analog levels that are used as message-positioning voltages for the SD CRT. These analog levels are used to position the SD message format on the face of the CRT. The logic block symbol for the ${}_{A}$BD is shown in table 3-11.

Note: Refer table 3-11 Page 1050
Table 3-12
Page 1050

(2) The ${}_{A}$BD contains two decoders; one for the X axis and one for the Y axis. Each decoder consists of 10 decoder sections employing single ladder networks to produce the required analog voltages. The decoder inputs are derived from the word storage portion of the SD generator element (S DGE). The decoder outputs are fed through associated deflection amplifiers and drivers to the windings of the SD CRT deflection yoke as analog currents.

b. Principles of Operation

(1) All ${}_{A}$BD decoder sections are identical with the exception of the CUS's (refer to table 3-11). The four most significant stages employ the same type of CUS used in the previously discussed decoders. In the next three significant stages, the CUS triode is replaced with a fixed resistor. The three least significant stages use only two fixed resistors. The relative effect of current through each decoder section on the output voltage permits these circuit variations. Precise adjustment of CUS current is a function of decoder section significance. The most significant decoder section requires a more precise control of LS current because

TABLE 3—11. BINARY DECODER MODEL — DISTINGUISHING FEATURES

MODEL	LOGIC BLOCK SYMBOL	FUNCTION	NUMBER OF DECODER SECTIONS	COMPONENT VALUES									
				LADDER SECTIONS							CONSTANT CURRENT SOURCES**		
				FRONT 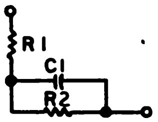			CENTER 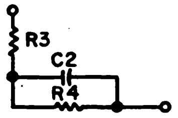			OUTPUT 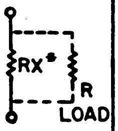	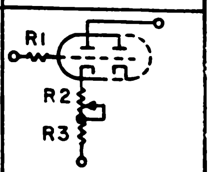		
				R1	R2	C1	R3	R4	C2	RX*	R1	R2	R3
A	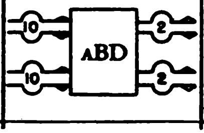	Provides analog levels for SD CRT message positioning	10	15K	15K	—	30K	15K	—	15K	47	1K	56K
							Single Ladder Network						

8 sections for X + same for Y

TABLE 3—12. BINARY DECODER, MODEL A, OUTPUT AS A FUNCTION OF BINARY CONTROL INPUT

DECODER* SECTION	OUTPUT VOLTAGE DROP WHEN BIT IS [illegible]
2^9	25.000 MSD
2^8	12.500
2^7	6.250
2^6	3.125
2^5	1.563
2^4	0.782
2^3	0.391
2^2	0.196
2^1	0.098
2^0	0.049 LSD

*Exponent designates decoder section significance; i.e., 2^9 is the most significant.

1024 possible outputs from X portion and same for Y

they vary between 100 + 150 V

for 1's

for all 0's

small variations in these currents produce relatively large variations in output voltage.

(2) The output voltage of the decoder, as for all other decoders, is a function of the binary controls applied to the decoder. The inputs to each decoder consist of 10 binary levels (+10 or -30V). The greatest number of combinations possible with 10 binary inputs is 1,024; therefore, the decoder outputs is any one of 1,024 discrete levels. The effect of the controls on a decoder section employing a single LS was discussed in paragraph 3.7.2.2. A +10V input (binary) inhibits current flow to the associated LS; a -30V input (binary 0) diverts current into the associated LS. When a binary control 0 is applied to the most significant stage (1's applied to the remaining nine stages), the voltage drop at the output of the decoder equals 25V. This voltage, as seen from the output, is halved for each succeeding decoder section when the control bit to the respective stages is 0 (remaining sections contain 1's). This result is illustrated in table 3-12. The output voltage change for any binary number is the sum of the voltage drops for each bit corresponding to a 0. For example, with a binary output of 0000000000, the voltage drop at the output equals 49.954V. This value may be considered to be 50V, representing the maximum voltage drop developed at the decoder output. The number 1111111111 corresponds to 0V (minimum value); the number 1100001111 equals 11.720V. A further examination of table 3-12 will show that the decoder output voltage linearly reflects the binary input.

Refer-
Page 1070

c. Decoder Alignment

(1) Throw Decoder Test Switch (S1), this disables left halves of all switch tubes. All the switch tubes will now condust thru ladder section. Using Voltmeter adjust the

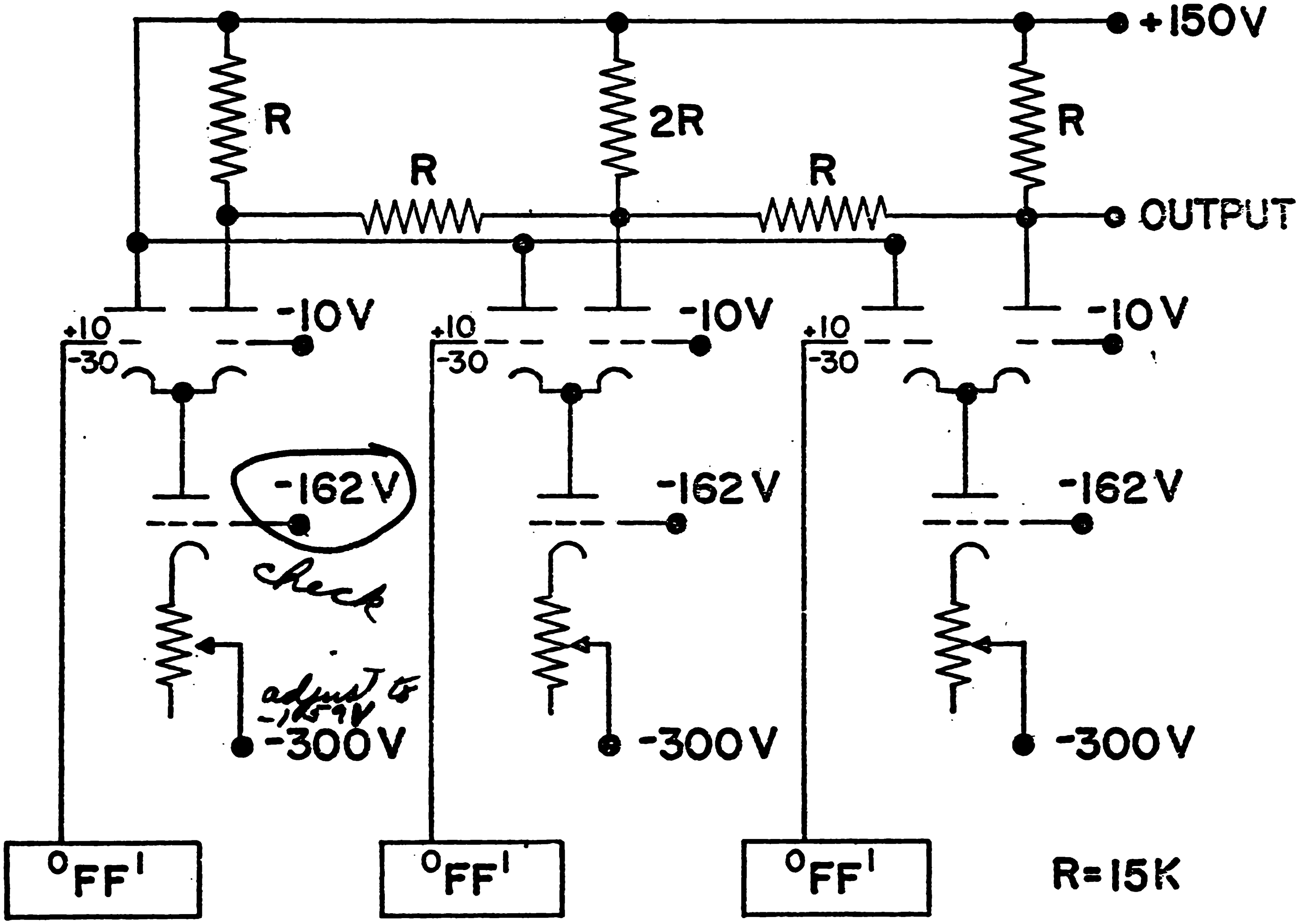

SIMPLIFIED X-Y DECODER CIRCUIT

-162 and -10 volt pot. Using milliammeter adjust for zero current between stages.

3) Decoder Simulators

a. Definition and Description

(1) The decoder simulator (DCS) is a nonlogic circuit which provides a compensated reference voltage for the output of the 10-bit binary decoder. The logic block symbol for the DCS is shown in figure 3-61. Two models of the DCS (models B and C) are employed in the AN/FSQ-7 and -8 equipments. Both uits are identical except for variations in the values of several of the detail parts in the model cDCS. Therefore, only the model B is discussed in detail.

Refer: Fig.
3-61
3-62
Table 3-36
page 1090

b. Basic Operation

(1) Figure 3-62 is the schematic diagram of the $_{\text{B}}$DCS. Table 3-36 lists the associated detail parts and their functions. Two identical decoder simulators ($_{\text{B}}$DCS's) are employed with the 10-bit binary decoder; one for X-axis positioning ($_{\text{B}}$DCS(X)) and the other for Y-axis positioning ($_{\text{B}}$DCS(Y)). Only the X-axis positioning DCS is discussed below.

(2) The $_{\text{B}}$DCS is similar to the output stage of the 10-bit binary decoder, consisting of a constant current tube (V2) and a gate tube (V1). The grid of V1 is returned to -10V; the plate is connected to + 150V through a load that is the equivalent of the decoder output LS. The grid of V2 is returned to -162V and the cathode is returned to -300V. These identical reference voltages are employed by the 10-bit binary decoder.

Fluctuations appearing in any of these voltages cause the $_{\text{B}}$DCS(X) output of the plate of V1 to change. This change in potential at point D compensates for an equivalent change in the 10-bit binary

TABLE 3—36. DECODER SIMULATOR, MODEL B, FUNCTION OF DETAIL PARTS

REFERENCE SYMBOL	FUNCTION	REFERENCE SYMBOL	FUNCTION
R1	Grid-limiting resistor	R8	Part of X-axis gain control network (with R6, R7, R9)
R2	Grid-limiting resistor	R9	Part of X-axis gain control network (with R6, R7, R8)
R3	Part of mu-metal shield compensation network (with C3 and R4)	R10	Cathode resistor for V2
R4	Part of mu-metal shield compensation network (with C3 and R3)	R11	X-axis centering potentiometer
R5	Plate load for V1	C1	Grid bypass for V1
R6	Part of X-axis gain control network (with R7, R8, R9)	C2	Grid bypass for V2
R7	Part of X-axis gain control network (with R6, R8, R9)	C3	Part of mu-metal shield compensation network (with R3 and R4)
		C4	Cathode bypass for V2

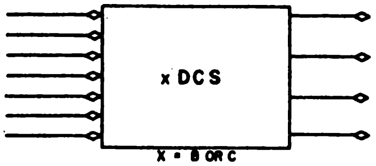

Figure 3—61. Decoder Simulators, Logic Block Symbol

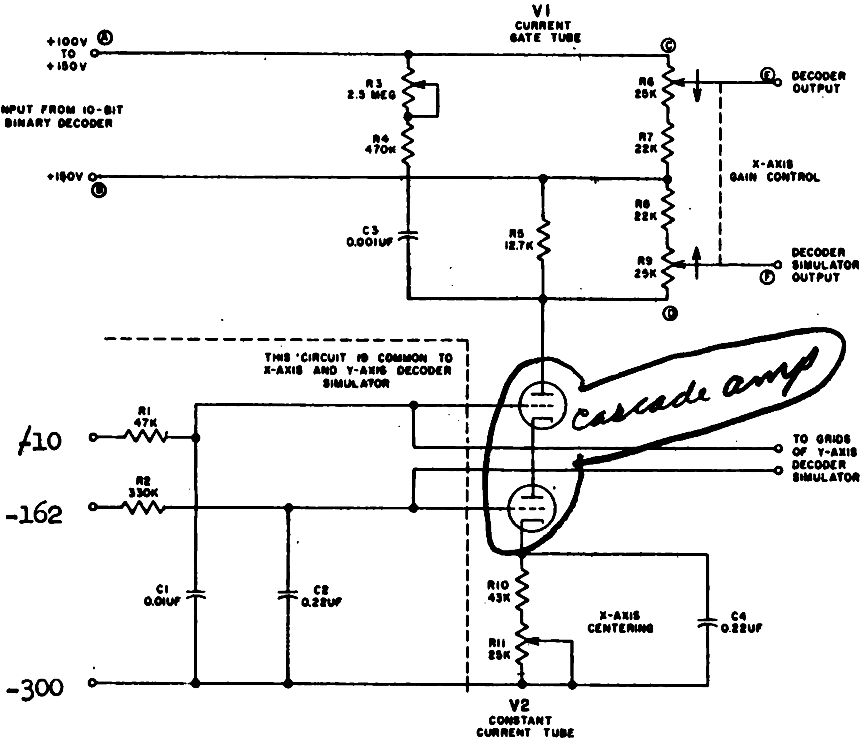

Figure 3—62. Decoder Simulator, Model B, X-Axis Portion, Schematic Diagram

decoder output (point A), maintaining the correct difference in potential between terminals E and F for a given positioning address (decoder input). The differential output (E-F) is applied to the deflection amplifier, representing a message position along the X-axis on the face of the SD CRT.

c. Detailed Operation

(1) Assume that the X-axis gain control is adjusted for maximum output; that is, the wiper arm of R6 is set at point C and the wiper arm of R9 is set at point D. Let the input from the 10-bit binary decoder equal 125V (voltage at terminal A equals +125V). This voltage represents the center position on the X axis of the SD CRT. In order for the message to be positioned in the center, the voltage difference between terminals E and F must be 0. This is accomplished by the adjustment of the X-axis center control, R11, which adjusts the plate voltage of V1. Assume that R13 is adjusted so that the decoder simulator output (reference voltage for decoder output) is + 125V.

(2) Now, if the common + 150V plate supply (terminal B) for V1 and the decoder gate tubes were to increase to + 148V, the voltage at terminal A (and E) would fall to + 123V.

Since a small change in the plate supply voltage of a tube has a negligible effect on plate current, this voltage change is reflected at the plate of the tube. Therefore, the plate voltage of V1 (terminal D) falls 2V to + 123V. Thus, the difference in potential between terminals E and F remains at 0. If the -10V supply becomes more negative, it causes the output of the 10-bit binary decoder (terminal E) to increase; this same grid voltage change causes the plate potential of V1 to become more positive by the same amount. Once again the difference in potential between the decoder and decoder simulator output remains equal to 0. Since common reference voltages are used in the 10-bit binary decoder and the decoder simulator, variations in these voltages are compensated for by the output variations of the $_B$DCS(X). Thus, for a given message position, the differential voltage applied to the deflection amplifier remains at a constant value regardless of reference voltage variations. The magnitude of this voltage is determined by the X-axis gain control, consisting of ganged potentiometers R8 and R11.

(3) Included in the $_B$DCS(X) is a long time constant RC network used to compensate for the non-linearities introduced into the magnetic deflection circuit by the mu-metal shield. The 10-bit binary decoder output is modified so that an exponential waveshape rather than a rectangular pulse is applied to the deflection amplifier. In this manner, the deflection field of the SD CRT stabilizes at the desired level within the required 30 usec.

4) Deflection Amplifier, Display System

a. Definition and Description

(1) The Display System deflection amplifier (DA) is a nonlogic circuit used to amplify the analog outputs of the 10-bit binary decoder. These amplified outputs are applied to the deflection driver as push-pull voltages; the deflection driver provides the SD CRT deflection yoke with message-positioning currents. The logic block symbol for the DA is shown in figure 3-63.

Refer: Fig. 3-63 page 1120

(2) The DA consists of two direct-coupled high-gain differential amplifiers, one for horizontal (X-axis) positioning and the other for vertical (Y-axis) positioning.

1120

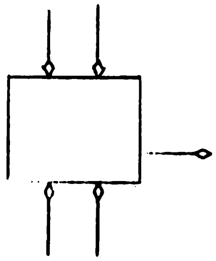

Figure 3–63. Deflection Amplifier, Display System, Logic Block Symbol

TABLE 3–37. DEFLECTION AMPLIFIER, DISPLAY SYSTEM, FUNCT

REFERENCE SYMBOL	FUNCTION
C1	Part of stabilization network (with R9)
C2, C3	Speedup capacitors, improve rise and fall time
C4	Part of stabilization network (with R18)
C5, C6	Speedup capacitors, improve rise and fall time
C7	Stabilization capacitor
C8	Bypass capacitor
R1, R2	Part of voltage divider network (with R5)
R3, R4	Part of voltage divider network (with R6)
R5	Part of voltage divider networks (with R1 or R2)
R6	Part of voltage divider networks (with R3 or R4)
R7, R8	Plate load resistors for V1A and V1B, respectively
R9	Part of stabilization network (with C1)
R10	Part of voltage divider network (with R12)
R11	Part of voltage divider network (with R13)
R12	Part of voltage divider network (with R10)
R13	Part of voltage divider network (with R11)
R14	[illegible]
R15, R16	[illegible]
R17	Plate loa [illegible]
R18	Part of stabilization netw [illegible] with C4)
R19	Part of voltage divider network (with R21)
R20	Part of voltage divider network (with R22)
R21	Part of voltage divider network (with R19)
R22	Part of voltage divider network (with R20)
R23	Plate load resistor for V4
R24, R25	Cathode resistors for V4 and V5, respectively; improve linearity
R26	Plate load resistor for V5
R27	Common cathode resistor for V4 and V5
R28	Cathode resistor for V6A
R29	Part of voltage divider network (with R30 and R31)
R30	Bias-setting potentiometer for V6A and V6B
R31	Part of voltage divider network (with R29 and R30)
R32	Cathode resistor for V6B

Since the two amplifiers are identical only the deflection amplifier for X-axis positioning is discussed.

b. Basic Operation

(1) Figure 3-64, is the schematic diagram for the DA. Table 3-37 lists the associated detail parts and their functions.

Refer: Fig. 3-64
page 1150
Table 3-37
page 1120

(2) The first stage of the DA is a differential amplifier consisting of V1A and V1B. The inputs to V1A, obtained from the 10-bit binary decoder, are analog levels that represent the message format position along the X-axis on the face of the SD CRT. These inputs are any one of 1,024 discrete levels between + 100 and + 150 V. The input to V1B is supplied by the decoder simulator; this voltage for the differential input to the DA.

In addition to the inputs that comprise the differential input, a large amount of degenerative feedback from the deflection driver is fed to the DA. This feedback ensures a linear relationship between the analog output of the 10-bit binary decoder and the output of the deflection driver is fed to the DA. This feedback ensures a linear relationship between the analog output of the 10-bit binary decoder and the output of the deflection driver.

The amplified output of the first stage is a pair of balanced levels which are direct-coupled through two stages of push-pull amplification, V2-V3 and V4-V5, respectively. The push-pull output of the final stage is applied to the deflection driver. Without degenerative feedback the open loop gian of the DA is approximately 3,000; however, with the inclusion of the degenerative feedback loop, the gain is reduced to approximately 3. 7.

c. Detailed Operation

(1) A detailed discussion of the DA in terms of X-axis center positioning and X-axis off-center deflection follows; X-axis center positioning (quiescent state of the DA) is discussed first.

Refer: Fig. 3-64 page 1150

Assume that the input to triode V1A, generated by the 10-bit binary decoder, equals + 125V. This analog voltage corresponds to a message position at the center of the Z-axis. Assume that the input to V1B, supplied by the decoder simulator, equals + 125V. This input represents the compensated reference voltage for the differential input to the DA. The cathodes of V1A and V1B are returned to the plate of constant current tube V6A.

Cathode degeneration maintains the plate current of V6A at a relatively constant value; the magnitude of this current is adjusted with potentiometer R30. The setting of this variable resistor establishes the bias level for V6A and is maintained at a constant value by the action of voltage regulator V7. As a result of the equal potentials on the grids of V1A and V1B, the plate current of V6A is equally divided between these two triodes.

(2) The resultant plate potential of V1A and V1B during quiescence is + 130V. With + 130V at the plate of V1A, 430V appears across the voltage divider comprised of resistors R10 and R12. As a result of voltage division, -55V also appears at the control grid of V3 due to the voltage division performed by resistors R11 and R13. The cathodes of V2 and V3 are

INPUT

V1A, if 125 ~~or more~~ volts or more, conducts harder

V1B conducts harder if 125 Volts or less

[redacted]

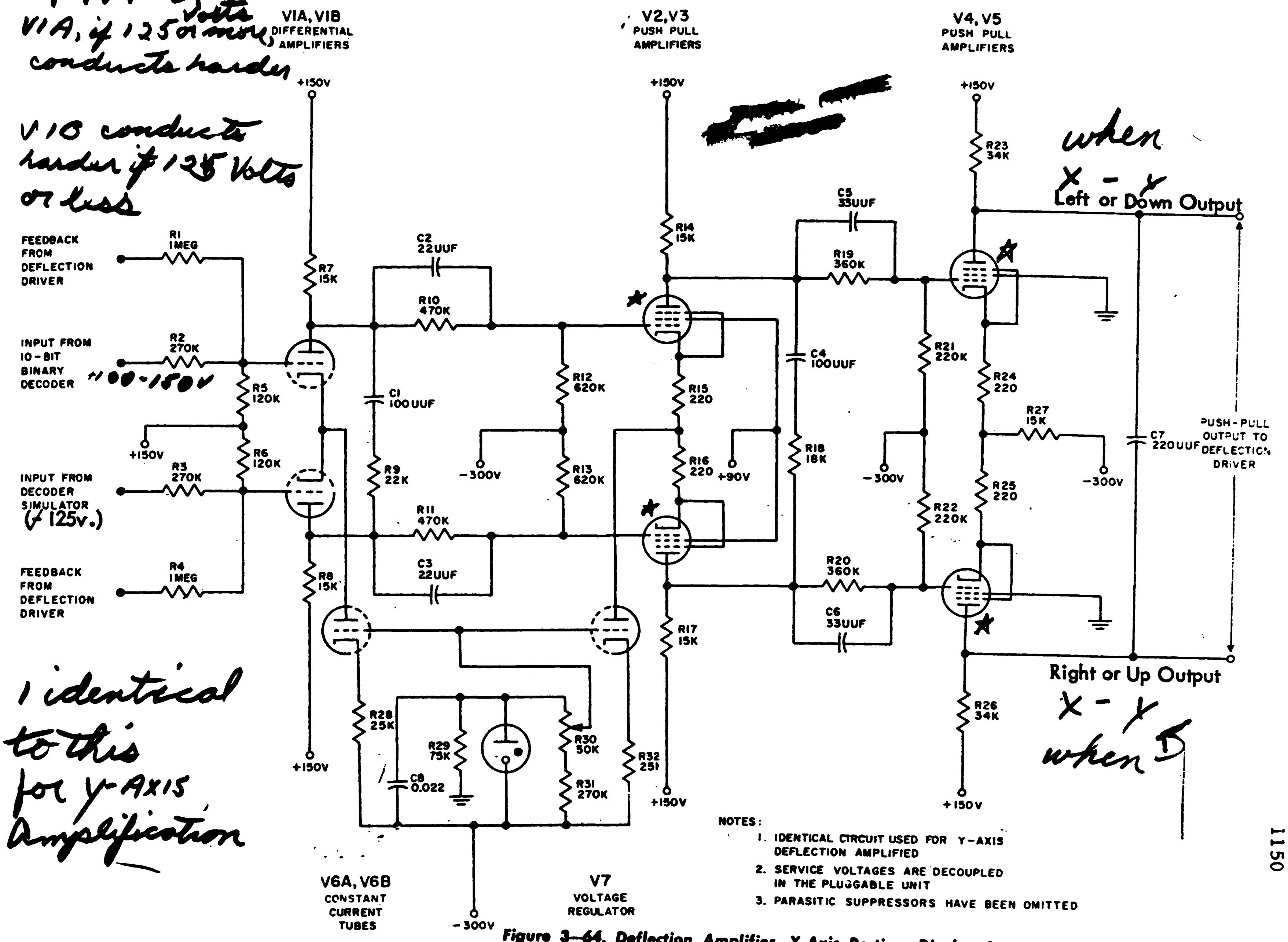

NOTES:

1. IDENTICAL CIRCUIT USED FOR Y-AXIS DEFLECTION AMPLIFIED
2. SERVICE VOLTAGES ARE DECOUPLED IN THE PLUGGABLE UNIT
3. PARASITIC SUPPRESSORS HAVE BEEN OMITTED

Figure 3-64. Deflection Amplifier, X-Axis Portion, Display System, Schematic Diagram

1 identical to this for Y-AXIS Amplification

returned to constant current tube V6B. The bias level for V6B, as for V6A, is determined by the setting of R30. Since the control grid voltages of both V2 and V3 are equal, the plate current of V6B is equally divided between V2 and V3.

(3) As a consequence of the equal plate currents, the plate voltages of V2 and V3 are both equal to + 105V. A potential of 405V exists across two identical dividers, one consisting of resistors R19 and R21 and the other consisting of R20 and R22. The voltage division performed by these voltage dividers is the same, and therefore the potentials at the control grids of V4 and V5 both equal--146V. Since pentodes V4 and V5 employ a common cathode resistor (R27) and their grid voltages are equal, the plate currents of V4 and V5 are equal. The resultant plate voltages of V4 and V5 equal + 40V.

(4) The output of the DA is the difference in potential that exists between the plates of V4 and V5. Since both plates are at the same potential in the above discussion, the output is zero. This output represents a message position at the center of the X-axis on the face of the SD CRT.

(5) Assume now that the voltage applied to the control grid of V1A is increased. This analog input represents a message position displaced from the X-axis center. This increase in grid voltage results in an increase in plate current and a resultant decrease in the plate voltage of V1A. The input to V1B is still maintained at its quiescent level of + 125V. Since the plate current for both V1A and V1B is supplied by a common constant current source (V6A), the plate current of V1B decreases by an amount equal to the increase in plate current by V1A. This results in a rise in the plate voltage of V1B that equals the decrease in V1A plate potential.

(6) The voltage divider comprised of R10 and R12 establishes a coupling ratio of 57 per cent between V1A and V2; therefore, only this percentage of the decrease in the plate voltage of V1A is coupled to the control grid of V2. The plate current of V2 decrease, causing the plate potential of V2 to increase. Since an identical coupling arrangement is used between V1B and V3, 57 per cent of the increase in the plate potential of V1B is coupled to V3. The resulting decrease in the plate voltage of V3 equals the rise in plate potential of V2.

(7) The coupling ratio employed between V2 and V4 and V3 and V5 is 38 per cent. This ratio is established by identical voltage dividiers used between the respective stages. As a result of the voltages appearing at the control grids, the plate potential of V4 decreases and the plate potential of V5 increases.

(8) The difference in potential between the plates of V4 and V5 represents a message position along the X axis on the face of the SD CRT. The magnitude of this voltage determines the displacement of the message from the X-axis center; the polarity determines the direction. The push-pull output of the DA is applied to the X-axis deflection driver. Refer to table 3--37 for the function of detail parts not discussed.

5) Deflection Driver

a. Definition and Description

(1) The deflection driver (DEF) is a nonlogic circuit which provides current to the deflection yoke of the SD CRT for message format positioning. The logic block symbol for the DEF is shown in figure 3--67.

TABLE 3-39. DEFLECTION DRIVER, FUNCTION OF DETAIL PARTS

REFERENCE SYMBOL	FUNCTION	REFERENCE SYMBOL	FUNCTION
R1, R2	Grid return for V1A and V1B, respectively	R8, R9	Damping network for one deflection coil
R3, R4	Cathode resistors for V1A and V1B, respectively	R10, R11	Damping network for other deflection coil
R5	Part of selective compensation RC network (with C1, C2, C3, and S1)	C1, C2, C3	Part of selective compensation RC network (with R5, S1)
R6, R7	Cathode resistor for V2A and V2B, respectively	S1	Selection switch for compensation network

(2) Two identical deflection drivers are employed in situation display, one for horizontal (X-axis) positioning and the other for vertical (Y-axis) positioning. The X-axis deflection driver is discussed below.

b). Basic Operation

(1) Figure 3-68 is the schematic diagram for the DEF. Table 3-39 lists the associated detail parts and their functions. The circuit consists of push-pull cathode follower circuit (V1A, V1B) and a push-pull power amplifier circuit (V2A, V2B).

Note: Refer to
Fig. 3-67
Fig. 3-68
Table 3-39
Page 1210

(2) The input to the DEF is a push-pull analog voltage that represents an X axis displacement. The outputs of cathode followers V1A and V1B are directly coupled to the grids of V2A and V2B, respectively. The plates of V2A and V2B are connected directly to the X-axis deflection coils; the center of these coils is returned to /600V. The putput of the DEF provides the SD yoke with the X-axis deflection currents. As a result of these currents, the yoke develops a magnetic field that positions the message on the face of the SD CRT. The strength of the field (flux density) is proportional to the current through the yoke. A linear relationship is established between the analog input voltage to the deflection amplifier and the resultant current output of the driver. This is accomplished by a degenerative feedback loop from the cathode of the driver to the input of the deflection amplifier.

c) Detailed Operation

(1) The operation of the DEF for X-axis center positioning is discussed first.

(2) When the message is positioned at the center of the face of the SD CRT, the voltages appearing at the grids of V1A and V1B are equal in amplitude and of the same polarity. The plate current of V1A is equal to that of V1B, developing equal potentials across the cathode resistors (R3 and R4, respectively). The output of V1A is directly coupled to the grid of V2A and V1B is directly coupled to the grid of V2B. Since these voltages are equal, the plate currents of V2A and V2B are equal. These currents are then fed to the X-axis deflection coils connected to each plate. Equal currents through the X-axis deflection coils result in a flux distribution which positions the electron beam in the center of the X-axis.

(3) For X-axis off center positioning, the DEF operates in the following manner. Assume

grid of V1A has increased. Since this voltage is obtained from the push-pull output of the deflection amplifier, the potential on the grid of V1B will decrease by an equal amount. The increased potential on the grid of V1A causes the plate current of V1A to increase, resulting in an increased voltage across cathode resistor R3. Simultaneously, the potential across cathode resistor R4 of V1B is decreased, due to the reduced voltage on the grid of this tube. The increase in voltage across R3 is directly coupled to the control grid of V2A, causing the plate current of this power amplifier to increase. The reduced output voltage of V1B, which is directly coupled to the grid of V2B, causes the plate current of V2B to be reduced an equal amount. This current unbalance through the X-axis deflection coils results in a flux distribution which deflects the electron beam away from the center.

d) Circuit Refinements

(1) Compensation for the nonlinear characteristics unique to the magnetic deflection circuit is accomplished by several circuit refinements to the DEF. An RC network is connected between the cathodes of V2A and V2B which compensate for any lag in flux response that may occur. Since the cathode resistors of V2A and V2B are not bypassed, cathode degeneration is introduced. Capacitor C2, which is part of the RC network mentioned, maintains the cathode at a constant potential during the transition time, preventing cathode degeneration and resulting in added gain during this time. This increased current gain during rise and fall time effects a speed-up in current rise and current fall. The flux density (upon which deflection is dependent) is directly proportional to this current. The overall result of this compensation will be a resultant flux level of the correct value, which will be reached within 30 usec, as compared to the 120 usec without compensation. Because a wide range of compensation is required, the RC network employed is of a selective nature, consisting of three capacitors (C1, C2, and C3), a selection

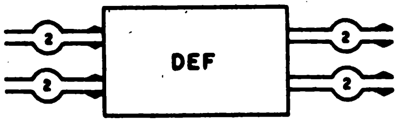

Figure 3—67. Deflection Driver, Logic Block Symbol

TABLE 3—39. DEFLECTION DRIVER, FUNCTION OF DETAIL PARTS

REFERENCE SYMBOL	FUNCTION
R1, R2	Grid return for V1A and V1B, respectively
R3, R4	Cathode resistors for V1A and V1B, respectively
R5	Part of selective compensation RC network (with C1, C2, C3, and S1)
R6, R7	Cathode resistor for V2A and V2B, respectively
R8, R9	Damping network for one deflection coil
R10, R11	Damping network for other deflection coil
C1, C2, C3	Part of selective compensation RC network (with R5, S1)
S1	Selection switch for compensation network

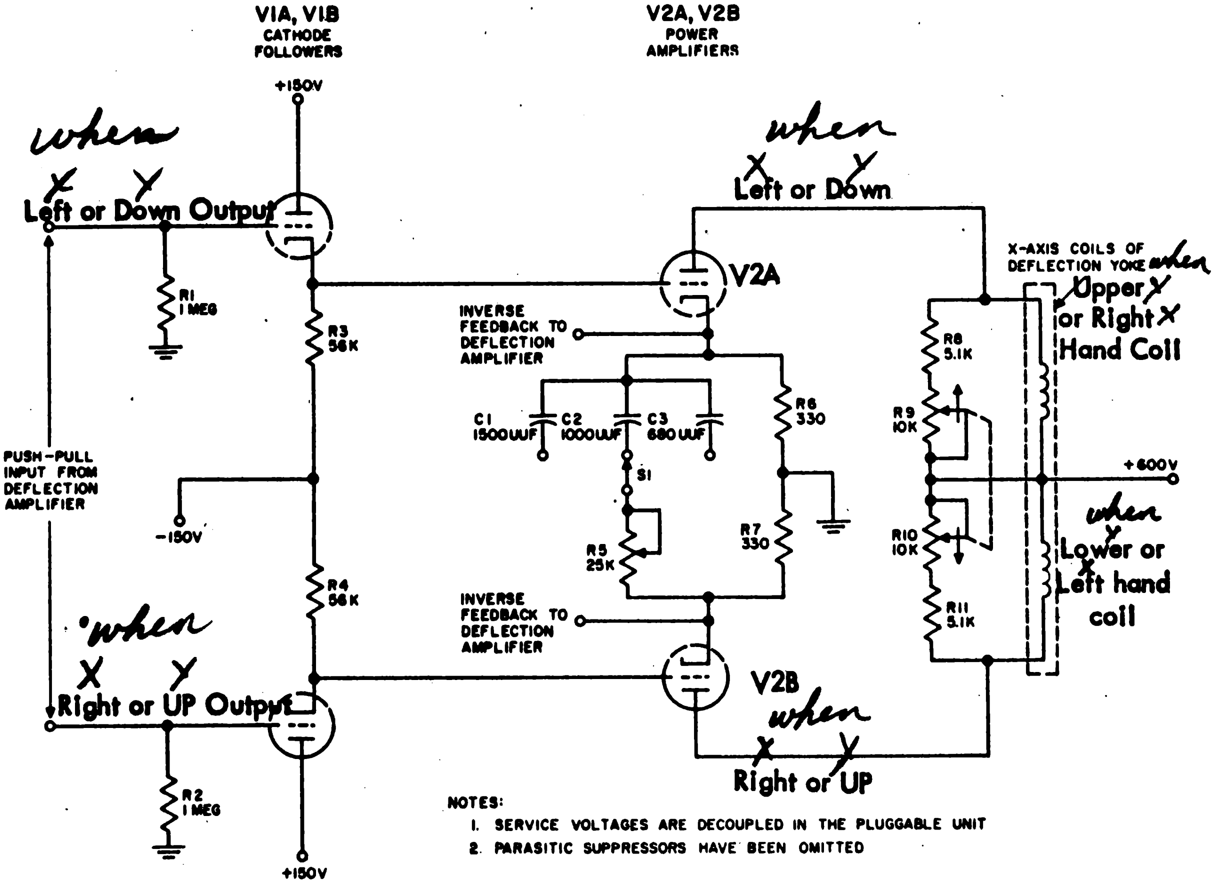

NOTES:
1. SERVICE VOLTAGES ARE DECOUPLED IN THE PLUGGABLE UNIT
2. PARASITIC SUPPRESSORS HAVE BEEN OMITTED

Figure 3—68. Deflection Driver, X-Axis Portion, Schematic Diagram switch (S1,) and a variable resistor (R5).

(2) Yoke ringing is prevented by damping resistors R8 and R9 across one-half of the deflection coil and R10 and R11 across the other half. R9 and R10 are variable resistors which are ganged to maintain the same registance-inductance ratio in both halves of the deflection coil.

15. Summary Questions

a. What is the purpose of the decoder simulator?

b. True or False

1. A binary decoder is used to change digital information into analog voltages.

2. The most significant stage of the decoder supplies twice as much current to the ladder network as the second most significant stage.

3. There are 1, 048, 576 different positions that a message could be placed on the SD CRT.

16. Message-Positioning and Expansion

a. General Information

1) A total of 26 bits is brought to the console for message-positioning, 13 for X and 13 for Y. These bits come from storage flip-flops in the registers of the SDGE. In the case of the first four bits in each group of 13 (LS-L3 and RS-R3), both outputs of the flip-flops are brought into the console. That is, both the 0 and 1 sides of eight of the register flip-flops are connected to the console circuits. Of the remaining message-positioning flip-flops, only the 1 side output is brought to the console.

2) All the positioning bits are sent to the expansion and off-centering relays, where they are channeled to the 10-bit binary decoder, and to the intensification circuits as required for the particular expansion, and/or off-centering. The 10 bits which are sent to each half (X and Y) of the decoder, in each case, determine the message position on the face of the SD CRT.

3) The binary address scheme used in the AN/FSQ 7 & -8 is shown in figure 4-22. This diagram represents the complete area assigned to a Direction Central and a Control Central. The representation can be thought of as an X1 display with a set of axes superimposed on it. The center of the co-ordinate axes (origin) is identified by the binary address of all 0's (only the X-axis is shown) and, therefore, conforms to the normal co-ordinate system in which the origin is identified as the zero point of both axes. This is done so that the Central Computer can treat the positioning of messages by conventional computer methods. The need for describing the center of the X1 display as having an address of all 0's, however, results in a complication of console circuits which will become evident in the following analysis.

Refer:
Fig. 4-22
Page 1260

4) Sending a +10 to a binary decoder stage increases its analog output and causes deflection to the right. A -30 at one of the decoder inputs reduces the analog output and therefore, tends to cause deflection to the left. If an all 0 bit input were applied to the decoder, all stages of the binary decoder would feel -30 and hence conduction would be to the extreme left. An all 1 bit input would apply +10 to all stages of the decoder, with the resultant deflection to the extreme right. These effects, however, do not agree with an earlier statement that all 0's would position an electron beam in the center of the CRT.

In order for an all 0 pattern to produce deflection to the center of the CRT, the input from the high order bit is reversed. When this situation exists, there is no deflection to the left as a result of the high order bit but the remaining bits are still capable of deflecting the beam to the center of the CRT. Refer to figure 4-22A for a basic understanding of the input wiring from the SDGE to a display console.

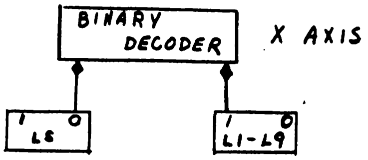

Figure 4 - 22A

The high order bit is the only bit whose input to the binary decoder can be switched from the 0 or 1 side by means of relays. The remaining low order inputs to a console (9) are always from the 1 side of FF's in the SDGE.

5. To summarize, bits LS through L9, used for positioning a message on the X1 display, will all be 0 for a message that is located at the center of the tube. Bit LS, the sign bit, is still spoken of as a 1 bit, although the complement (0) has actually been sent to the decoder. If any of the magnitude bits are changed to 1, the decoder output will increase and deflection will be to the right. Thus, as long as the sign bit is a 0, the message will be located on the right half of the viewing screen. If the sign bit were at 1, a 0 would be sent to the decoder as the most significant bit. If all the remaining bits were also 0, the message would be positioned to the extreme left side of the tube, point A in figure 4-22. If any of the magnitude bits were then changed to 1's, the message would be deflected to the right but would never be deflected beyond the center of the tube. The LS bit, when a 1, signifies that the message will be on the left side of the tube.

6. The fact that message-positioning can never occur on the right side of X1 display (once the sign bit is 1) is explained by the relative significance of the bits and the corresponding weighting which the bits receive in the binary decoder. Each bit is half as significant as the previous bit in a message-positioning address; that is, each bit exerts one-half the effect on the message position that the previous bit did. The sign bit, we have seen, can exert the maximum influence on the message position, since it can select that half of the tube to which the message will be deflected. The next bit is weighted only half as much in the binary decoder so that the net change in decoder analog output voltage for the second bit is only half that obtained by the sign bit. Therefore, the L1 bit can cause deflection over one quarter of the viewing screen. It can be seen then that, if the message address describing point A in figure 4-22 is altered so that L1 is a 1, the message will be deflected to the right

across one-quarter of the viewing screen to point B. Bit L2 is weighted half this much so that, if L2 is changed to a 1 bit, the message will be deflected across an additional one-eighth of the viewing screen to point C. Changing each of the remaining magnitude bits to 1 will move the message to the right, but by smaller and smaller decrements. The limit of the geometric series thus produced is the center of the viewing screen.

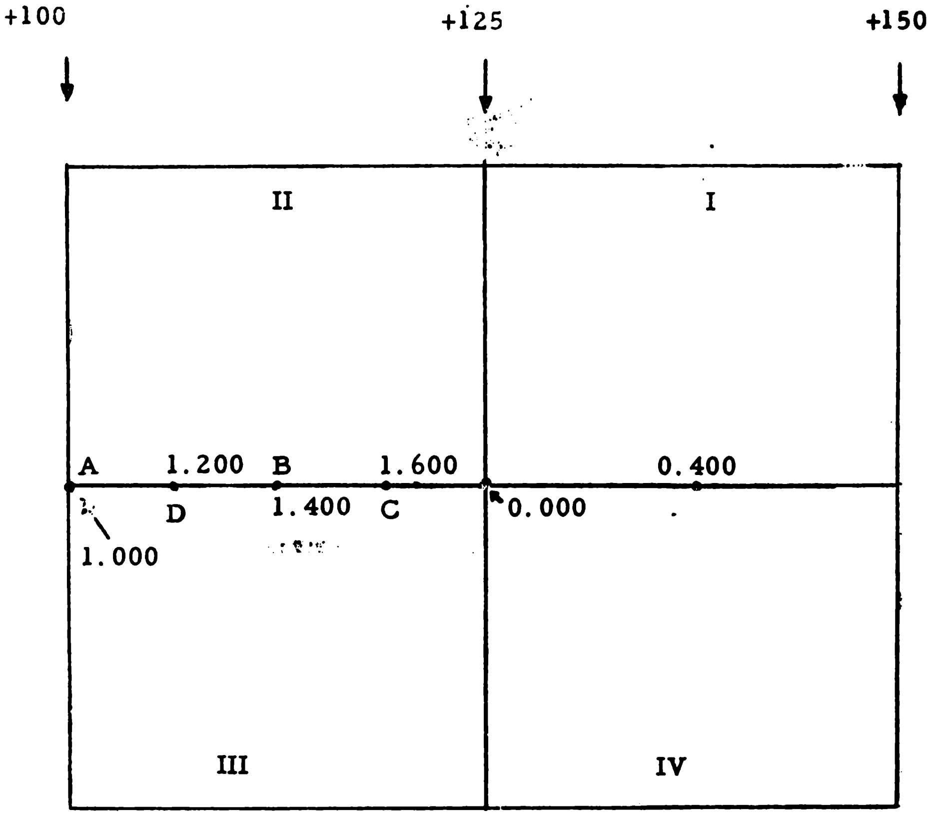

XI DISPLAY
Figure 4-22.

7. Note that the significance of each bit is independent of the stage of each previous bit. In the example given above, for instance, assume that the address of describing point A is altered so that bit L2 is changed to a 1 but bit L1 is left a 0. Then the message will move across 1/8 of the tube to point D. If L3-L9 are then changed to 1's, the message will approach point B as a limit, rather than the center of the viewing screen. It will never, however, reach point B. When L3-L9

are all 1's the message will be to the left of point B by the amount of the least significant digit, or will assume a position approximately several thousandths of an inch from point B.

8. In general, each point on the tube has two of the approximate addresses. The reason for this becomes apparent when the relative significance of the bits is considered. Since each bit is half as significant as the previous bit, the significance of any one bit is slightly greater than that of all subsequent bits, taken together (A simple addition of fractions will verify this). Thus, it is apparent that binary addresses 1100000000 and 1011111111 are approximately equivalent, differing only by the distance determined for the last digit.

9. An address of all 0's is considered to be the center of the tube, as shown in figure 4-22. Actually this address produces deflection to a point slightly to the right of center of the screen. An address of all 1's describes a point slightly to the left of the geometrical center of the screen. The differences between the addresses are minute and are significant only in that the all -0 address will appear in an expansion of the left half of the screen, while the all -1 address will appear in an expansion of the right half of the viewing screen.

b. Examples of Message Positioning

1) Message positioning with relation to binary address.

a) Examples of positioning according to address.

(1) X = 0.777 Y = 0.777 - Upper right hand corner. Refer to fig. on page 1310.

(2) X = 1.000 Y = 1.000 - Lower left hand corner.

(3) X = 0.000 Y = 0.000 - Slightly right and above center.

(4) X = 1.777 Y = 1.777 - Slightly left and below center.

2) Correlation between Decoder Output voltages and Message positioning.

a) Assume address of X = 0.777, Y = 0.777.

(1) Message should be positioned in upper right corner.

(2) Output voltage from decoders is maximum positive with this address.

(3) Resulting outputs from deflection amplifiers: Refer to page 1150

(a) Left Output minimum positive.
(b) Right Output maximum positive.
(c) Down Output minimum positive.
(d) Up Output maximum positive.

(4) Resulting conduction of deflection drivers. Refer to page 1210

(a) Minimum conduction of V2A thru right coil.
(b) Maximum conduction of V2B thru left coil. (Magnetic field pushes beam to the left)
(c) Minimum conduction of V3 thru up coil.
(d) Maximum conduction of V4 thru down coil. (Magnetic field pushes beam up)

(5) Resulting positioning

(a) Maximum magnetic field from left coil and minimum magnetic field from right coil.

(1) Positions beam to extreme right.

(b) Maximum magnetic field from down (bottom) coil and minimum magnetic field from up (upper) coil.

(1) Positions beam to extreme top.

      - (c) Combination of X and Y resulting in upper right corner.

- b) Assume address of X = 1.000, Y = 1.000
  - (1) Message should be positioned in lower left corner.
  - (2) Output voltage from decoders is minimum.
  - (3) Resulting outputs from deflection amplifiers.
    - (a) Right output maximum
    - (b) Left output minimum
    - (c) Up output maximum
    - (d) Down output minimum
  - (4) Resulting conduction of deflection drivers.
    - (a) Maximum current thru "right" coil.
    - (b) Minimum current thru "left" coil.
    - (c) Maximum current thru "up" coil.
    - (d) Minimum current thru "down" coil.
  - (5) Resulting positioning.
    - (a) Maximum magnetic field from right coil and minimum magnetic field from left coil.
      - (1) Positions beam to extreme left.
    - (b) Maximum magnetic field from up (upper) coil and minimum magnetic field from down (bottom) coil.
      - (1) Positions beam to extreme bottom.
    - (c) Combination of X and Y resulting in lower left corner.
- c) Assume address of X = 0.000, Y = 0.000
  - (1) Message should be positioned slightly right and slightly above physical center.

(2) Output voltage from decoders is slightly above midway between min. and max.

(3) Resulting outputs from deflection amplifiers.

(a) Left output slightly more positive than right output.

(b) Down output slightly more positive than up output.

(4) Resulting conduction of deflection drivers.

(a) Slightly more conduction thru left coil than right coil.

(b) Slightly more conduction thru down coil than up coil.

(5) Resulting positioning

(a) Slightly more magnetic field from left coil than right coil.

(1) Positions beam slightly to right of center.

(2) Slightly more magnetic field from down coil than up coil.

(a) Positions beam slightly above center

~~addresses shown are Drum addresses - have not been processed~~

1310

Off "[illegible]" sides of FF's #

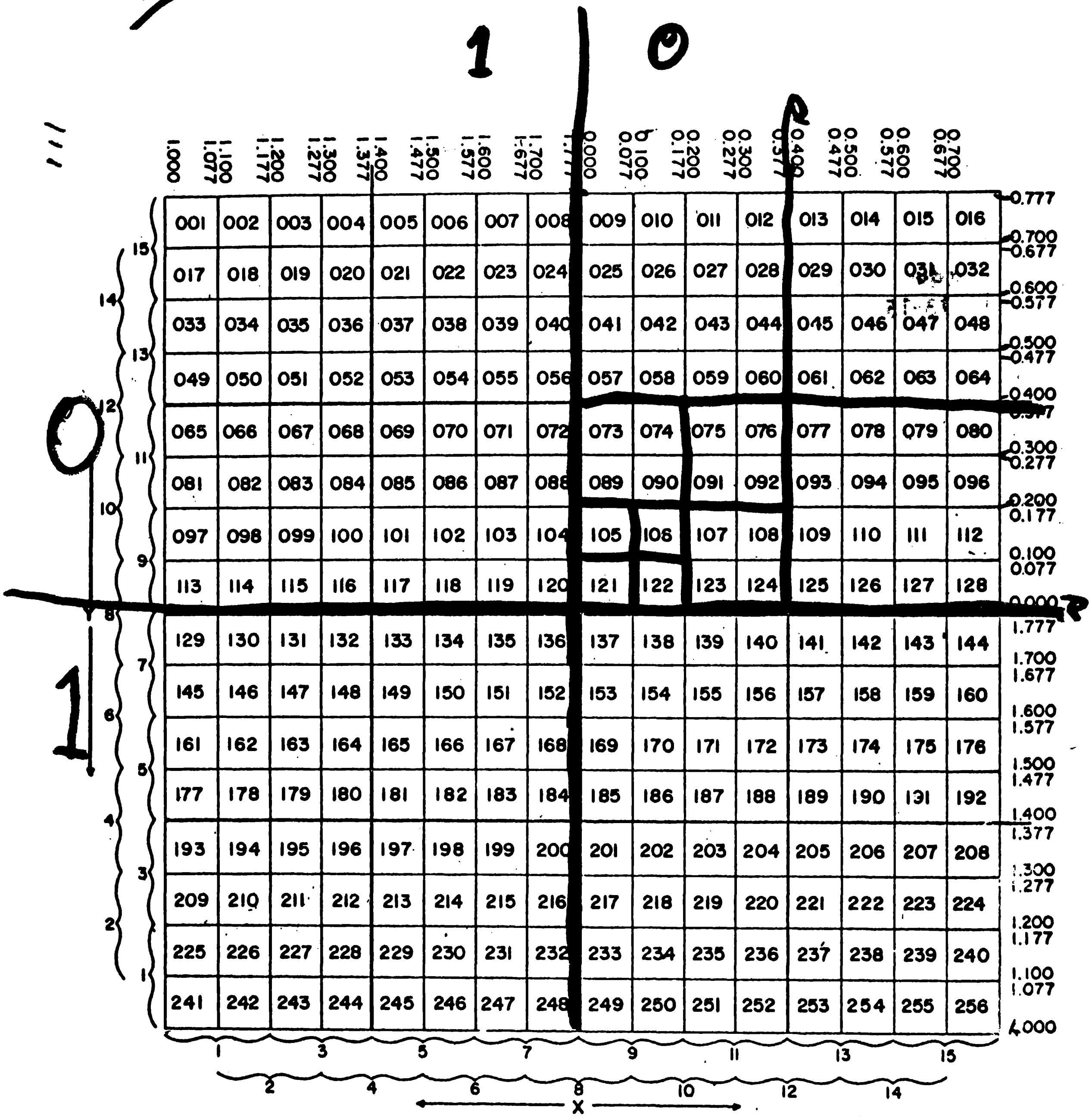

001	002	003	004	005	006	007	008	009	010	011	012	013	014	015	016
017	018	019	020	021	022	023	024	025	026	027	028	029	030	031	032
033	034	035	036	037	038	039	040	041	042	043	044	045	046	047	048
049	050	051	052	053	054	055	056	057	058	059	060	061	062	063	064
065	066	067	068	069	070	071	072	073	074	075	076	077	078	079	080
081	082	083	084	085	086	087	088	089	090	091	092	093	094	095	096
097	098	099	100	101	102	103	104	105	106	107	108	109	110	111	112
113	114	115	116	117	118	119	120	121	122	123	124	125	126	127	128
129	130	131	132	133	134	135	136	137	138	139	140	141	142	143	144
145	146	147	148	149	150	151	152	153	154	155	156	157	158	159	160
161	162	163	164	165	166	167	168	169	170	171	172	173	174	175	176
177	178	179	180	181	182	183	184	185	186	187	188	189	190	131	192
193	194	195	196	197	198	199	200	201	202	203	204	205	206	207	208
209	210	211	212	213	214	215	216	217	218	219	220	221	222	223	224
225	226	227	228	229	230	231	232	233	234	235	236	237	238	239	240
241	242	243	244	245	246	247	248	249	250	251	252	253	254	255	256

off "(1)" side for Direction Bit

S.D. EXPANSION CHART

Rules to use when associating octal addresses with Decoder output voltages.

Note: "Inverted" refers to bits as they appear on reverse side. or "0" side of the Flip Flop in the SDGE

I. Using "X1" scale all addresses are fed to decoder with the Sign bit inverted. (Example - Input from LS of FF in the SDGE)

II. Using "X2" scale all addresses are shifted one bit to the left, and the Sign bit of the resulting address is not inverted when the address is fed to the decoder. for Areas 1-7 and 9-15. It is inverted for Areas 5-11.

III. Using "X4" scale all addresses are shifted two bits to the left and the Sign bit of the resulting address is not inverted when address is fed to the decoder, for Areas 1-3, 5-7, 9-11, and 13-15 It is inverted for Areas 3-5, 7-9, and 11-13.

IV. Using "X8" scale:

a. If Areas 1, 3, 5, 7, 9, 11, 13, or 15 are selected, then the address is shifted three bits to the left and the Sign bit of the resulting address is not inverted when the address is fed to the decoder.

b. If Areas 2, 4, 6, 6, 10, 12, or 14 are selected, then the address is shifted three bits to the left and the Sign bit of the resulting address is inverted when the address is fed to the decoder.

EXPANSION	EXPANSION RELAYS	SECTION OF AXIS	OFF CENTERING RELAYS
X1	E	1—15	NONE
X2	NONE	1—7	CD
		5—11	BCD
		9—15	ACD
X4	G	1—3	D
		3—5	CD
		5—7	BD
		7—9	BCD
		9—11	AD
		11—13	ACD
		13—15	ABD
X8	F & G	1	NONE
		2	D
		3	C
		4	CD
		5	B
		6	BD
		7	BC
		8	BCD
		9	A
		10	AD
		11	AC
		12	ACD
		13	AB
		14	ABD
		15	ABC

and gates in Intensity Unit II

Y
X

+ gates bypassed (x58)

EXPAN- SION	Expansion Relays	Section of Axis	Off Cent Relays	Input to MS Stage	Bits to Decoder	AND 3				AND 4			
						AND 1				AND 2			
						1	2	3	4	1	2	3	4
X1	E's	1-15	NONE	S=0 **	S-9	*	*	*	*	*	*	*	*
X2	NONE	1-7	CD	1=1	1-10	S=1	1=0	+10	+10	S=1	1=1	+10	+10
		5-11	BCD	1=0		S=1	1=1	+10	+10	S=0	1=0	+10	+10
		9-15	ACD	1=1		S=0	1=0	+10	+10	S=0	1=1	+10	+10
X4	G	1-3	D	2=1	2-11	S=1	1=0	2=0	+10	S=1	1=0	2=1	+10
		3-5	CD	2=0		S=1	1=0	2=1	+10	S=1	1=1	2=0	+10
		5-7	BD	2=1		S=1	1=1	2=0	+10	S=1	1=1	2=1	+10
		7-9	BCD	2=0		S=1	1=1	2=1	+10	S=0	1=0	2=0	+10
		9-11	AD	2=1		S=0	1=0	2=0	+10	S=0	1=0	2=1	+10
		11-13	ACD	2=0		S=0	1=0	2=1	+10	S=0	1=1	2=0	+10
		13-15	ABD	2=1		S=0	1=1	2=0	+10	S=0	1=1	2=1	+10
X8	F&G	1	NONE	3=1	3-12	S=1	1=0	2=0	3=0	S=1	1=0	2=0	3=1
		2	D	3=0		S=1	1=0	2=0	3=1	S=1	1=0	2=1	3=0
		3	C	3=1		S=1	1=0	2=1	3=0	S=1	1=0	2=1	3=1
		4	CD	3=0		S=1	1=0	2=1	3=1	S=1	1=1	2=0	3=0
		5	B	3=1		S=1	1=1	2=0	3=0	S=1	1=1	2=0	3=1
		6	BD	3=0		S=1	1=1	2=0	3=1	S=1	1=1	2=1	3=0
		7	BC	3=1		S=1	1=1	2=1	3=0	S=1	1=1	2=1	3=1
		8	BCD	3=0		S=1	1=1	2=1	3=1	S=0	1=0	2=0	3=0
		9	A	3=1		S=0	1=0	2=0	3=0	S=0	1=0	2=0	3=1
		10	AD	3=0		S=0	1=0	2=0	3=1	S=0	1=0	2=1	3=0
		11	AC	3=1		S=0	1=0	2=1	3=0	S=0	1=0	2=1	3=1
		12	ACD	3=0		S=0	1=0	2=1	3=1	S=0	1=1	2=0	3=0
		13	AB	3=1		S=0	1=1	2=0	3=0	S=0	1=1	2=0	3=1
		14	ABD	3=0		S=0	1=1	2=0	3=1	S=0	1=1	2=1	3=0
		15	ABC	3=1		S=0	1=1	2=1	3=0	S=0	1=1	2=1	3=1

Drum Bits

X---Most significant stage of decoder conducting thru ladder section --- Left half of tube
X---Most significant stage of decoder not conducting --- Right half of tube
Y---Most significant stage of decoder conducting thru ladder section --- Bottom half of tube
Y---Most significant stage of decoder not conducting --- Top half of tube

* 1=0 - Bit 1 must be a 0 ** 1=1 Bit 1, set side 1=0 Bit 1, Clear side

c. Rotary Switch and Plugboard Control

1) Each console, as a rule, will have different tactical requirements that necessitate specific expansion and off-centering. To enable each console to be patched (or switch-connected) to the various circuits providing these voltage gradients, a control panel is provided for each console. This panel may contain a rotary switch or a plugboard (some of the older consoles may still have plugboards), as an interconnection device.

Newer consoles come equipped with (NAA) Normal Area Assignment circuitry. Since the NAA is a deviation from the Rotary switch it will not be covered here. The Display Maintenance manual has a check out procedure for the NAA.

2) Scale and Area Assignment

a) Varies between consoles

b) Example #1

(1) Contracted "X1"

(2) Normal "X2" (areas; X = 5 thru 11, Y = 5 thru 11)

(3) Expanded "X4" (3 pushbuttons for X, 3 for Y) (Select nine different areas)

c) Example #2

(1) Contracted "X1"

(2) Normal = X2 (Areas - X = 5 thru 11, Y = 5 thru 11)

(3) Expanded - X8 (7 pushbuttons for X and 7 for Y) (Select 49 different areas)

d) Example #3

(1) Contracted = X2 (Areas - X = 5 thru 11, Y = 5 thru 11)

(2) Normal = X4 (Areas - X = 7 thru 9,
Y = 7 thru 9)

(3) Expanded = X8 (3 pushbuttons)
(9 different areas)

e) General applications

(1) If expanded scale is twice the normal scale, 3 off-centering pushbuttons shall be used for X and Y.

(2) If expanded scale is four times the normal scale, 7 off-centering pushbuttons shall be used for X and Y.

(3) Expanded scale shall never be more than four times the normal scale.

(4) Expanded scale is always with reference to normal scale regarding area selection.

3) Expansion and Off-Centering Rotary Switches

a) At any one time, the SD console can have, at the most, three different levels of expansion assigned to it. These three levels correspond to the three positions of the EXPANSION switch. In addition, if CNTD is X1 and NORM is X2, or if CNTD is X2 and NORM X4, the automatic off-centering that occurs when switching from CNTD to NORM can, at any one time, select only one of a possible nine different areas; if CNTD is X1 and NORM X4, there are 49 different area selections.

b) In order to simplify the changing of these assignments, a set of four rotary switches (shown in fig. 4-23) is provided at the rear of the console. The switches perform the following functions in the indicated areas:

Refer Fig. 4-23
Page 1360

(1) S71-CONTRACT AREA: Perform expansion level and off-centering area assignments for CNTD position.

Topic § 4.2.2-2

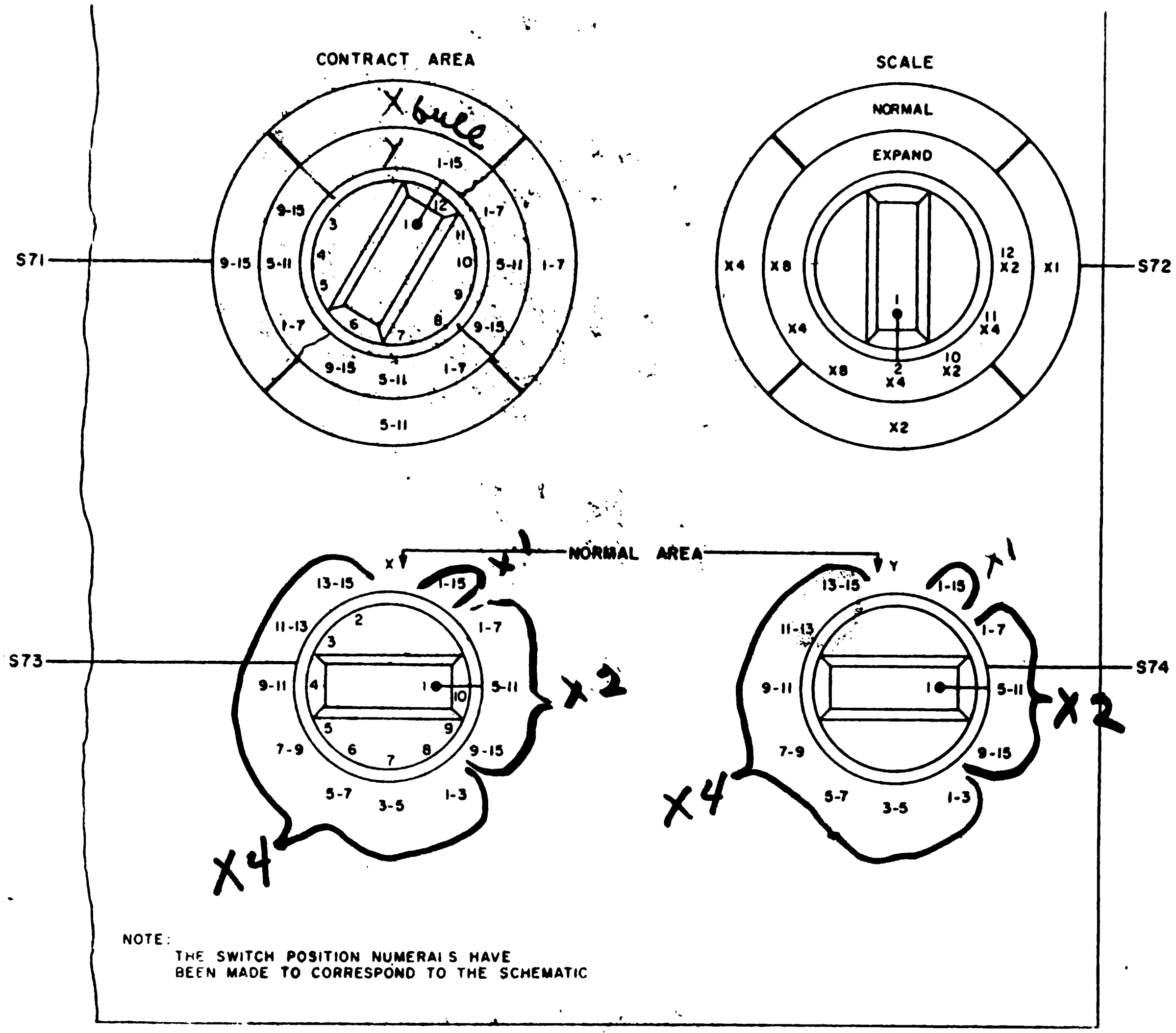

Figure 4—23. Expansion and Off-Centering Rotary Switches

TABLE 4—1. CONTRACT AREA SWITCH (S71), OFF-CENTERING ASSIGNMENTS VERSUS RELAY OPERATION

SWITCH POSITION		TERMINAL	RELAYS	OPERATED
X	Y	See figs. 4—23 and 4—24	X	Y
~~—~~	~~1—15~~ X' /	12	—	—
1—7	1—7	11	CD	CD
1—7	5—11	10	CD	BCD
1—7	9—15	9	CD	ACD
5—11	1—7	8	BCD	CD
5—11	5—11	7	BCD	BCD
5—11	9—15	6	BCD	ACD
9—15	1—7	5	ACD	CD
9—15	5—11	4	ACD	BCD
9—15	9—15	3	ACD	ACD

X2

(2) S72-SCALE: Perform expansion level assignments for NORM and EXPD positions.

(3) S73-NORMAL AREA X: Perform X axis off-centering assignments in NORM position.

(4) S74-NORMAL AREA Y: Perform Y axis off-centering assignments in NORM position.

c) A schematic of the circuits involved is shown in figure 4-24. The switches are connected to actuate the relays located at the top of the illustration. The relays consist of two groups: the expansion level relays at the upper right and the off-centering relays at the upper left. All of the relays are identified by a K number on the illustration, as well as an arbitrarily assigned letter designation. The latter will be used in the following subparagraphs. The expansion relays consist of Ex, Ey, Fx, Fy, Gx, Gy. Operation of relay Ex, for instance, means that both K58 and K59 are energized. In the case of the expansion relays both x and y axis relays operate simultaneously in order that both axes display the same expansion level. The off-centering relays are referred to as Ax through Dx and Ay through Dy.

Refer Fig. 4-24, Page 3570

d) Figure 4-24 does not show the expansion relay contacts; it shows only the coils and circuitry which provide the energizing voltages. Later it will be shown how operation of these relays produces the various expansion levels and off-centering selections. For the present it is sufficient to know that relays Ex and Ey must be energized to produce an X1 display; Gx and Gy to obtain X4; and both the F and G relays to obtain X8. Expansion level X2 is obtained with all expansion relays de-energized.

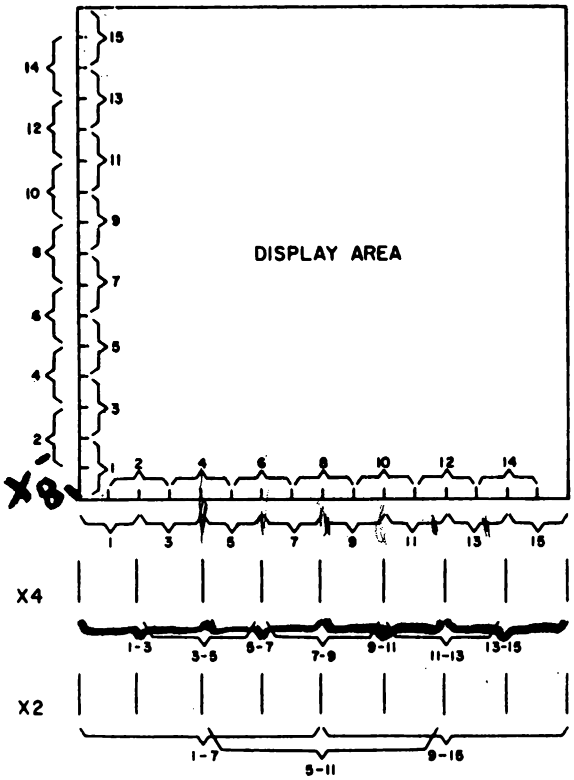

Figure 4—25. Division of X1 Display

TABLE 4—4. OFF-CENTERING ASSIGNMENTS VERSUS RELAY OPERATION, X8 EXPANSION

SEGMENT SELECTION	RELAYS OPERATED
1	—
2	D
3	C
4	CD
5	B
6	BD
7	BC
8	BCD
9	A
10	AD
11	AC
12	ACD
13	AB
14	ABD
15	ABC

TABLE 4—2. SCALE SWITCH (S72), EXPANSION LEVEL SELECTIONS

SWITCH POSITION		TERMINAL	RELAYS	OPERATED
NORMAL	EXPAND	(See figs. 4—23 & 4—24)	NORM	EXPD
X1	X2	12	E	—
X1	X4	11	E	G
X2	X2	10	—	—
X2	X4	9	—	G
X2	X8	8	—	F & G
X4	X4	7	G	G
X4	X8	6	G	F & G

e) The various off-centering selections are obtained by energizing A, B, C, and D relays in various combinations. Figure 4-25 shows how the X1 display is divided into 15 overlapping segments in each axis. These basic segments are numbered 1-15. For X2 expansion, each axis is divided into 3 segments, as shown for the X axis. The first section includes segments 1-7, the second 5-11 and the third 9-15. The y axis is divided in the same manner. The result of this division is to provide the nine overlapping areas, any of which will fill the entire usable portion of the SD CRT in expansion level X2.

Refer Fig 4-25
Page 1380

f) For X4 expansion, the X1 display has been divided into seven sections along each axis; this is also shown in figure 4-25 for the x axis. Each section consists of three of the basic segments with 50 per cent overlap between each set of three. There are thus 49 divisions of the X1 display, any one of which will fill the SD CRT face in X4 expansion. In expansion level X8, one of the basic segments of the X1 display is expanded to fill the SD CRT face; there are, therefore, 225 possible X8 expansion segments.

g) Contracted Expansion Level and Area Assignment

(1) CONTRACT AREA switch (S71) is used for setting the expansion level and off-centering for the CNTD position of the EXPANSION switch. As shown in figure 4-24, this switch has three sections: A, B, and C. The arms of all three sections are connected to ground through a contact of the EXPANSION switch, when the latter is in the CNTD position. Since one terminal of all the relay coils is connected to a -48V source, the other terminal need only be connected to

ground to energize the relay. The three sections of S71 can only supply this ground when the EXPANSION switch is in the CNTD position.

(2) Terminal 12 (position 1-15) of section C is connected to the E relays so that the Ex and Ey relays operate in the energized position and thus obtain an X1 display. There are no connections made to sections A and B in this position. Relays A-D are not energized, and, hence, there is no off-centering selection. This is to be expected since the X1 display is the frame of references or unexpanded display. In positions 3 through 11, the E relays are not energized. The F and G relays are also not energized, and hence, an X2 expansion is obtained. Each of these positions, in addition to selecting an X2 display, selects a different combination of segments in the x and y axis.

(3) Reference to table 4-1 shows that all three possible segment selections (1-7, 5-11, 9-15) require that relays C and D be energized for both x and y. This is accomplished by terminals 3-11 of section C. Sections A and B are used to energize the A and B relays, depending upon which segment is selected. For example, terminal 3 (position 9-15 in X and position 9-15 in Y) of section A energizes relay Ay; and similarly, section B energizes relay Ax. The operation of relays A, B, and C selects, according to table 4-1, segments 9-15. In this case, segments are selected in each axis.

Refer to
Table 4-1
Page 1360

h) Normal and Expanded Expansion Level Selections

(1) The SCALE switch (S72), a 6-pole

rotary switch, selects the expansion level for the NORM and EXPD positions of the EXPANSION switch (S28) by providing ground returns for the expansion relays through EXPANSION switch (S28) for section A in the NORM position, and for sections B and D in the EXPD position. Ground returns for the off-centering relays are provided through section C and through S28 in the NORM position. Sections E and F provide ground returns for off-centering relays Dx and Dy through S28 in the EXPD position.

(2) As an example of how the switch functions, assume that S28 is in the NORM position and that S72 is at terminal 12 (NORMAL X1, EXPAND X2). Of the six switch sections, only A, E, and F will be in the circuit at this time. The arm of section A will receive a ground through S28 and will apply it to the E relays. Since sections E and F receive a ground through the EXPD position of S28, they are ineffective now. Thus, the switch has only accomplished the operation of the E relays and produced an X1 expansion level. If the EXPANSION switch (S28) is now turned to the EXPD position without turning S72, relays E will no longer operate. None of the expansion relays will now operate since terminal 12 of sections B and D is not wired, thereby producing an X2 expansion level. Sections E and F will operate the D relays since these relays are always energized in X2 and X4 expansions. Table 4-2 lists the expansion levels selected by the S72 for both NORM and EXPD.

Refer Table 4-2
Page 1380

TABLE 4—3. NORMAL AREA X AND Y SWITCHES (S73 AND S74), OFF-CENTERING ASSIGNMENTS VERSUS RELAY OPERATION

SWITCH POSITION	EXPANSION LEVEL (S72)	TERMINAL (See figs. 4—23 and 4—24)	RELAYS OPERATED
1—15	X1	12	—
1—7	X2	11	CD
5—11	X2	10	BCD
9—15	X2	9	ACD
1—3	X4	8	D
3—5	X4	7	CD
5—7	X4	6	BD
7—9	X4	5	BCD
9—11	X4	4	AD
11—13	X4	3	ACD
13—15	X4	2	ABD

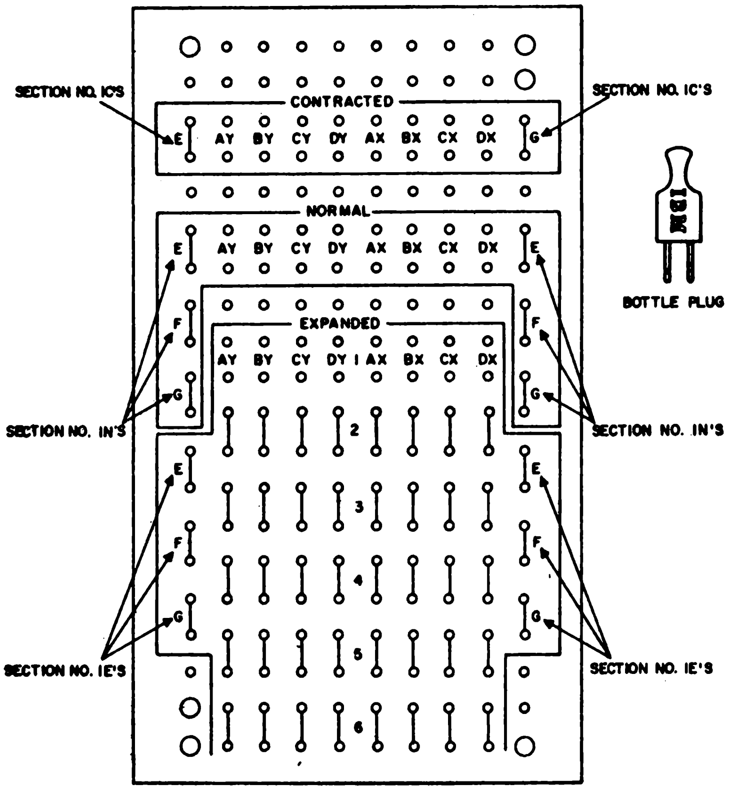

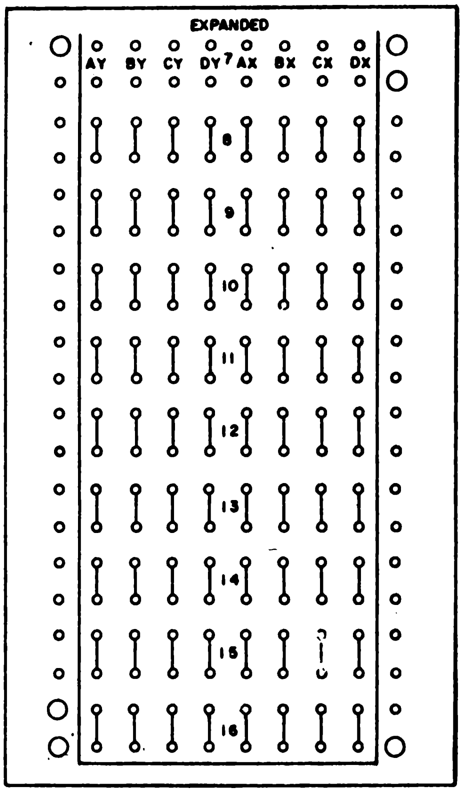

i) Normal Area Off-Centering Selections

(1) Sections E and F of the NORMAL AREA X and Y switches (S73 and S74) perform the function of off-centering area selection in the NORM position of S28. The arms of sections E and F and the Dx and Dy relays are returned to ground through terminals 6-10 (X2 and X[illegible] expansion levels) of section C of S72 and the NORM position of S28, thus making operative combinations of the off-centering relays. Table 4-3 lists the selections made by switches S73 and S74 for NORM operation.

Refer Table 4-3
Page 1420

(2) As shown in table 4-3, no relays are operated in position 1-15 (terminal 12) of switches S73 and S72, and hence no area selection occurs. In the other 10 positions of switches S72 and S73, reference to table 4-3 shows the NORMAL expansion level used with each position and the off-centering relays energized in each position.

j) Expanded Area Off-Centering Selections

(1) Since the area that will be selected in the EXPD position of S28 will be a portion of the area selected in the NORM position, there is some necessary relation between NORM and EXPD. Sections A, B, C, and D of the NORMAL AREA X and Y switches (S73 and S74) perform this function. A similar relationship between NORM and CNTD is not required since AN/FSQ -7 programming does not require that the NORM display necessarily be part of the CNTD display. (This, of course, is in cases where the CNTD off-center area displayed is on the X2 level of expansion.)

(2) off-centering selection for expanded operation is accomplished by the console operator by depressing one X axis and one Y axis pushbutton. One contact of each of the pushbuttons is grounded through the EXPD position of EXPANSION switch (S28), and one or more of the other contacts are wired through sections A, B, C, and D of switches S73 and S74 to the off-centering relays. As an example of operation, assume pushbutton Y4 (see fig. 4-24) is depressed and that S74 is on terminal 11. (This means the normal display was an X2 expansion level showing segments 1-7). Assume also that an X8 expansion level is selected on the EXPAND scale of S72 (terminal 8). Since one contact of each pushbutton is grounded, depressing button Y4 grounds three leads. The first of these goes to S74, B12, and C11. Since S74 is on terminal 11, grounding of B12 is ineffective, but C11 which is therefore energized. The second of the three leads goes to S74, B4, B10, C3, C5, and C7 and is therefore ineffective. Operation of pushbutton Y4 has therefore energized relays Cy and Dy. Reference to table 4-4 indicates that segment 4 is selected for display.

Refer:
Table 4-4
Page 1380

(3) A comparison of table 4-4 with figure 4-24 indicates that the switches are wired so that each of the pushbuttons selects one of the segments that was displayed in the NORM position.

k) Incorrect Combinations

(1) There are many ways to set up the expansion and off-centering switches incorrectly. For instance, seven pushbuttons are required for off-centering selection when NORM is X2 and ESPD is X8. This number is necessary because each X2 display encompasses seven segments (1-7, 5-11, 9115). Since only one segment is displayed in X8, there must be a choice provided for each of the seven. If NORM is X4, only three segments are displayed (1-3, 3-5, 5-7, etc.), and, hence, if EXPD were X8, only three pushbuttons are masked off. There exists the possibility, however, that the SD console is assigned X2 in NORM and X8 in EXPD (requiring seven pushbuttons), and, yet, SCALE switch (S72) is mis-set to select X4 (terminal 6 instead of terminal 8) for the NORM display. The four unneeded

pushbuttons are now unmasked and can be used to select méaningless combinations of relay operation by the console operator. There are a number of other ways in which meaningless relay combinations can be obtained, so great care on the part of the technician is required when he changes the expansion and off-centering requirements of the console. One rule that can be followed is that seven buttons are required if the EXPD level is four times the NORM level (X4 and X1, or X8 and X2). If the EXPD level is only twice the NORM level (X2 and X1, X4 and X2, or X8 and X4), only three pushbuttons are required.

l) Summary of Rotary Switches

  (1) Switch Layout

    (a) Four switches used

      (1) S71

        (a) Selects contracted scale and areas.

      (2) S72

        (a) Selects normal and expanded scales.

      (3) S73 and S74

        (a) Selects normal areas.

  (2) Wiring of Switches

    (a) Assume console assignment of contracted X1, normal X2 (areas X = 5 thru 11, Y = 5 thru 11) Expanded 8.

    (b) Relays that should be energized.

      (1) Contracted - "E"

      (2) Normal - "B", "C", and "D".

      (3) Expanded (F and G)

        (a) S1 - "B"

        (b) S2 - "B" and "D"

(c) S3 - "B" and "C"

(d) S4 - "B", "C", and "D".

(e) S5 - "A"

(f) S6 - "A" and "D"

(g) S7 - "A" and "C"

(3) Switch Positions

(a) S71

(1) Switched to "1-15" position Wafers A, B, and C in position 12 as shown.

(b) S72

(2) Switched to "normal X2-Expanded 8" position. Wafers A thru F in position 8.

(c) S73 and S74

(3) Switched to "5-11" position. All wafers of both switches in position 10.

(4) Expansion Switch S28

(a) In contracted position

(1) Energize "E" Relay

(b) In normal position

(1) Energize B, C, and D Relays

(c) Expanded position

(1) Energize F and G

(2) Energize A, B, C, or D Relays by off-centering pushbuttons.

(5) Plugboard

(a) The plugboard (or control panel) is shown in figure 4-26, and its associated circuits are shown in figure 4-27, foldout, and are

Refer: Fig. 4-26
Page 1420
Fig. 4-27
Page 3580

discussed in Logic 4.2.2. It has been divided into three sections as shown for ease of understanding. This division does not correspond to the actual physical layout of the plugboard.

(b) Connections are made in the control panel by the insertion of bottle plugs. The bottle plug is a 2-pronged plug which fits into two adjacent jacks on the board. For ease of illustration, the two jacks which receive the bottle plug are shown on the diagram as one jack (an open circle). The two lines which intersect at each jack are not connected to each other until a plug is inserted. Without the plug, both lines bypass the jacks. For example, in the lower section (marked section 3 on the drawing), any of the horizontal lines, marked 1x-16x, can be connected by means of plugs to any of the four lines running up to the four X off-centering relays.

(c) The relays concerned here are identified by a K number on the illustration. For ease of discussion, however, the relays will be identified by means of a letter designation also shown on the diagram. Thus, the expansion relays consist of Ex, Ey, Fx, Fy, Gx, and Gy. Operation of relay Ex, for instance, means that both K58 and K59 have operated.

Similarly, the off-centering relays are referred to as relays Ax-Dx and Ay-Dy.

(d) Plugboard Section 1

(1) The jacks in this section are used for connecting the expansion relays to the EXPANSION switch in such a manner that the three positions of the EXPANSION switch will correspond to the type of displays assigned to the particular console. There is a specific relay assignment for each level of expansion. Once it is known which expansion levels are to be assigned to each of the three positions of the EXPANSION switch, the corresponding part of the control panel can be patched up.

(2) For instance, to produce an X1 expansion, relays Ex and Ey must be operated. (In all cases, X and Y expansion relays are operated at the same time to avoid the possibility of having one expansion in the X direction and another in the Y direction. The above arrangement is wired into the console, and the operator need not concern himself with it.) Four poles of the EXPANSION switch are shown connected to the first section of the control panel. For example, if the CNTD position is to produce an X1 display, the Cs line going to the relay line is plugged so that relay operation will be secured at this position of the switch. By plugging the Ns 1 or Ns 2 on the E relay line, an X1 display can be obtained in the NORMAL position of the switch.

(3) For an X2 display, none of the expansion relays should operate; hence, no plugs are used on whatever switch position is devoted to the X2 display. For an X4 display, relay G must operate. An X8 display may be assigned to either the NORMAL or EXPANDED positions of the EXPANSIONS switch. Regardless of which position the X8 display is to assume, however, the two relays are not patched to the same pole of the EXPANSION switch. If relays F and G are to be patched up to the EXPANDED position, one of them should be plugged to the EX 1 line and the other to the ES 2 line. If they were both plugged to the same line, two relays would remain interconnected permanently by means of the horizontal line between jacks so that, if relay G remained connected for the NORMAL position, relays F and G would also operate in the NORMAL position. Therefore, whenever two of the EXPANSION relays are to be connected to a particular EXPANSION switch position, they should always be connected to different sections of the switch.

(e) Plugboard Section 2

(1) As stated previously, the console operator has no control over the segment of the CONTRACTED display that he sees when the EXPANSION switch is turned to NORMAL. This segment is assigned to the console on a tactical basis. Likewise, if the CONTRACTED display is anything but an X1 display, the particular segment that will be seen in CONTRACTED is assigned.

(2) This assignment of off-centering position is accomplished through the use of control panel section 2. The off-centering relays, Ax through Dx and Ay through Dy, are connected to control panel section 2 through eight poles of the EXPANSION switch. In the CONTRACTED position, any of the eight relays can be connected by means of a plug to the Cs line. In the NORMAL position, they can be connected to the Ns 1 line. In this way, the -48V return for any of the relays can be completed through the switch, thus achieving operation.

(3) Figure 4-25 shows how the X1 display is divided into 15 overlapping segments in each axis. For an X2 expansion, each axis is divided into three sections, as shown in the figure. The first section consists of segments 1-7, the second section consists of segments 5-11, and the third section consists of segments 9-15. The Y-axis is divided up in the same way. The result of this division is to provide nine overlapping areas, any one of which will fill the entire usable portion of the SD CRT when an X2 expansion is being displayed.

(4) For an X4 expansion, the X1 display has been divided up into seven sections along each axis. This is also shown in figure 4-25. Each section is seen to consist of three of the basic segments with 50-per cent overlap between each set of three. There are, thus, 49 divisions of the X1 display, any one

of which will fill the SD CRT face. when an X4 expansion is displayed.

(5) The remaining level of expansion is the X8 display. In this expansion, one of the basic segments of the X1 display is expanded to fill the SD CRT face; there are, thus, 225 possible X8 expansions.

(6) To produce display of any particular segment of the X1 display in an X2, X4, or X8 expansion requires a different combination of relays. Table 4-5, part A, summarizes the relay connections that must be made to assign any particular segment to the CNTD position of the EXPD switch. For instance, if the X2 expansion is assigned to the CNTD position, there will be three possible assignments of sector in each axis. Inserting plugs on the Cs line for relays Cx and Dx will produce, in the x axis, the display of segments 5-11. For an X4 expansion, there are seven choices in each axis, as shown.

(7) Table 4-5 part B, provides the same information for the NORM position of the switch. Note that this position can be assigned an X8 expansion and therefore, has 225 possibilities for that display.

Refer:
Table 4-5
Page 1520

(f) Plugboard Section 3

(1) This section of the plugboard is devoted to the OFF-CENTERING switches and contains the jacks that are connected to the off-centering relays through the EXPD position of the EXPANSION switch. Table 4-5, part C, summarizes the connections that must be made for each OFF-CENTERING button for each level of expansion.

(2) Column 1 of table 4-5, part C, describes those connections that are needed for producing an X2 display in the EXPD position.

Table 4-5
Part C
Page 1530

As stated earlier, none of the expansion relays is to be operated for this level of expansion, and, hence, control panel section 1 is not plugged. Since the EXPD display is to be X2, the largest number of OFF-CENTERING buttons needed will be three. (NORMAL is X1 and, therefore, an X2 expansion can provide only nine segments to choose from. This can be seen from figure 4-25. If NORM is X2, then no expansion is possible between the NORM and EXPD positions.) Thus three buttons are required for each axis. Examination of table 4-5, part C, will reveal that, for the EXPD position of the switch, the OFF-CENTERING buttons accomplish precisely what is performed by the patching done on control panel section 2. In the example used in plugboard section 2, segments 5 through 11 were selected for the X-axis by energizing relays Bx, Cs, and Dx. To wire up OFF-CENTERING button IV to accomplish the same thing requires that leads 6x, 7x, and 8x (see fig. 4-27) be connected to relays Bx, Cx, and Dx, respectively. In this manner, identical relay operation is achieved, although the return for the relays is now picked up through the first contact of OFF-CENTERING button IV.

Refer: Fig. 4-25
Page 1380

Fig. 4-27
Page 3580

(3) For an X4 display in the EXPD position, there are two possibilities, depending on whether the NORM display is X2 or X1. In the case of the X1 NORM DISPLAY, there will be 49 possible sectors to select from for an X4 EXPD display, and hence seven buttons in each axis are required (See fig. 4-25) Column 5 of table 4-5 is applicable here. If the NORM display is an X2 expansion, however, there will be only three sectors to choose from in each axis, and, hence, only three OFF-CENTERING buttons in each will be required since the X2 expansion will have already selected a particular area from the X1 display.

A

S28, EXPANSION-SWITCH POSITION	OFF-CENTERING ASSIGNMENTS, CONTRACTED										
EXPANSION SCALE	X1	X2			X4						
PLUGBOARD SECTION 1 C_8 TO (SEE NOTE 1)	E	OPEN			G						
OFF-CENTER POSITION, X AXIS (SEE NOTE 2)	1-15	1-7	5-11	9-15	1-3	3-5	5-7	7-9	9-11	11-13	13-15
CONTRACTED SECTION OF PLUGBOARD (SEE NOTE 3)	OPEN	$C_x D_x$	$B_x C_x D_x$	$A_x C_x D_x$	D_x	$C_x D_x$	$B_x D_x$	$B_x C_x D_x$	$A_x D_x$	$A_x C_x D_x$	$A_x B_x D_x$
OFF-CENTER POSITION, Y AXIS (SEE NOTE 2)	1-15	1-7	5-11	9-15	1-3	3-5	5-7	7-9	9-11	11-13	13-15
CONTRACTED SECTION OF PLUGBOARD (SEE NOTE 3)	OPEN	$C_y D_y$	$B_y C_y D_y$	$A_y C_y D_y$	D_y	$C_y D_y$	$B_y D_y$	$B_y C_y D_y$	$A_y D_y$	$A_y C_y D_y$	$A_y B_y D_y$

NOTE:
1. REFER TO FIGURE 3-8 FOR PLUGBOARD SECTION LOCATION.
2. REFER TO FIGURE 3-10 FOR SECTOR LOCATIONS.
3. REFER TO FIGURE 3-8 FOR LOCATION OF TERMINALS TO BE SHORTED.

B

S28, EXPANSION-SWITCH POSITION	OFF-CENTERING ASSIGNMENTS, NORMAL										
EXPANSION SCALE	X1	X2			X4						
PLUGBOARD SECTION 1 N_8 TO (SEE NOTE 1)	E	OPEN			G						
OFF-CENTER POSITION, X AXIS (SEE NOTE 2)	1-15	1-7	5-11	9-15	1-3	3-5	5-7	7-9	9-11	11-13	13-15
NORMAL SECTION OF PLUGBOARD (SEE NOTE 3)	OPEN	$C_x D_x$	$B_x C_x D_x$	$A_x C_x D_x$	D_x	$C_x D_x$	$B_x D_x$	$B_x C_x D_x$	$A_x D_x$	$A_x C_x D_x$	$A_x B_x D_x$
OFF-CENTER POSITION, Y AXIS (SEE NOTE 2)	1-15	1-7	5-11	9-15	1-3	3-5	5-7	7-9	9-11	11-13	13-15
NORMAL SECTION OF PLUGBOARD (SEE NOTE 3)	OPEN	$C_y D_y$	$B_y C_y D_y$	$A_y C_y D_y$	D_y	$C_y D_y$	$B_y D_y$	$B_y C_y D_y$	$A_y D_y$	$A_y C_y D_y$	$A_y B_y D_y$

B (CONT'D)

S28, EXPANSION-SWITCH POSITION	OFF-CENTERING ASSIGNMENTS, NORMAL (CONT'D)														
EXPANSION SCALE	X8														
PLUGBOARD SECTION 1 N_8 TO	G AND F (ON OPPOSITE SIDES)														
OFF-CENTER POSITION, X AXIS	1	2	3	4	5	6	7	8	9	10	11	12	13	14	15
NORMAL SECTION OF PLUGBOARD	OPEN	D_x	C_x	$C_x D_x$	B_x	$B_x D_x$	$B_x C_x$	$B_x C_x D_x$	A_x	$A_x D_x$	$A_x C_x$	$A_x C_x D_x$	$A_x B_x$	$A_x B_x D_x$	$A_x B_x C_x$
OFF-CENTER POSITION, Y AXIS	1	2	3	4	5	6	7	8	9	10	11	12	13	14	15
NORMAL SECTION OF PLUGBOARD	OPEN	D_y	C_y	$C_y D_y$	B_y	$B_y D_y$	$B_y C_y$	$B_y C_y D_y$	A_y	$A_y D_y$	$A_y C_y$	$A_y C_y D_y$	$A_y B_y$	$A_y B_y D_y$	$A_y B_y C_y$

TABLE 4–5. EXPANSION AND OFF-CENTERING PLUGBOARD CONNECTIONS

TABLE 4–5. EXPANSION AND OFF-CENTERING PLUGBOARD CONNECTIONS (cont'd)

C

S28, EXPANSION-SWITCH POSITION		OFF-CENTERING ASSIGNMENTS, EXPANDED																		
EXPANSION SCALE		X2			X4															
PLUGBOARD SECTION I E_s TO (SEE NOTE I)		OPEN			G															
NUMBER OF PUSHBUTTONS		3													7					
NORMAL PLUGBOARD SECTION SET FOR EXPANSION RATIO		X1			X2										X1					
PUSHBUTTON NUMBER		II	IV	VI	II	IV	VI	II	IV	VI	II	IV	VI	I	II	III	IV	V	VI	VII
OFF-CENTER POSITION OF PUSHBUTTON (SEE NOTE 2)		1-7	5-11	9-15	1-3	3-5	5-7	5-7	7-9	9-11	9-11	11-13	11-15	1-3	3-5	5-7	7-9	9-11	11-13	13-15
EXPANDED PORTION OF PLUGBOARDS J35 & J36 (SEE NOTE 3)	ROW # 1	*			*			*			*			D_x						
	2	C_x			D_x			B_x			A_x			C_x						
	3	D_x			OPEN			D_x			D_x			D_x						
	4	*			*			*			*			B_x						
	5	*			*			*			*			D_x						
	6	B_x			C_x			B_x			A_x			B_x						
	7	C_x			D_x			C_x			C_x			C_x						
	8	D_x			OPEN			D_x			D_x			D_x						
	9	*			*			*			*			A_x						
	10	*			*			*			*			D_x						
	11	A_x			B_x			A_x			A_x			A_x						
	12	C_x			D_x			D_x			B_x			C_x						
	13	D_x			OPEN			OPEN			D_x			D_x						
	14	*			*			*			*			A_x						
	15	*			*			*			*			B_x						
	16	*			*			*			*			D_x						

C (CONT'D)

S28 EXPANSION SWITCH POSITION		OFF CENTERING ASSIGNMENTS-.XPANDED (CONT'D)																																									
EXPANSION SCALE		X8																																									
PLUGBOARD SECTION I E_s TO		G AND F (ON OPPOSITE SIDES)																																									
NUMBER OF PUSHBUTTONS		3																					7																				
NORMAL PLUGBOARD SECTION SET FOR EXPANSION RATIO		X4																					X2																				
PUSHBUTTON NUMBER		II	IV	VI	I	IV	VI	II	IV	VI	II	IV	VI	II	IV	VI	II	IV	VI	II	IV	VI	I	II	III	IV	V	VI	VII	I	II	III	IV	V	VI	VII	I	II	III	IV	V	VI	VII
OFF-CENTER POSITION OF PUSH BUTTON		1	2	3	3	4	5	5	6	7	7	8	9	9	10	11	11	12	13	13	14	15	1	2	3	4	5	6	7	5	6	7	8	9	10	11	9	10	11	12	13	14	15
EXPANDED PORTION OF PLUGBOARDS J35 & J36 (SEE NOTE 3)	ROW # 1	*			*			*			*			*			*			*			OPEN							B_x							A_x						
	2	OPEN			C_x			B_x			B_x			A_x			A_x			A_x			D_x							B_x							A_x						
	3	OPEN			OPEN			OPEN			C_x			OPEN			C_x			B_x			OPEN							D_x							D_x						
	4	*			*			*			*			*			*			*			C_x							B_x							A_x						
	5	*			*			*			*			*			*			*			OPEN							C_x							C_x						
	6	D_x			C_x			B_x			B_x			A_x			A_x			A_x			C_x							B_x							A_x						
	7	OPEN			D_x			D_x			C_x			D_x			C_x			B_x			D_x							C_x							C_x						
	8	OPEN			OPEN			OPEN			D_x			OPEN			D_x			D_x			OPEN							D_x							D_x						
	9	*			*			*			*			*			*			*			B_x							A_x							A_x						
	10	*			*			*			*			*			*			*			OPEN							OPEN							B_x						
	11	C_x			B_x			B_x			A_x			A_x			A_x			A_x			B_x							A_x							A_x						
	12	OPEN			OPEN			C_x			OPEN			C_x			B_x			B_x			D_x							D_x							B_x						
	13	OPEN			OPEN			OPEN			OPEN			OPEN			OPEN			C_x			OPEN							OPEN							B_x						
	14	*			*			*			*			*			*			*			B_x							A_x							A_x						
	15	*			*			*			*			*			*			*			C_x							C_x							B_x						
	16	*			*			*			*			*			*			*			OPEN							OPEN							C_x						

* ROW NOT IN CIRCUIT

NOTE: ROWS 1-16 SHOWN FOR X COLUMNS ONLY. DUPLICATE FOR Y COLUMNS

Information is provided in the table for the three possibilities in each axis. Thus, if the X2 expansion had selected segments 1-7, the OFF-CENTERING buttons would be wired up as shown in column 2. Columns 3 and 4 provide the information needed for the other two possibilities.

There are again the two major possibilities for the X8 display in the EXPD position. If the NORM position is an X2 expansion, segments 1-7, for example, there will be 49 possible EXPD displays, and all OFF-CENTERING buttons will be required. In this case, columns 13, 14, and 15 are applicable. If the NORM display is an X4 expansion, only three pushbuttons are required in each axis, and columns 6-12 are applicable. In any case, the X8 expansion will produce display of only one of the basic segments of the X1 display.

g) Situation Display Test Pattern Switch

(1) The -48V return for the expansion and off-centering relays in the CNTD, NORM, and EXPD positions of the EXPANSION switch is obtained through one section of the SD test pattern switch. When this switch is in either of the TEST positions, only the E expansion relays are operated, thereby ensuring an X1 display for the test pattern.

h) Expansion Plugboard Physical Layout

Fig. 4-26
Page 1420
Table 4-5
Page 1520

(1) Three sections

(a) Contracted

(1) Effective only when expansion switch is in contracted position.

(2) Assign X1 Scale

(a) Bottle plug in "E"

(3) Assign X2 Scale

(a) No bottle plugs in "E" or "G".

(b) Bottle plugs in "A" "B", "C", or "D" depending on what areas are desired.

(4) Assign X4 Scale

(a) Bottle plug in "G"

(b) Bottle plugs in "A", "B", "C", or "D" depending on what areas are desired.

(b) Normal

(1) Effective only when expansion switch is in "normal position."

(2) Assign "X1" Scale

(a) Bottle plug in "E"

(3) Assign "X2" Scale

(a) No bottle plugs in "E", "F", or "G".

(b) Bottle plugs in "A", "B", "C", or "D" depending on what areas are desired.

(4) Assign "X4" Scale

(a) Bottle plug in "G"

(b) Bottle plugs in "A", "B", "C", or "D" depending on what areas are desired.

- (5) Assign "X8" Scale
    - (a) Bottle plugs in "F" and "G"
    - (b) Bottle plugs in "A", "B", "C", or "D" depending on what areas are desired.

(c) Expanded

- (1) Effective only when expansion switch is in expand position.
- (2) Individual horizontal rows (1 thru 16) associated with off-centering switches.
- (3) Off-centering switch numbering.
    - (a) Horizontal - left to right switches 1X thru 7 X.
    - (b) Vertical - bottom to top switches 1Y thru 7Y.
- (4) Association of plugboard with off-centering switches.
    - (a) Switch 1 (X or Y) - Row 1.
    - (b) Switch 2 (X or Y) - Rows 2 and 3.
    - (c) Switch 3 (X and Y) - Rows 4 and 5.
    - (d) Switch 4 (X and Y) - Rows 6, 7, and 8.
    - (e) Switch 5 (X or Y) - Rows 9 and 10.

(f) Switch 6 (X or Y) - Rows 11, 12 and 13.

(g) Switch 7 (X or Y) - Rows 14, 15, and 16.

(5) Reason for multiple row assignment for off-centering switches.

(a) Prevent back-circuits causing undesired energizing of off-centering relays.

(b) Example - assume a console is wired contracted "X1", normal "X2", (selecting areas 5 thru 11 for X and Y), and expanded X8.

(c) Wiring of plugboard as follows

(d) Contracted - plug "E"

(e) Normal - Plug Bx, Cx, Dx, By, Cy, Dy.

(f) Expanded - Plug F and G (<u>erroneous wiring of Expanded Section of Plugboard</u>.

Row 1 - Plug Bx, By
Row 2 - Plug Bx, By, Dx, Dy
Row 3 - Blank
Row 4 - Plug Bx, By, Cx, Cy
Row 5 - Blank
Row 6 - Plug Bx, By, Cx, Cy, Dx, Dy
Row 7 - Blank
Row 8 - Blank
Row 9 - Plug Ax, Ay
Row 10 - Blank
Row 11 - Plug Ax, Ay, Dx, Dy

Row 12 - Blank
Row 13 - Blank
Row 14 - Plug Ax, Ay, Cx, Cy
Row 15 - Blank
Row 16 - Blank

(g) Result
Contracted - Pick "E" Relay
Normal - Pick Bx, Cx, Dx, By, Cy, Dy Relays
Expanded - Pick F and G Relays
Switch 1 depressed - Pick "B", C, D Relays (Only "B" should be energized)
Switch 2 depressed - Pick A, B, C, D Relays (Only B and D relays should be energized
Switch 3 depressed - Pick A, B, C, D Relays (Only B, C relays should be energized.

(g) Switch 4 depressed - Pick A, B, C, D Relays (Only A, B, C, D relays should be energized)
Switch 5 depressed - Pick A, B, C, D Relays (Only A relay should be energized.)
Switch 6 depressed - Pick A, B, C, D Relays (Only A and D relays should be energized.)
Switch 7 depressed - Pick A, B, C, D Relays (Only A and C relays should be energized.)

(h) Correct wiring of expanded section of plugboard.
Row 1 - Plug Bx, By
Row 2 - Plug Bx, By
Row 3 - Plug Dx, Dy
Row 4 - Plug Bx, By
Row 5 - Plug Cx, Cy
Row 6 - Plug Bx, By
Row 7 - Plug Cx, Cy
Row 8 - Plug Dx, Dy
Row 9 - Plug Ax, Ay
Row 10 - Open
Row 11 - Plug Ax, Ay
Row 12 - Plug Dx, Dy
Row 13 - Open

Row 14 - Plug Ax, Ay
Row 15 - Plug Cx, Cy
Row 16 - Open

(i) If expanded is "X4" only Switches 2, 4, and 6 are used.

5) Magnitude Bit Selection

a) Figure 4-28 and logic 4. 2. 2 show the contacts of the expansion relays that are used for positioning the selection, exclusive of the most significant bit. Nine of the ten inputs to the binary decoder are shown at the right of the illustration. The tenth decoder input, corresponding to the most significant bit, is discussed later.

Fig. 4-28
Page 1610

b) A number of relay contacts for the three expansion relays are shown. In each group of contacts that feed one of the binary decoder inputs, there is one armature and two contacts from each of the three expansion relays. Only the X-positioning circuits are shown, since the Y section is identical except for nomenclature.

c) Considering the case of the X1 expansion, assume that only the E relay is operated. The only bit of the first four that can be on the digit 1 line will be L1. An open circuit will be present for each of the other three bits. If each group of contacts is traced, it will be found that the X1 display, positioning bits L1-L9 will be admitted to the binary decoder on the digit 1-9 lines, respectively.

d) For the X2 expansion, when no relays are operated, bits L2-L10 will be admitted to the decoder. For an X4 expansion, when relay G is operated, bits L3-L11 will go to the decoder. For an X8 expansion, bits L4-L12 will get through the contacts to the decoder. Note that the selection of inputs 1-9 to the decoder is dependent only on the expansion level selected by the EXPANSION switch. Off-centering does not play a part in it.

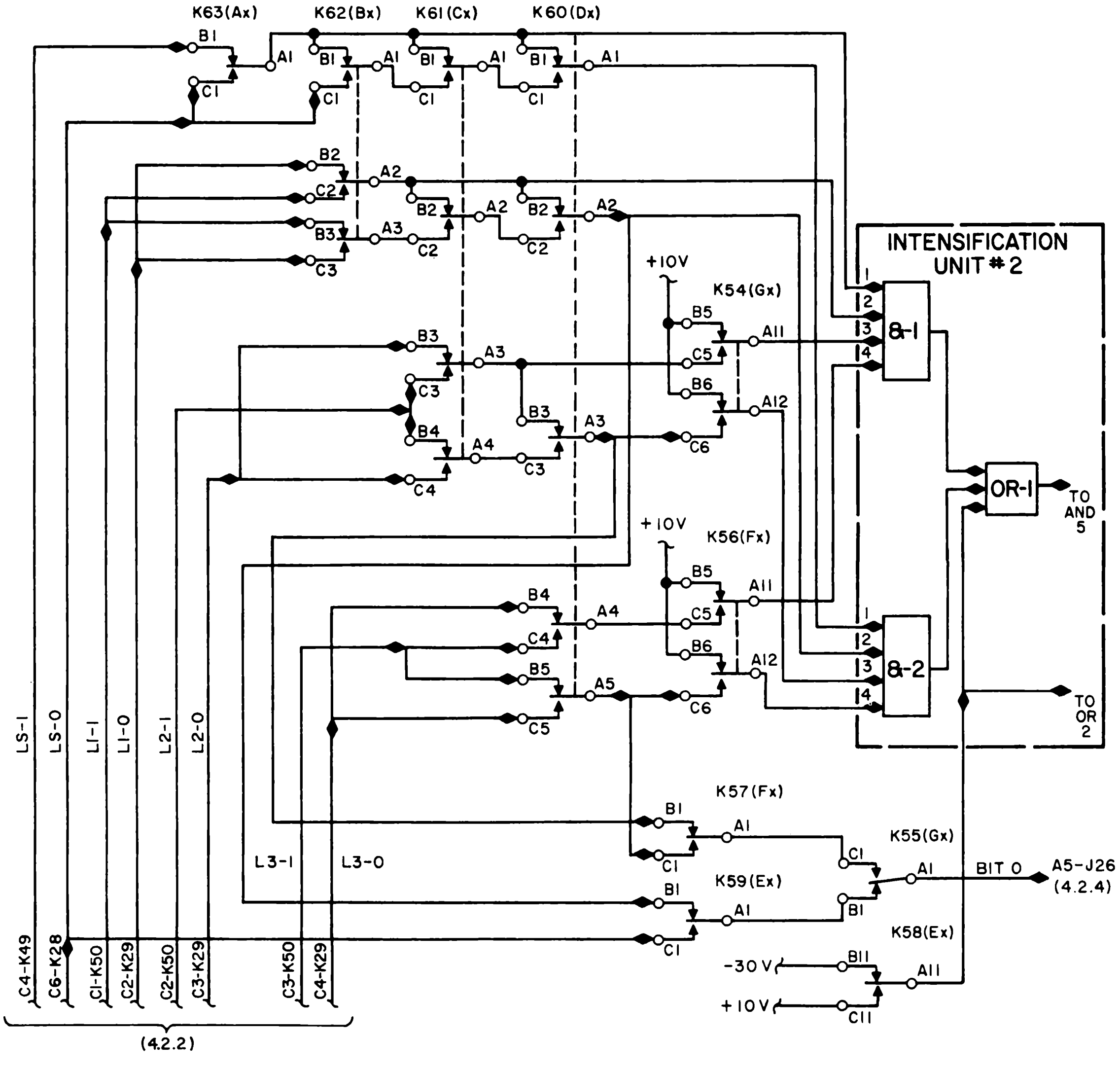

Figure 4—29. Digit 0 Selection and Intensification Selection

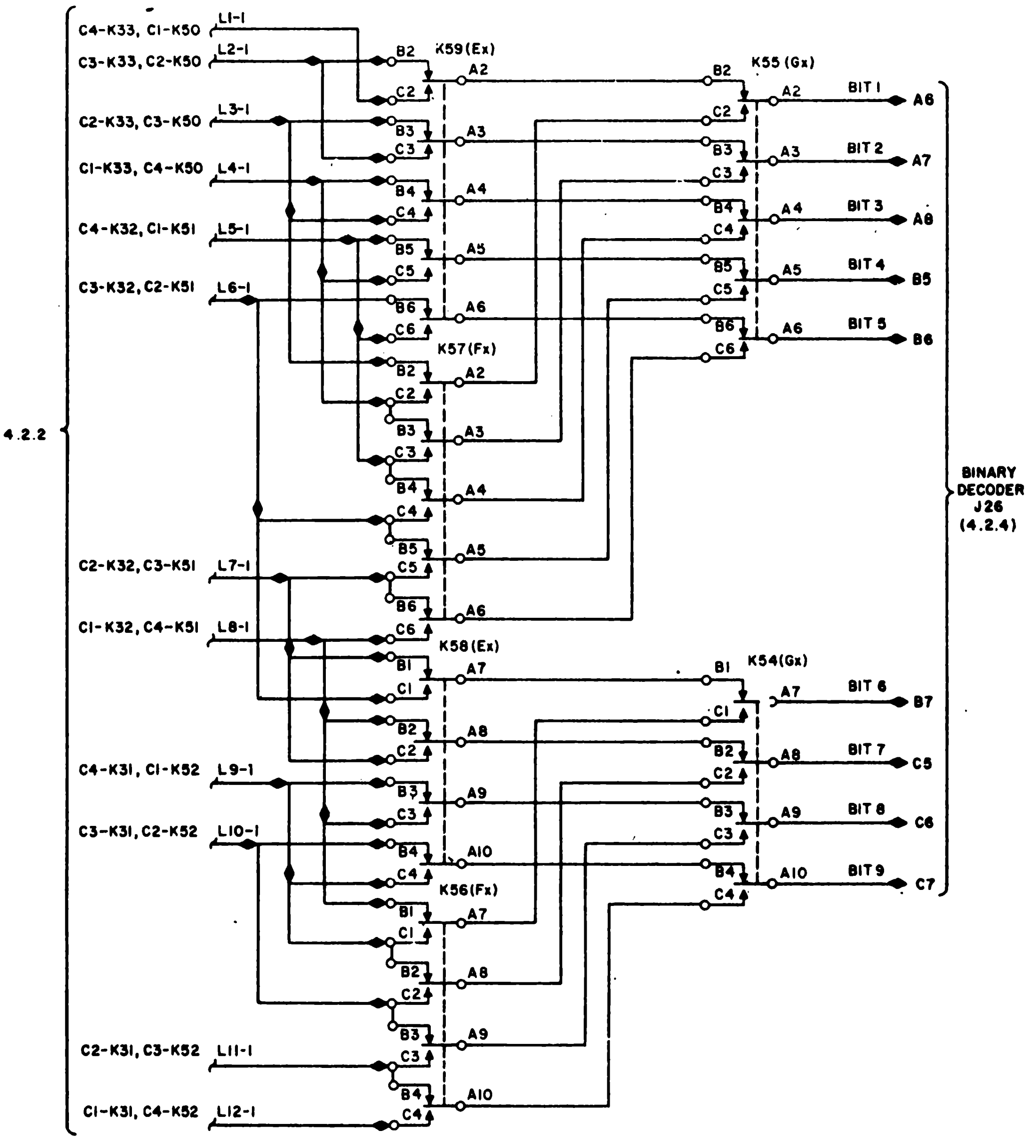

Figure 4–28. Magnitude Bit Selection Relay Contact

6) Digit 0 Selection, X2, Expansion

a) Figure 4-29 illustrates the X-axis contacts which are used for message intensification and digit 0 selection. It is to this part of the message positioning circuitry that both the 1 and 0 sides of the LS-L3 bits are connected. Fig. 4-29 Page 1600

b) The expansion relay contacts involved in the selection of digit 0 are at the bottom of the illustration. Each of the three expansion relays is involved in a relay tree which is connected into various points in the network of off-centering relay contacts. The number of possible signals that could go out as digit 0 are seven, two sides of each of the three bits and the 0 side of the LS bit. The bit that is selected will depend both on the expansion and the off-centering of the display.

c) If an X1 expansion is being displayed, only relay E of the expansion relays will be operated, and, hence, only one of the seven bits can get through as digit 0; namely, that from the 0 side of the LS register flip-flop through the normally open Ex-1 contact. If a message had arrived at the console with all of its positioning bits 0, nine bits would go to the decoder as digits 1-9, but the most significant bit, LS, would go to the decoder on the digit 0 line as a 1. (The output of the 0 side of a flip-flop will be a 1 if the output of the 1 side is a 0.) Thus, an address which consisted of all 0's has been converted (as far as the binary decoder is concerned) into an address containing a 1 followed by nine 0's. The resultant message position will be at the extreme left of the viewing screen. If the LS bit had not been reversed in the manner described, the message would have been positioned at the center of the tube, since putting all 0's into the decoder produces a minimum output analog voltage. If the input address had been a 1 followed by all 0's, the LS bit would still be reversed so that the message address going into the decoder would be all 0's, producing deflection to the extreme left side of the tube. In this manner, the most significant bit is used to select which half of the tube the message will appear on. At the same time, this bit (the sign bit) is treated by the decoder in the same way it treats each of the magnitude bits. In other words, the decoder does not know that the LS bit is the sign bit. (It apparently is only another magnitude bit.) Thus, it is the relays which give the sign bit its ability to select the correct side of the tube for a given message display.

If an X2 expansion is being displayed, none of the expansion relays will be operated, and the only way for a bit to go out on the digit 0 line is for it to go through normally closed contacts Ex-1 and Gx-1. This means that the most significant bit going to the binary decoder will be either the 1 or 0 side of the L1 bit, depending on the operation of the off-centering relays Bx, Cx, and Dx.

d) Reference to table 4-5, part A, will show that there are three combinations of off-centering relay operations during the display of an X2 expansion. The three combinations are Cx and Dx, for segments 1-7; Bx, Cx, and Dx for segments 5-11; and Ax, Cx, and Dx for segments 9-15.

Table 4-5
Page 1520

e) When Cx and Dx are operated, the 1 side of the L1 bit goes through normally closed contact Bx-3 and normally open contacts Cx-2 and Dx-2. Thus, when selecting segments 1-7, no sign bit reversal takes place. The reason for not reversing the most significant bit in this follows from the fact that they are going in on the digit 0 line, instead of the digit 1 line. Two messages which have the same L1 bits, but different L2 bits, will similarly be spaced twice as far apart as before because the L2 bits now go into the decoder on the digit 2 line and are, therefore, twice as influential as formerly in affecting message position. The same discussion applies to all of the bits of the address. Segments

9-15 are selected for an X2 expansion by relays Ax, Cx, and Dx. The Ax relay does not enter into the selection of the digit 0. However, as far as positioning bits are concerned, this will be the same situation as that for the selection of segments 1-7; that is, the 1 side of the L1 bit is selected as the digit 0 and there is no reversal of the sign bit. The difference in circuit operation occurs in the intensify circuitry where, because of the operation of relay Ax, only the messages that were formerly in segments 9-15 (right half of the X1 display) will be displayed.

h) To select the center section of the X1 display for the X2 expansion (segments 5-11), relays Bx, Cx, and Dx must operate. Tracing out the circuitry associated with the L1 bit will reveal that only the 0 side of the L1 bit can get through to the decoder by means of operated contacts Bx-3, Cx-2, and Dx-2. This means that, as in the X1 display, there is a reversal of the most significant bit.

i) The reversal is necessary, here, because of the way in which the center segments of the X1 display are selected for an X2 expansion. As explained in connection with the X2 expansions discussed above, areas of the X1 display are selected for expanded viewing by altering the set of position bits sent to the binary decoder and by not intensifying messages that belong in segments other than the ones desired for display. In expanding segments 1-7, segments 9-15 were not intensified. There are, however, two areas capable of being displayed simultaneously on the SD CRT; the areas are an expansion of segments 1-7 and an expansion of segments 9-15. Only the first was intensified. In the second case (discussed above), only segments 9-15 were intensified. Now, however, there arises the problem of intensifying the right half of segments 1-7 and the left half of segments 9-15; these constitute segments 5-11 as shown in figure 4-30.

j) But the right half of expanded segments 1-7 is now on the right half of the tube and the left half of segments 9-15 is now on the left of the tube. Both are in the wrong half of the tube as far as an X2 expansion of the 5-11 segments is concerned. That is, the right half of segments 1-7, which comprise the left half of segments 5-11, is on the right half of the tube although intensification of the 5-11 segments would require it to be on the left half. Therefore, when selecting these segments, the most significant bit is reversed so that the right half of the 1-7 segments falls on the right half of the tube. The intensifying circuitry at the same time illuminates only those messages falling in the selected segments, 5-11.

Fig. 4-30
Page 1660

7) Digit 0 Selection, X4 Expansion

a) When an X4 expansion is being displayed, expansion relay G is operated so that the bit which becomes digit 0 in the decoder can only come from the circuits associated with the L2 bit by passing through normally closed contact Fx-1 and normally open contact GX-1. Inspection of table 4-5 shows that there are seven areas along the x axis that can be selected and there are seven combinations of off-centering relays with which to obtain the selection.

b) As before, the message-positioning circuitry selects the desired display by intensification, thus allowing the positioning bits of all messages to get to the binary decoder but intensifying only those messages in the desired area. Therefore, in the X4 expansion, there are, in effect, four superimposed areas consisting of segments 1-3 expanded to cover the entire tube; segments 5-7 expanded in the same way, etc. Only messages in the selected segments are intensified. For purposes of message-positioning, there is still the problem of ensuring that the messages end up on the correct half of the tube. For instance, with segments 1-3, no sign bit reversal is necessary since messages in the left half of X1, segments 1-3, will fall on the left half of the X4 display. Messages on the right half of X1, segments 1-3, will fall on the right half of the X4 display. The same situation exists with selected segments 5-7, 9-11, or 13-15.

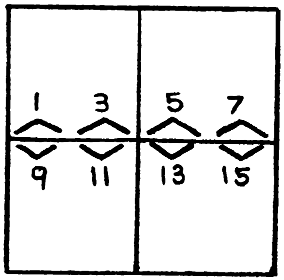

FIG 4-30

c) The selection of segments 3-5, 7-9, or 11-13, however, requires the sign bit reversal since, in each of these cases, the desired segments would be on the wrong side of the tube (as explained for the 5-11 selection of the X2 expansion). For instance, segment 3 falls on the right side of the tube as part of the display of segments 1-3. When segments 3-5 are to be selected, however, segment 3 must be on the left half of the tube.

8) Digit 0 Selection X8 Expansion

a) In an X8 expansion, relays F and G are operated so that digit 0 must come from the circuitry associated with the L3 positioning bit through normally open contacts of X-1 and Gx-1. Table 4-5 lists the segments which can be selected (in this case, any of the basic 15) and the relays which must operate. Since only D relay contacts of the off-centering relays are involved in the selection of the digit 0 bit, a quick generalization can be made. When the relay is not operated, the 0 side of the L3 bit is selected by the normally open contact of Dx-5. This is in agreement with what has been discussed previously since the D relay is operated only when selecting segments 2, 4, 6, 8, 10, 12

Table 4-5
Page 1520

and 14. These are the segments that make up half of each adjoining segment, as shown in Figure 4-25. The areas capable of being displayed simultaneously consist of segments 1, 3, 5, 7, 9, 11, 13, and 15. To select segment 2, for example, requires the right half of segment 1 and the left half of segment 3, both of which must be reversed to achieve a correctly oriented display of segment 2.

Fig. 4-25
Page 1380

9) Summary of Deflection Bit Wiring for all Scales

   a) X1 Scale

      1) Bits LS thru L9 used.

      2) LS-0 wired to XO, L1-1 wired to X1, etc. L9-1 wired to X9.

   b) X2 Scale.

      1) Bits L1 thru 10 used.

      2) If areas 1 thru 7 or 9 thru 15 are to be expanded.

         a) L1-1 wired to X0, L2-1 wired to X1, etc. L10-1 wired to X9.

      3) If overlap areas 5 thru 11 is to be expanded.

         a) L1-0 wired to XO, L2-1 wired to X1, etc. L10-1 wired to X9.

   c) X4 Scale

      1) Bits L2 thru L11 used.

      2) If areas 1 thru 3, 5 thru 7, 9 thru 11, 13 thru 15 are to be expanded:

         a) L2-1 wired to XO, L3-1 wired to X1, etc. L11-1 wired to X9.

d) X8 Scale

  1) Bits L3 thru L12 used.

  2) If areas 1, 3, 5, 7, 9, 11, 13, or 15 are to be expanded

    a) L3-1 wired to XO, L4-1 wired to X1, etc. L12-1 wired to X9.

  3) If overlap areas 2,4,8,10, 12 or 14 are to be expanded:

    a) L3-0 wired to XO, L4-1 wired to X1, etc. L12-1 wired to X9.

e) Wiring of deflection bit lines to decoder determined by expansion and off-centering relays.

  1) Various combinations used depending on scale and areas selected.

f) The same wiring methods apply to the "Y" decoders using RS thru R12.

10) Intensification Selection

a) The process of producing an expanded display in the SD console involves the selection of 10 positioning bits for all messages received at the console. In addition, only those messages in the selected areas must be intensified, since, regardless of area selection, all messages are presented to the SD CRT circuitry. The remainder of the circuits (fig. 4-29) are used for this purpose.

Note: Fig. 4-29
Page 1600

b) As explained, to achieve intensification of any message, AND 5 in intensification unit 2 must be conditioned by three gates (fig. 4-21), one of which is the intensify gate. Assuming then that an intensify gate is present, signifying that a message or part of a message is ready for display, it falls to the expansion and off centering relays to decide whether the message qualifies for display by determining whether it is in the area being viewed. If the message is in the correct area, gates will appear on the two other inputs to AND, signifying that the position of the message in both x and y co-ordinates is satisfactory and the message is intensified. In order to provide these two additional inputs to AND 5, OR circuits 1 and 2 must be conditioned, either by 10V which is fed to both OR's or by AND's 1, 2, 3, and 4, as shown in the illustration. The four bits necessary to condition each of these four AND circuits are selected by the contacts of the expansion and off-centering relays. Only the X-contacts will be discussed since operation of both sets is identical.

Refer: Fig. 4-21
Page 0850

c) Intensification of X1 Displays

(1) Reference to Figure 4-29 shows that ≠10V is applied to the normally open contact on Ex-11. The normally closed contact of Ex-11 is connected to /-30V. The armature is connected or OR circuits 1 and 2. Therefore, whenever there is an X1 display, relay E will operate, and a conditioning voltage is applied to both the X and Y OR circuits so that all messages will be intensified. This is necessary, of course, since there is no selection of area in the X1 display.

The L2 bit is a 1 and, as the third most significant bit, is weighted in the binary decoder to produce deflection across 1/8 of the tube face. The message is thus positioned 1/4 of the way across the left half of the tube on the X axis. This is point D of figure 4-22.

Note: Fig. 4-22
Page 1260

(2) If this message is to be seen on an X2 expanded display, segments 1-7 must be selected. Relays C and D are operated to obtain this off-centering selection, and, therefore, the 1 side of the L1 bit will go out as the digit 0 bit to the binary decoder.

(3) Line 1 to AND 1 is connected to the 1 side of the LS bit through the normally closed Ax-1 contact. Since the LS bit is a 1, this line will be up; that is, at +10V. (Note that, although a different set of 10 bits is used for each expansion level, the unused and more significant bits are not discarded; they are still used for intensification purposes.) Line 2 of AND 1 is connected to the L1 circuitry and goes to the 0 side since relay B is not operated. Since L1 is a 0, this line will contain a 1, and, hence, line 2 will also be up. Line 3 of AND 1 goes to both the circuitry associated with the L2 bit and to a source of +10V through the normally closed contact of Gx-11; hence, this line is also up. Similarly, line 4 not only goes to the circuits of L3 but also goes to +10V through the normally closed contact of Fx-11. Thus, all four lines are up and AND 1 is conditioned, thus conditioning OR 1 and AND 5 and allowing display of the message.

(4) Tables 4-6, 4-7, and 4-8 summarize the conditions under which each of the lines going to AND circuits 1 and 2 is energized. Each table covers a different expansion level.

Note: Table 4-6, 4-7
Table 4-8
Page 1710 & 1720

TABLE 4–6. CONDITIONS FOR INTENSIFICATION, X2 EXPANSION

AND 1

	1–7	5–11	9–15
Line 1	LS=1	LS=1	LS=0
Line 2	L1=0	L1=1	L1=0
Line 3	+10v	+10v	+10v
Line 4	+10v	+10v	+10v

AND 2

Line 1	LS=1	LS=0	LS=0
Line 2	L1=1	L1=0	L1=1
Line 3	+10v	+10v	+10v
Line 4	+10v	+10v	+10v

TABLE 4–7. CONDITIONS FOR INTENSIFICATION, X4 EXPANSION

AND 1

	1–3	3–5	5–7	7–9	9–11	11–13	13–15
Line 1	LS=1	LS=1	LS=1	LS=1	LS=0	LS=0	LS=0
Line 2	L1=0	L1=0	L1=1	L1=1	L1=0	L1=0	L1=1
Line 3	L2=0	L2=1	L2=0	L2=1	L2=0	L2=1	L2=0
Line 4	+10v	+10v	+10v	+10v	+10v	+10v	+10v

AND 2

Line 1	LS=1	LS=1	LS=1	LS=0	LS=0	LS=0	LS=0
Line 2	L1=0	L1=2	L1=1	L1=0	L1=0	L1=1	L1=1
Line 3	L2=1	L2=0	L2=1	L2=0	L2=1	L2=0	L2=1
Line 4	+10v	+10v	+10v	+10v	+10v	+10v	+10v

TABLE 4–8. CONDITIONS FOR INTENSIFICATION, X8 EXPANSION

AND 1

	1	2	3	4	5	6	7	8	9	10	11	12	13	14	15
Line 1	LS=1	LS=1	LS=1	LS=1	LS=1	LS=1	LS=1	LS=1	LS=0	LS=0	LS=0	LS=0	LS=0	LS=0	LS=0
Line 2	L1=0	L1=0	L1=0	L1=0	L1=1	L1=1	L1=1	L1=1	L1=0	L1=0	L1=0	L1=0	L1=1	L1=1	L1=1
Line 3	L2=0	L2=0	L2=1	L2=1	L2=0	L2=0	L2=1	L2=1	L2=0	L2=0	L2=1	L2=1	L2=0	L2=0	L2=1
Line 4	L3=0	1	0	1	0	1	0	1	0	1	0	1	0	1	0

AND 2

Line 1	LS=1	1	1	1	1	1	1	0	0	0	0	0	0	0	0
Line 2	L1=0	0	0	1	1	1	1	0	0	0	0	1	1	1	1
Line 3	L2=0	1	1	0	0	1	1	0	0	1	1	0	0	1	1
Line 4	L3=1	0	1	0	1	0	1	0	1	0	1	0	1	0	1

Reference to table 4-6 reveals all the conditions which must be met by the positioning bits of an incoming message in order for the message to be intensified on the SD CRT during an X2 expansion. For instance, if segments 1-7 are being observed (having been selected by the OFF-CENTERING buttons or the plugboard patching), there are two combinations of the LS and L1 bits that will produce intensification of the message. If both bits are 1, AND 2 will be energized. This follows from the fact that a 1 bit for LS selects the left half of the X1 display and a 1 bit for L1 selects the right half of the left half, or the second quarter of the axis which corresponds to the 5-7 segments, and which, therefore, merits display. If the LS bit is 1 and the L1 bit is 0, the message will appear to the left of the tube, an area that corresponds to segments 1-3 of an X1 display.

(5) If L1 is 0, intensification will still be achieved (through AND 1), because, once the LS bit has selected the left half of the X1 display, either condition of the L1 bit will still result in message positioning in the area covered by the 1-7 segments.

(6) Notice that table 4-6 lists bit combinations for the 5-11 column that are duplicated in the other two columns. This follows from the fact that the areas covered by the different groups of segments overlap and that a message occurring in the overlapping areas will be intensified if either of the two groups of segments has been selected for expanded viewing.

When relay E is not operated (X2, X4, and X8 expansions), -30V is applied to both OR circuits.

d) Intensification of X2, X4, and X8 Displays

(1) In order to illuminate messages for an X2 display, either AND 1 or AND 2 must be completely conditioned (for the x co-ordinate) so that OR 1 will condition AND 5 in intensification unit 2.

(2) Each of the four inputs to AND 1 comes from the relay contact circuitry associated with each of the first positioning bits. By analyzing each of the three possible conditions of relay operation in an X2 expansion, it can be seen how conditioning of one of the AND circuits is obtained for messages that fall in the correct areas.

(3) Assume, for instance, that a message having a binary address shown below arrives at the console circuitry.

LS	L1	L2	L3	L4	L5	L6	L7	L8	L9
1	0	1	0	0	0	0	0	0	0

(4) There will be three additional bits (L10-L12) in the address, but they will not be discussed, as yet, since they do not play a part in the deflection or intensification.

(5) Consider first where this message would occur on the X1 display. Since the sign bit (LS) is a 1, the message must appear on the left-hand side of the SD CRT. The L1 bit is a 0 and, hence, does not produce deflection to the right.

(6) In a like manner, tables 4-7 and 4-8 list all the conditions that must be met for message intensification in the X4 and X8 levels of expansion.

e) Summary of Intensity Control

(1) Intensification control established by address limits of area or areas selected.

(2) "X1" Scale

(a) LS and L1 plus RS and R1 used to control intensification.

(4) "X4" Scale

(a) LS, L1, and L2, plus RS, R1, and R2 used to control intensification.

(5) "X8" Scale

(a) LS, L1, L2, and L3 plus RS, R2, and R3 used to control intensification.

(6) Wiring of control bits controlled by off-centering relays Ax, Bx, Cx, Dx and Ay, By, Cy, and Dy.

11) Trouble Diagnosis using SD Overall Test Pattern

Note: Use fee 1164 or Fig on Page 1310 or Writeup on SD Overall

a) Displayed Pattern seen on "X1" Scale

- (1) Numbers displayed as shown, except no lines are present.
- (2) "Dot" symbol displayed with each number.
- (3) Used to check out proper wiring and relay operation at each console.
- (4) By selecting various scales and areas, certain numbers should be displayed.
- (5) X1 Scale
    - (a) All numbers should be displayed
- (6) X2 Scale
    - (a) Areas 1 thru 7 (X and Y)
        - (1) Numbers 129 thru 136, 145 thru 152, 152, 161 thru 168, etc. thru 248 displayed expanded.
    - (b) Areas 5 thru 11 (X and Y)
        - (1) Numbers 69 thru 76, 85 thru 92, 101 thru 108, etc. thru 188 displayed expanded.
    - (c) Areas 9 thru 15 (X and Y)
        - (1) Numbers 009 thru 016, 025 thru 032, 041 thru 048, etc. thru 128 displayed expanded.
- (7) X4 Scale
    - (a) Areas 1 thru 3 (X and Y)

(1) Numbers 193 thru 196, 209 thru 212, 225 thru 228, 241 thru 244 should be displayed expanded.

(b) Areas X - 9 thru 11, Y = 13 thru 15

(1) Numbers 9 thru 12, 25 thru 28, 41 thru 44, 57 thru 60 should be displayed expanded.

(8) X8 Scale

(a) Area 1 (X and Y)

(1) Numbers 225, 226, 241, 242 should be displayed expanded.

(b) Area X = 13, Y = 15

(1) Numbers 013, 014, 029 and 030 should be displayed expanded.

b) Console check out

(1) All scales and areas are selected at console using plugboard or switches.

(2) Chart available indicating what numbers should be displayed with each selection. (Chart contained in Logic Index available in field.)

c) Trouble Diagnosis

(1) Assume selection - contracted X1, normal X2 (X - 1 thru 7, Y = 9 thru 15) expanded X8.

(a) Contracted display is correct.

(b) Normal display

(1) Instead of seeing correct display, the following display is seen:

129	130	131	132	133	134	135	136
145	146	147	148	149	150	151	152
161	162	163	164	165	166	167	168
177	178	179	180	181	182	183	184
193	194	195	196	197	198	199	200
209	210	211	212	213	214	215	216
225	226	227	228	229	230	231	232
241	242	243	244	245	246	247	248

(c) Diagnosis

(1) Desired selection (X = 1 thru 7, Y = 9 thru 15)

(2) Displayed selection (X = 1 thru 7, Y = 1 thru 7)

(3) Relays that should be energized. Desired selection (X = Cx, Dx, Y = Ay, Cy, Dy)

(4) Possible troubles - Ay not energized, RS-1 and RS-0 inputs at Ay reversed.

(2) Assume same conditions as stated in item (1).

(a) Contracted display is correct
Normal display is correct
The following display is seen on expanded

Fig. 1 Fig. 2 Fig. 3

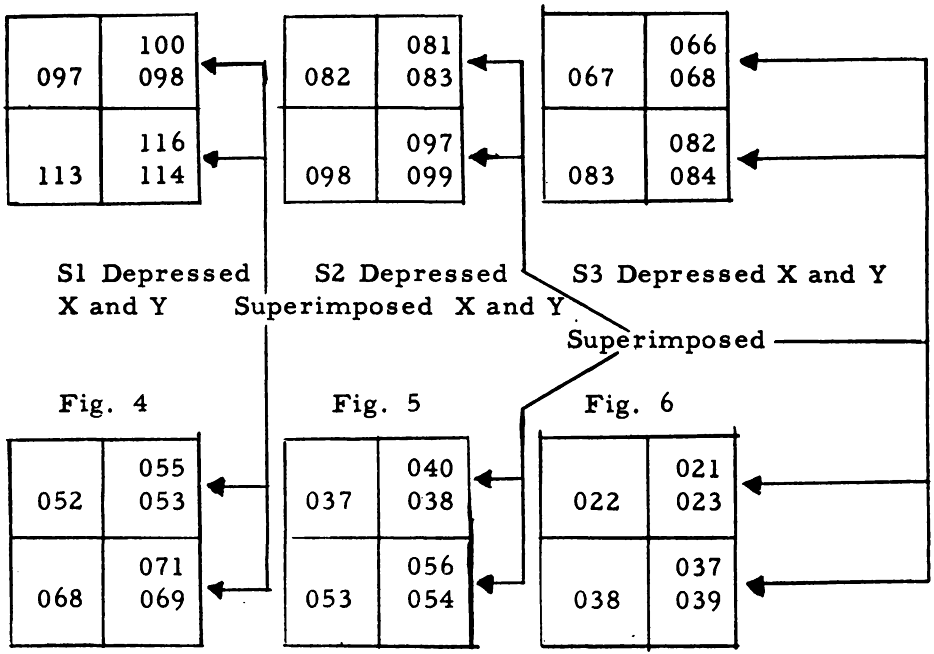

S1 Depressed X and Y

S2 Depressed Superimposed X and Y

S3 Depressed X and Y

Superimposed

Fig. 4 Fig. 5 Fig. 6

S4 Depressed X and Y

S5 Depressed X and Y

S6 Depressed X and Y

Fig. 7

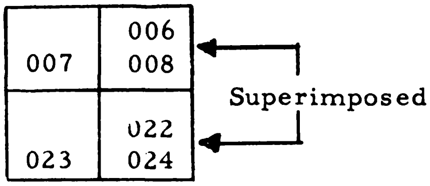

S7 Depressed X and Y

(b) Diagnosis

Fig. 1 should be 097, 098, 213, 214
Fig. 2 should be 082, 083, 098, 099
Fig. 3 should be 067, 068, 083, 084
Fig. 4 should be 052, 053, 068, 069
Fig. 5 should be 037, 038, 053, 054
Fig. 6 should be 022, 023, 038, 039
Fig. 7 should be 007, 008, 023, 024
Observing Fig. 1

(1) Undesired numbers are located in same horizontal line as seen in "X1" display.

(2) Numbers are being displayed in correct positions.

(3) Trouble appears to lie in Horizontal Intensity Control Circuit.

(4) Address limits should be 1. 000 thru 1. 177.

(5) Appears to be 1. 000 thru 1. 377.

(6) L2 Bit seems to have no control of intensification.

(7) Absence of control by L2 appears to be in High Address limit control.

(8) Observing remaining figures confirms diagnosis.

(9) Refer to Fig. 4-29, Page 1600 "AND" 2 controls high address limit L2 input (Input 3) probably floating. (Scope measurement could confirm this.) Correct control by L3 bits indicates correct energizing of F and G relays. Probable trouble is open between K60 A3 and K54 C6.

12) Summary Questions

a) Assume a message contains a deflection address of X - 1.506, Y - 1.330. What is the Drum Message address to the input of the decoder and what block will it fall in according to FEE 1164 or fig. on page .

(1) XI scale

(2) X2 scale with areas 1 thru 7 selected for both X and Y.

(3) X2 scale with areas 5 thru 11 selected for X and areas 1 thru 7 for Y.

(4) X4 scale with areas 5 thru 7 selected for X and areas 1 thru 3 for Y.

(5) X4 scale with areas 3 thru 5 selected for X and areas 3 thru 5 for Y.

(6) X8 scale with area 5 selected for X and area 3 for Y.

(7) X8 scale with area 6 selected for X and area 4 for Y.

b) How many scales are there and how many different areas or groups of areas can be selected with each scale?

c) What do the Expansion Relays control? (What bits will be fed to decoder).

d) What do the Off-centering Relays control? (How bits will be fed to decoder and control intensification).

e) When is the L12 Bit fed to the "X" Decoder? (X8 Scale)

f) On the X4 Scale, what bit is controlling the high order stage of the decoder? (L2 and R2)

g) What controls the Expansion and Off-Centering relays? (Expansion Switch and Off-Centering pushbutton).

h) A track message contains an X coordinate of 0.3000 and Y coordinate of 1.70000. On the X1 scale this message will appear in:

A. Quadrant I
B. Quadrant II
C. Quadrant III
D. Quadrant IV
E. None of the above

i) A console is wired so that contracted is X1 scale, normal is X2 scale. With areas X = 5-11, Y = 9-15 wired in plugboard and expanded equals X8 scale what will be displayed if relay bx will not energize?

A. On contracted, X area 5-11 will not be displayed.
B. On expanded, X off-centering pushbuttons will display X areas 5, 6, 7, 8, 13, 14, and 15.
C. On expanded, X off-centering pushbuttons will display X areas 1, 2, 3, 4, 9, 10, and 11.
D. On normal, X areas 9-15 are displayed.
E. Only X area 5 will be displayed on all positions of the expansion switch.

Answers to Summary Questions

a)	1.	X = 1.506	Y = 1.330	Block 198
	2.	X = 0.214	Y = 1.660	Block 155
	3.	X = 1.214	Y = 1.660	Block 147
	4.	X = 1.430	Y = 0.540	Block 037
	5.	X = 0.430	Y = 1.540	Block 173
	6.	X = 0.060	Y = 0.300	Block 073
	7.	X = 1.060	Y = 1.300	Block 193

b) 4, X1 - 1 Area
X2 - 9 Areas
X4 - 49 Areas
X8 - 225 Areas

c) The deflection bits that will be fed to the decoder.

d) Which deflection bit is fed to the most significant decoder stage and they control intensification.

e. X8 Scale

f. Left 2 and Right 2

g. Expansion Switch and Off-Centering Pushbuttons

h. D

i. C

17. SD Console Subpanel Controls

a. Figure 4-31 shows an SD indicator subpanel and the adjustment controls located on it. Those which are used in the SDIS are colored green and are indicated on the illustration by shading. Those which are used for the light gun and which are part of the audible alarm are colored black and are indicated by pairs of diagonal lines. The DD controls are red (diagonal dashed lines on the illustration) and are discussed in DDIE.

Fig. 4-31 Page 1840

The camera control section is shown drawn to the left of the DDIE controls. Situation display consoles that have cameras attached do not contain a DDIS; this section replaces the DDIS controls. Camera console will be discussed later.

b. Situation Display Controls

1) The following SD controls are on the subpanel of the console. They are listed from left to right and from top to bottom:

a) SD Test Pattern. This 3-position switch allows normal console operation in the NORMAL position. When in either TEST position, only the test category is displayed while all other categories are disconnected. In addition, the times 1 expansion is selected for display. When in TEST 1 position, the feature selection switches in group 1 are operative; when in TEST 2 position, the feature selection switches in group 2 are operative.

b) Driver Filament Voltage-Switch. This switch reduces the filament voltage applied to all

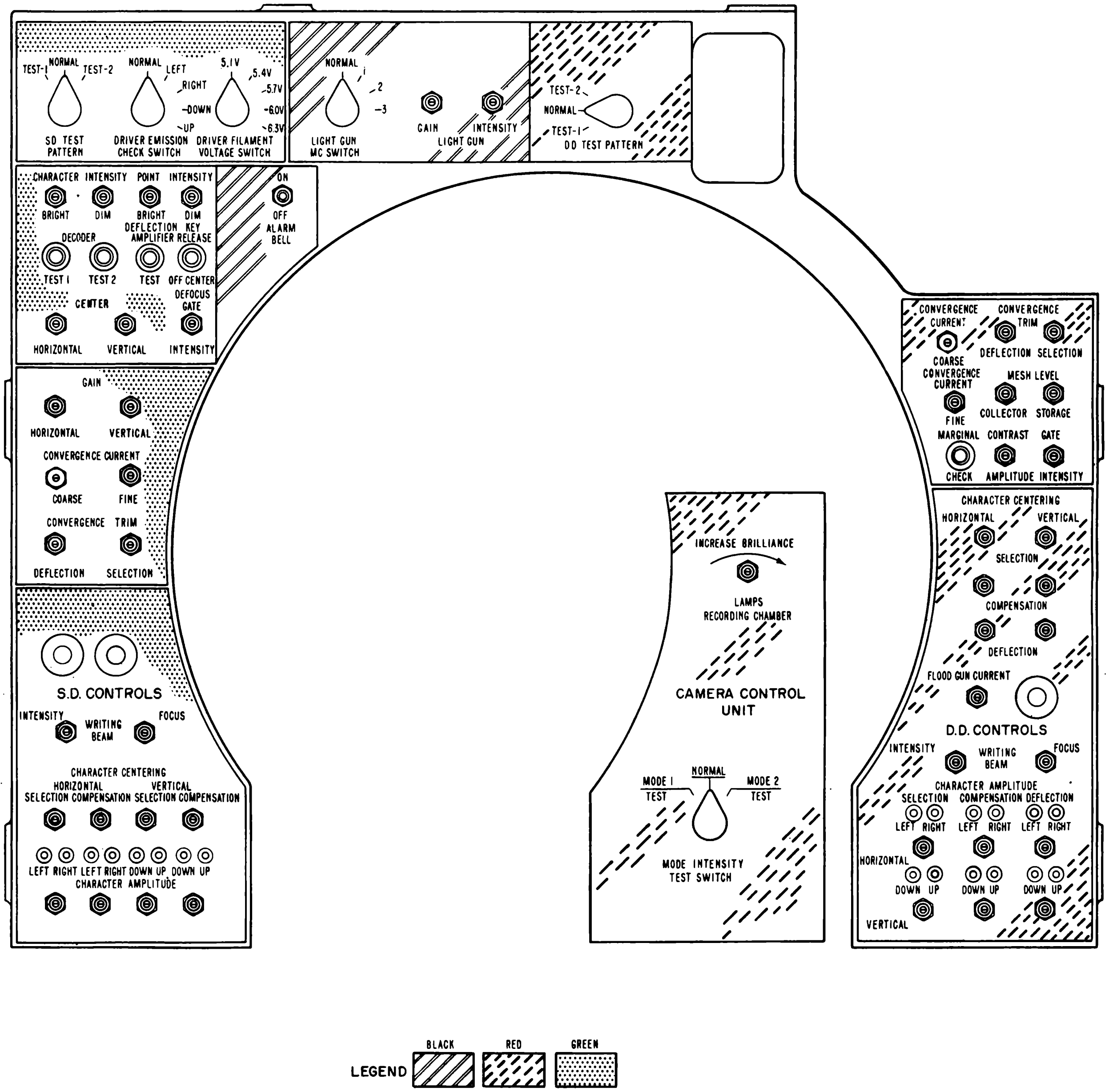

Figure 4–31. Situation Display Console Subpanel

four driver unit tubes, allowing a stringent test for low-emission tubes.

c) Bright and Dim Character Intensity. These controls vary the intensity of bright characters and dim characters, respectively.

d) Bright and Dim Point Intensity. These controls adjust the intensification levels for Bright and Dim Points.

e) Off Center Key Release. If the off-centering keys on the front panel are all accidentally depressed, this switch will energize a solenoid which will release them.

f) Horizontal-Vertical Centering. These controls adjust the horizontal and vertical centering of the yoke deflection system.

g) Defocus Gate Intensity. This control adjusts the evenness of illumination of bright characters during adjustments using a test pattern.

h) Horizontal-Vertical Gain. These controls vary the width and height of the display area on the SD CRT to fit within the inscribed square on the face of the tube by varying the gain of the deflection amplifier unit.

i) Coarse-Fine Convergence Current. These controls are adjusted for sharpest character registration as viewed on the SD CRT.

j) Convergence Deflection and Trim Selection. These controls provide find adjustments for character registration and character format. They are used in conjunction with the CHARACTER COMPENSATION and SELECTION controls respectively.

k) Writing Beam Intensity. This Control adjusts the overall brightness of the SD display.

l) Writing Beam Focus. This control adjusts the size of a point display. The adjustment is made by reducing a bright point to optimum size.

m) Horizontal and Vertical Character Compensation Centering. These controls adjust horizontal and vertical character registration. They are adjusted while viewing a test pattern to reduce the variation in position of different characters displayed sequentially in the same location.

n) Horizontal and Vertical Character Selection Centering. These controls adjust for proper selection of columns and rows of characters on the character-forming matrix so that the defocused writing beam is centered on the selected character aperture.

o) Horizontal and Vertical Character Compensation Amplitude. These controls help adjust for the best format registration of characters. They control the amplitude of correction signals applied to compensate for the beam deflection introduced by character selection.

p) Horizontal and Vertical Character Selection Amplitude. These controls also adjust the best format registration of characters by controlling the amplitude of the character selection signals applied to the selection plates of the SD CRT.

c. Light Gun Controls

1) The following controls on the subpanel of the console are used in conjunction with the light gun. The light gun theory is discussed later on in lesson plan.

Certain portions of light gun theory is omitted because of its classification.

a) Light Gun MC Switch. This 4-position rotary switch allows normal light gun operation when in NORMAL. Position 1 is used for testing the thyratron within the light gun, position 2 is used for testing the light gun amplifier, and position 3 is used when adjusting the LIGHT GUN GAIN.

b) Light Gun Gain. This control adjusts the level of the input signals to the light gun amplifier.

c) Light Gun Intensity. This control varies the intensity of the red light within the light gun proper.

d. Alarm Bell Control

1) This control is used to quiet the bell section of the audible alarm for maintenance or similar purposes.

Theory will be discussed later in lesson plan.

e. Marginal Check Push Button

Display Maintenance Handbook 07

1) This push button lowers the filament voltage on all tubes in the SD console except for the Deflection Driver tubes and CRTS' filaments. The Display Maintenance Handbook has a procedure outlined including failure indications, probable pluggable unit and circuit involved while observing the SD overall maintenance program and depressing the M. C. Push Button.

18. SDIE Maintenance

Display Maintenance Handbook 07

a. The maintenance procedures outlines in the Display Maintenance Handbook 07, discuss in detail, the proper method for console alignment and maintenance procedures. Maintenance procedures are not covered in this lesson plan, however, they will be covered in laboratory session on SDIE.

V. Light Guns

A. Due to classification, only that portion of Light Gun Theory involved with the SD Console will be discussed at this time.

B. Light Gun, Model B

1. The model B light gun (bLG), a nonlogic circuit, is a photoelectric device which is employed to generate a pulse proportional to the light received from a bright point or character on the face of the SD CRT. The logic block symbol for the bLG is shown in Figure 3-109.

Figure 3-109,
Figure 3-110,
Table 3-55
Page 1890

2. Basic Operation

a. Figure 3-110 is the schematic diagram for the bLG. Table 3-55 lists the associated detail parts. The photomultiplier produces electron flow proportional to the incident light falling on its photosensitive cathode. Six dynodes in the photomultiplier are coated with an electron emissive substance. Each dynode emits approximately four times the number of electrons that strike it, effecting a current multiplication from cathode to anode of approximately 3,000. A pulse is developed in the plate circuit of V1 and applied to the cathode follower.

3. Detailed Operation

a. A -12,00V potential is applied to the cathode of V1. Potentials approaching ground, in successive steps, are applied to the dynodes of V1. The resulting electron multiplication between the cathode and the plate, develops a negative pulse across plate load resistor R4. The magnitude of this pulse is a function of the light striking the photosensitive cathode of V1. This voltage is coupled directly to the grid of V2. The cathode of V2 follows the grid swing and the resulting negative pulse is fed to the light gun amplifier from the moving arm of potentiometer R5. The amplitude of the output is adjusted by means of R5 (Light Gun Gain Control).

Figure 3—109. Light Gun, Model B, Logic Block Symbol

TABLE 3—55. LIGHT GUN, MODEL B, FUNCTION OF DETAIL PARTS

REFERENCE SYMBOL	FUNCTION
R1, R2, R3	Form voltage divider network
R4	Plate load resistor for V1 and d-c grid return for V2
R5	Output amplitude control
V1	Photomultiplier tube
V2	Cathode follower triode

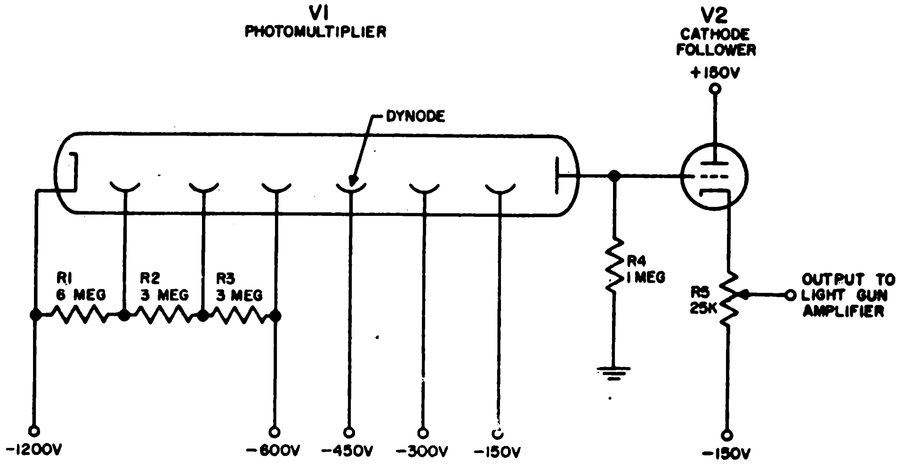

Figure 3—110. Light Gun, Model B, Schematic Diagram

C. Light Gun Amplifier, Model B

1. The model B light gun amplifier (bLGA) is a nonlogic circuit which amplifies the output pulse of the light gun. The logic block symbol for the bLGA is shown in Figure 3-111. The bLGA consists of an amplifier, a 3-way AND circuit, and a pulse generator. For purposes of simplification, the operation of the amplifier section and pulse generator section are described separately.

Fig. 3-111,
Fig. 3-112,
Table 3-56
Page 1910

2. Amplifier Section

   a. The schematic diagram of the amplifier section of the bLGA is shown in Figure 3-112. Table 3-56 lists the associated detail parts and their functions.

   b. The negative pulse from the light gun is coupled through capacitor C1 to the grid of V1. The pulse may range in amplitude from 3 to 10V with a duration of 25 to 60 usec. V1 is normally conducting. The negative-going input pulse reduces the plate current, producing a rise in the plate voltage of V1. The positive-going output pulse is coupled from the plate V1 through C2 to the control grid of V2.

   c. As a result of the bias (-10.7V) developed across resistor R5, V2 is normally cut off. The positive pulse of the grid of V2 overcomes this bias and V2 conducts. Consequently, the plate voltage of V2 drops, developing a negative-going output pulse. This pulse is coupled through C4 to normally conducting V3, a positive pulse, is coupled through capacitor C6 to the input circuit of the light gun pulse generator.

3. Pulse Generator Section, Basic Operation

   a. The pulse generator section of the bLGA is a logic circuit that develops a 10-usec pulse.

TABLE 3–56. LIGHT GUN AMPLIFIER, MODEL B, AMPLIFIER SECTION, FUNCTION OF DETAIL PARTS

REFERENCE SYMBOL	FUNCTION
C1	Input coupling capacitor
C2	Coupling capacitor
C3	Bypass capacitor
C4	Coupling capacitor
C5	Part of low pass filter (with R19)
C6	Output coupling capacitor
R1	Grid return for V1
R2	Plate load resistor for V1
R3	Grid return for V2
R4, R5	Voltage divider
R6	Grid current-limiting resistor for V2
R7	Plate load resistor for V2
R8	Grid-return resistor for V3
R9	Part of low pass filter (with C5)
R10	Plate load resistor for V3

Figure 3–111 Light Gun, Amplifier, Model B, Logic Block Diagram

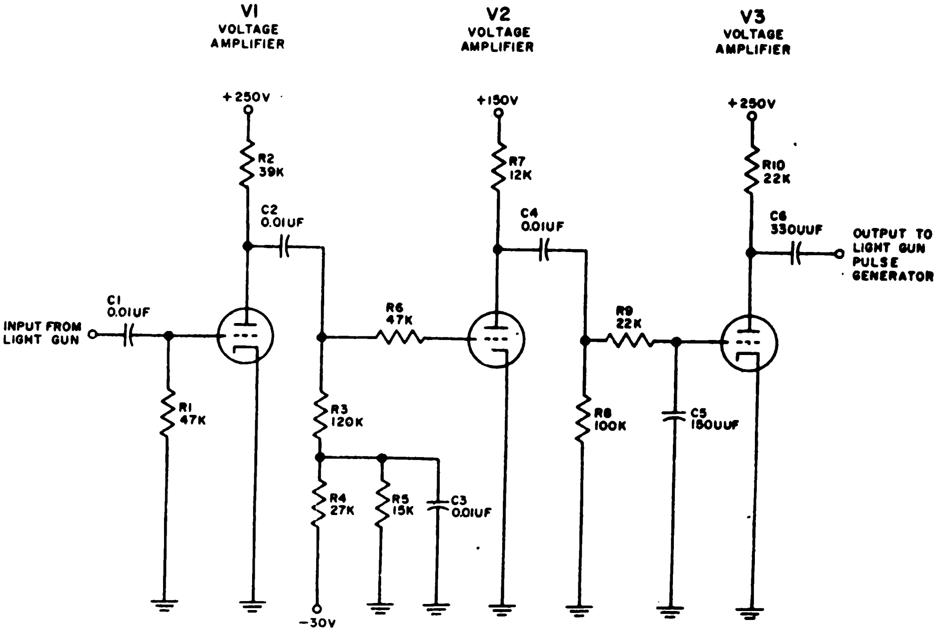

Figure 3–112. Light Gun Amplifier, Model B, Amplifier Section, Schematic Diagram

TABLE 3–57. LIGHT GUN AMPLIFIER, MODEL B, PULSE GENERATOR SECTION, FUNCTION OF DETAIL PARTS

REFERENCE SYMBOL	FUNCTION
C1	Coupling capacitor
C2	Improves response of relay K1
C3	High-frequency bypass for V1 grid
C4	High-frequency bypass for V1 screen grid
C5, C6, C7	Part of 14 section delay line (with L2 and L3)
CR1	Positive clamp for input from light gun amplifier
CR2, CR3, CR4	Part of 3-way AND circuit (with R2)
CR5	—30V clamp for AND output
K1	Relay, operates indicator and aim lights
L1	Eliminates spike on leading edge of plate pulse
L2, L3	Part of 14 section delay line (with C5, C6, and C7)
R1	Current-limiting resistor
R2	Part of 3-way AND circuit (with CR2, CR3, and CR4)
R3	Part of voltage divider (with R6)
R4	Grid return for V1
R5	Grid current-limiting resistor for V1
R6	Part of voltage divider (with R3)
R7	Current-limiting resistor for V1
R8	Parallel damping resistor for K1
R9	Cathode load for V1
R10	Screen grid current-limiting resistor
R11	Isolating resistor
S1	Light gun trigger switch

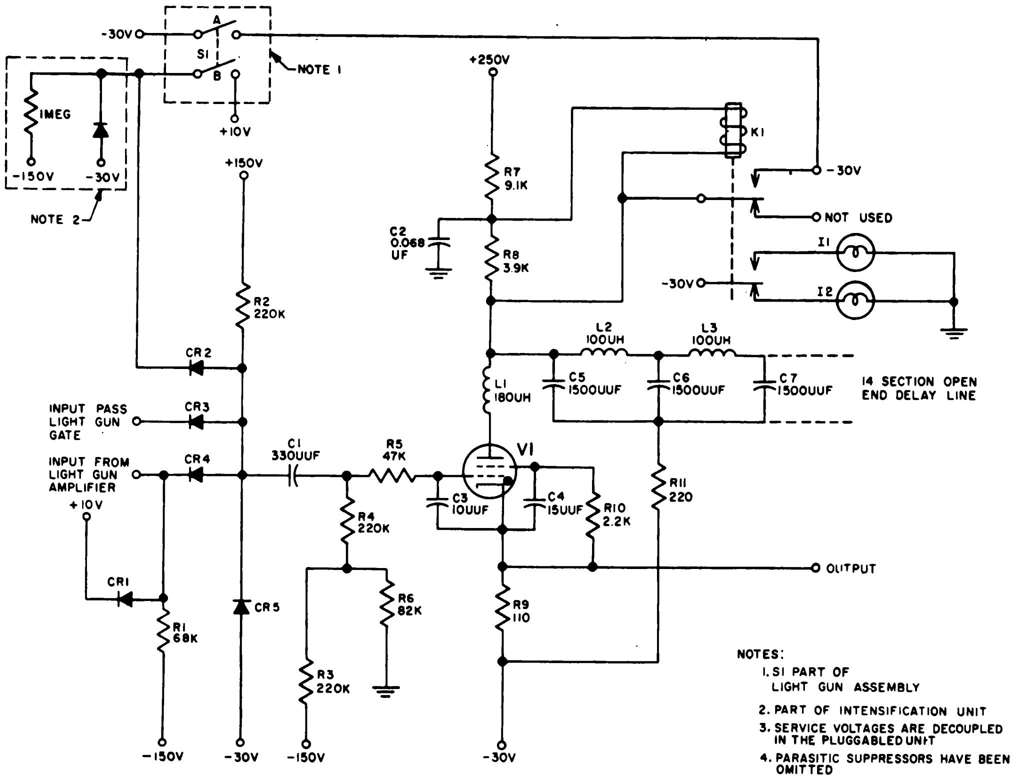

Figure 3–113. Light Gun Amplifier, Model B, Pulse Generator Section, Schematic Diagram

The circuit generates an output when a preceding 3-way AND circuit is conditioned by the coincidence of a positive level, positive gate, and positive pulse. Figure 3-113 is the schematic diagram for the light gun pulse generator. Table 3-57 lists the associated detail parts and their functions.

Fig. 3-113
Table 3-57
Page 1920

b. The positive output from the 3-way AND input circuit triggers thyratron V1. When this thyratron conducts, its cathode potential increases. With V1 conducting, the delay line consisting of C12, C13, C14, L2, and L3, which was charged to /250V, discharges. A 1-usec positive pulse is developed at the output of the pulse generator.

4. Pulse Generator Section, Detailed Operation

a. The positive output from the amplifier is clamped at /10V by crystal diode CR1. This is one of three inputs to the AND circuit consisting of crystal diodes CR2, CR3, CR4, and resistor R5. The other inputs to the AND include a /10V level, applied when the light gun trigger S1 is depressed, and the pass light gate. In the absence of any of these inputs, the output of the AND is clamped at -30V by CR5. When the AND circuit is conditioned by these three inputs, the positive pulse is coupled through capacitor C5 to the control grid of normally nonconducting thyratron V1.

b. Due to the voltage divider comprised of R7 and R11, the control grid of V1 is at -41V. Since the cathode of V1 is tied to -30V, the resulting bias (-11V) is sufficient to hold the grid of V1 below igniting potential. The positive pulse input to the control grid overcomes this bias, firing the thyratron. The plate voltage decreases, causing the delay line, which was charged to /250V, to discharge (this delay line will discharge in 10-usec). Relay K1 is energized when V1 is fired. When K1 is energized, the n/o contacts of (K1) will apply -30 volts to plate of V1 causing V1 to extinguish. Indicator I1 is lit and aim light I2 is extinguished, indicating that the thyratron has fired and a 10-usec positioning pulse has been developed. The n/o contacts also apply -30V to one side of the relay coil to maintain K1 in the energized state. The delay line and the plate of V1 are held at -30V as long as S1 is depressed and K1 is energized. Releasing switch S1 de-energizes the relay. This extinguishes I1 and causes the aim light, I2, to glow.

D. Light Gun Amplifier Adjustment and Test

All control located on SD sub panel

1. Light Gun Gain Control

    a. Adjusts amplitude of signal into Light Gun Amplifier.

    b. Adjusted for correct operation of Light Gun under normal operating conditions.

2. Light Gun Marginal Check (4 Position)

    a. Normal Position

        1. Inputs and outputs connected as shown.

    b. Marginal Check Position 1

        1. Output signal disconnected. Pass Light Gun Signal disconnected. Output of V3 connected to grid of V3. Input to L.G. Amplifier disconnected. Resultant action - Indicator light should remain lit continuously.

    c. Marginal Check Position 2

        1. Input to L.G. Amplifier disconnected. Output from L.G. Amplifier disconnected. Pass L.G. line tied to ≠10 volts.

        2. Resultant action - Indicator light should light whenever trigger is depressed. When trigger is released, indicator light should go out - aiming light should light.

    d. Marginal Check Position 3

        1. Output from Light Gun connected to L.G. Amp.

2. Output from L. G. Amp. disconnected. Pass L. G. line tied to ≠10 volts. Resultant action - Light Gun Thyratron can be fired on any target. Gain adjusted in this position.

VI. Area Discriminator

A. General Information

1. Area Discriminator Consoles - Simplex, two consoles one used.

2. Operation

   1. Regular SD Console

      a. SD Tube has P11 phosphor and white implosion shield.

      b. Photo-pick-up unit mounted above SD tube.

      c. Basic Operation - views entire SD tube Activated by targets in unmasked areas.

B. Circuits Operation

1. The model B area discriminator (bAD), a nonlogic circuit, is a photoelectric device employed to generate a pulse whose voltage is proportional to the light intensity falling on its photosensitive element. The output represents a timing index associated with the data displayed on the unmasked areas of the situation display cathoderay tube (SD CRT). The logic block symbol for the bAD is shown in figure 3-7.

fig. 3-7, fig. 3-8,
table 3-4
Page 1970

2. Principles of Operation

   a. Figure 3-8 is the schematic diagram for the bAD. Table 3-4 lists the associated detail parts and their functions. The circuit consists of a photomultiplier tube, an optical system, and the associated circuits.

   b. The cathode potential of V1 (photomultiplier) is -12,00V, by successive steps, potentials approaching the plate voltage (+600V) are applied to the dynodes of V1. Some dynodes are connected to fixed voltage terminals whereas others are supplied from voltage dividers. With the cathode operating at -12,00V and the place at 600V, an 1,800 accelerating potential is achieved while still maintaining a degree of safety precaution (maximum voltage to ground is 1,200V).

TABLE 3—5. AREA DISCRIMINATOR AMPLIFIER, MODEL A, FUNCTION OF DETAIL PARTS

REFERENCE SYMBOL	FUNCTION
R1	V1 grid return
R2	Plate load for V1
R3	Grid return for V2
R4, R5	Form voltage divider
R6	Grid limiting for V1
R7	Plate load resistor for V2
R8	Grid return for V3
R9	Plate load resistor for V3
R10	Grid return for V4
R11	Cathode load resistor for V4
R12	Grid return for paralleled cathode followers
R13	Cathode load resistor for paralleled cathode followers
C1	Coupling capacitor
C2	Bypass capacitor
C3-C5	Coupling capacitors
CR1, CR2	Crystal diode, clamp
CR3	Crystal diode, clamps grids of paralleled cathode followers at +10V
CR4	Crystal diode, clamps grids of paralleled cathode followers at —30V

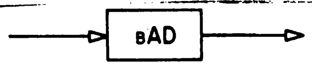

Figure 3—7. Area Discriminator, Model B, Logic Block Symbol

TABLE 3—4. AREA DISCRIMINATOR, MODEL B, FUNCTION OF DETAIL PARTS

REFERENCE SYMBOL	FUNCTION
C1-C5	Form capacitor network which prevents voltage fluctuations caused by transients
C6	Output coupling capacitor
C7	Bypass capacitor
R1, R2, R3	Form voltage divider
R4, R5, R6, R7	Form voltage divider
R8	Plate load resistor for V1 and output amplitude control.

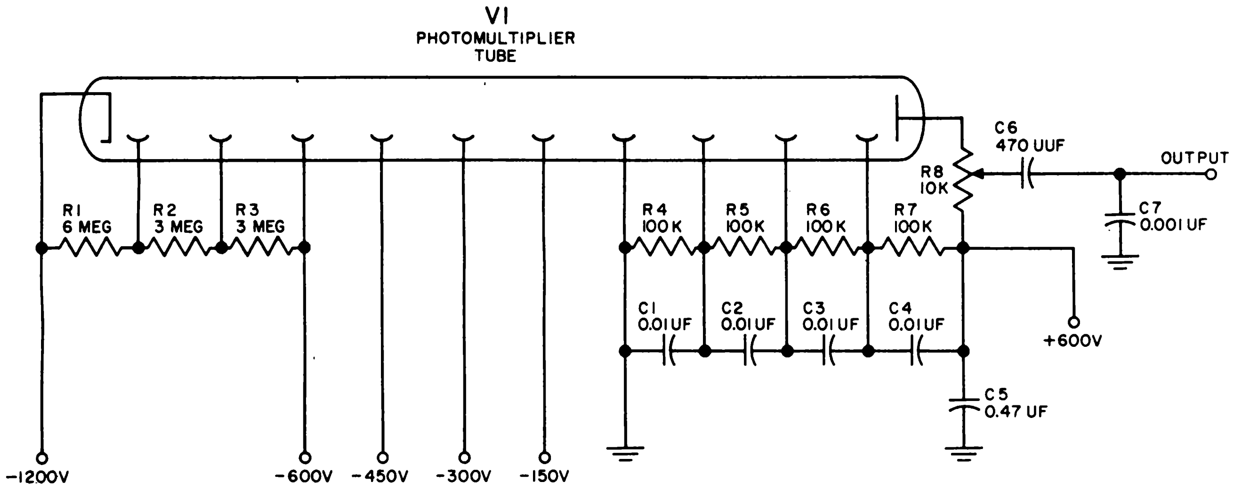

Figure 3—8. Area Discriminator, Model B, Schematic Diagram

Figure 3–9. Area Discriminator Amplifier, Model A, Logic Block Symbol

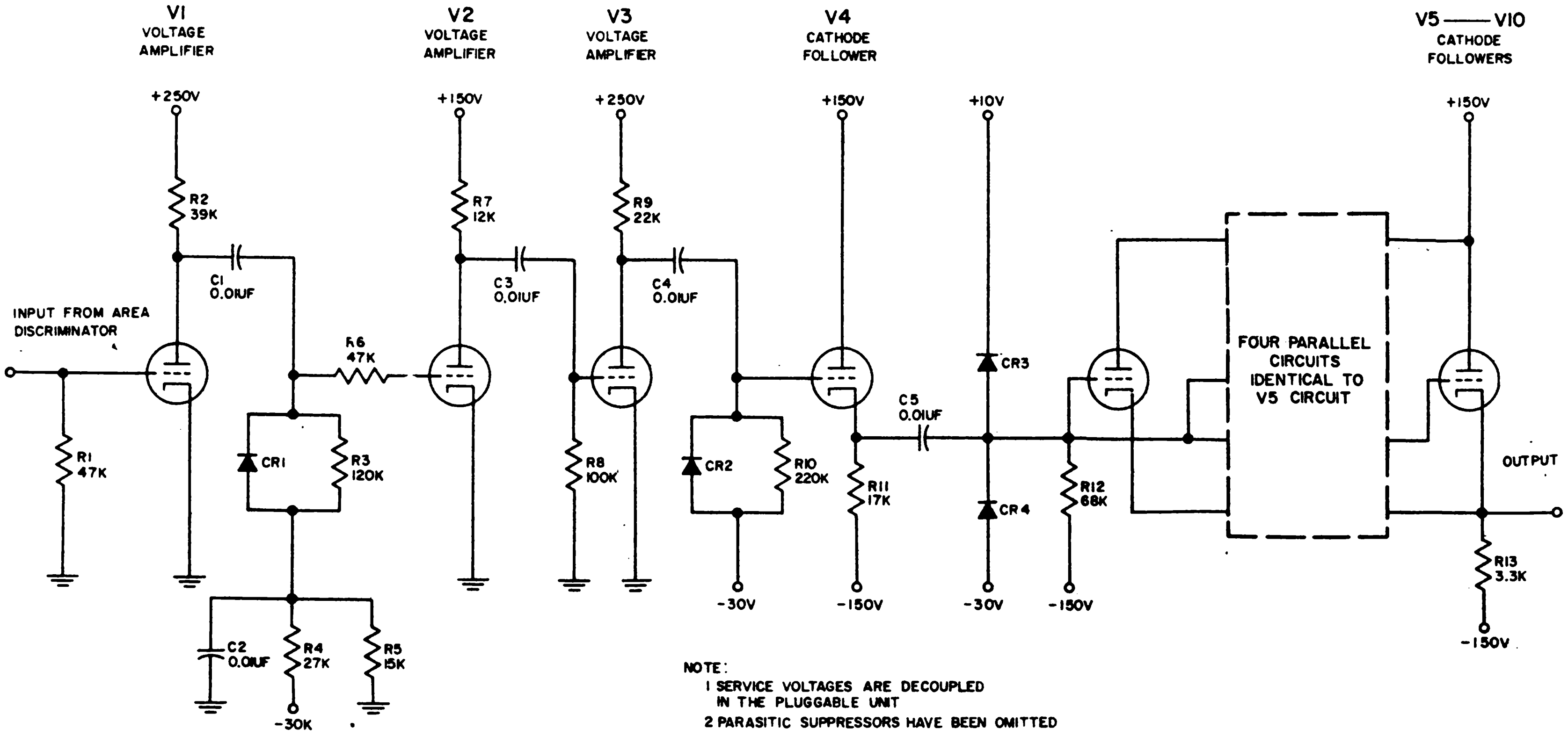

NOTE:
1 SERVICE VOLTAGES ARE DECOUPLED IN THE PLUGGABLE UNIT
2 PARASITIC SUPPRESSORS HAVE BEEN OMITTED

Figure 3–10. Area Discriminator Amplifier, Model A, Schematic Diagram

The dynodes in the photomultiplier are coated with an electron emissive substance. Each dynode emits slightly more than four times the number of electrons that strike it, effecting a current multiplication, from cathode to anode, of approximately 1,000,000.

c. The output of the photomultiplier is proportional to the blue light emanated from the unmasked areas of the display screen. The output is a negative pulse the amplitude of which is adjusted with potentiometer R9. This pulse is fed from the moving arm of R9 through coupling capacitor C7 to the area discriminator amplifier.

3. Area Discriminator Amplifier, Model A

a. The model A area discriminator amplifier (aADA) is a nonlogic circuit employed to amplify and shape the electrical pulses from the area discriminator. The logic block symbol for the aADA is shown in figure 3-9.

Fig. 3-9, 3-10
Page 1980

b. Basic Operation

1. The schematic diagram for the aADA is shown in figure 3-10, foldout. Table 3-5 lists the associated detail parts and their functions. The first three stages of the aADA amplify and invert the low level negative-going input pulse from the area discriminator. The amplified positive-going pulse at the plate of V3 is then applied to cathode follower V4, an interstage buffer. The positive pulse, at the cathode of V4, is capacitively coupled to six paralleled cathode followers. The grids of these cathode followers are clamped between +10 and -30V. The output is a positive-going pulse 40V in amplitude.

Table 3-5
Page 1970

c. Detailed Operation

1. With no input, V1 conducts heavily. The negative-going input from the area discriminator reduces the plate current and increases the plate voltage of V1, producing a positive-going input to V2. This stage is biased past cutoff by -10.7V applied to the grid through the voltage divider consisting of R4 and R5. Triode V2 conducts

when its bias is overcome by the positive pulse coupled through capacitor C2. Crystal diode CR1 clamps the grid side of C2 at -10.7V. The positive pulse input to V2 produces an increase in plate current and a resultant negative voltage pulse at the plate of V2.

2. Triode V3 is operated with grid and cathode at ground potential. The negative pulse output from V2, coupled through capacitor C6, produces a positive-going output at the plate of V3. This pulse is applied through coupling capacitor C8 to V4. This stage is biased at -30V and the operation of its grid current is identical with that of V2. Cathode follower V4 acts as a buffer between the voltage amplifier section of the aADA (V1, V2, and V3) and the paralleled power cathode followers.

3. The output of V4, a positive-going pulse is capacitor-coupled to the grids of the six paralleled cathode followers through capacitor C12. The grid level of these tubes, with no input, is set at -30V by diode clamp CR4. Since the cathodes are returned to -150V through resistor R36, the cathode followers normally are conducting, resulting in a cathode potential that equals the grid voltage (-30V). The circuit output developed across R36 follows the input swing, which is clamped between -30Vand +10V by crystal diodes CR 4 and CR3. The resulting output is a positive-going pulse 40V in magnitude (-30 to +10V). Six paralleled cathode followers are employed to deliver the required power at the output terminal.

VII. Audible Alarms and Warning Lights

A. The Warning Light System alerts the operating personnel at Display System consoles that either attention of an action on their part is required. Two types of warning devices are provided for display consoles; audible alarm units and warning light modules. These devices are controlled by the Central Computer, and they produce both a visual and an aural alarm in one or more of these indicating methods: a pulsating filament lamp, a continuous glow of a neon lamp, and an audible alarm (an intermittently operating bell). The bell functions at the same repetitive frequence as the filament lamp; a bimetallic strip operating as a flasher is common to both alerting devices. The continuously illuminated neon lamp will continue to glow until the Central Computer acknowledges the resulting action (an appropriate manual input message) taken by the operator in response to the warning light indication. The operator know the manual input message has been transferred when the neon lamp is extinquished.

Both the audible alarm and the intermittently (pulsating) lighted lamp can be inactivated by depressing the RESET pushbutton on the display console. Whether one or both alarms are in service is dependent upon the setting of a switch in each console. This switch, which de-energizes the bell only, is located in the back of the module. In the audible alarm unit the switch is on the subpanel.

B. Audible Alarms

1. There are two types of audible alarms. One is a normal alarm that is used at each desk section, and the other is a special alarm used if an extra audible alarm is required at a desk section. Both types operate in the same prescribed manner. Their only differences are physical. "Audible alarm" is the common term employed to mean the combination of bell, filament and neon lamp (one each), reset button, and associated circuits.

2. Normal Audible Alarm

a. When an audible alarm is received at a console, a bell is sounded intermittently, and two lamps on the audible alarm unit are lighted. One light is the continuous neon glow, the other is the flashing incandescent light. The flashing mechanism provided for the filament lamp is connected to the bell as an interrupting d-c device to enable the bell to be sounded.

3. Special Audible Alarm

   a. As previously mentioned, the special audible alarm functions exactly as the normal audible alarm. It, too, is used to call the console operator's attention to a situation that may require his action.

   b. Physically, the special alarm is a package unit that conforms to the dimensions of a standard panel module so it can be mounted on the front panel of a Command Post console desk section. The bell, two lamps, bell disabling switch, and associated circuits are in a single assembly that is accessible when the front panel is raised.

C. Warning Light Module

1. Unlike the audible alarm unit, the warning light module is a specific warning device. It makes use of 10 neon lamps separately labeled. When lighted, a neon lamp will be indicative of a specific message. Each neon lamp is individually controlled by the Warning Light System and cannot be extinquished by the operator. Normally, only one Command Post console desk section is equipped with a warning light module. Wiring provisions have been made so that any desk section can have a module added to it. Also, if one desk section has need for a second warning light module, special lines can be added from the Warning Light System for its operation. The 10 neon lamps are so wired from the Warning Light System that a lamp will be lighted at a signal from either computer.

D. Warning Light System, General Theory

1. To aid understanding of the warning alarm treatment restricted to the Display System, a brief description and explanation of the rest of the Warning Light System follows.

2. Functional Description

   a. The Warning Light System consists of the warning light control element, the warning light storage element, and the warning light interconnection and

Refer: Fig. 5-68
Page 2050

indicator element. The warning light control element and the warning light storage element are duplex. The warning light interconnection and indicator element is simplex, but provision is made so that warning lights and audible alarms at each console can indicate information from either of the computers.

b. A maximum of 256 bits of information, applied from the Central Computer through the IO register, can be indicated simultaneously by the Warning Light System. Application of the proper pulses to the Warning Light System causes these bits of information to appear at the various consoles in any of the forms previously described; i. e. , a continuous neon glow, an intermittently lighted lamp, or a bell alarm. The 10-bit neon warning light module has individually prescribed labels that can indicate any required tactical or functional information. The warning light indications are informative only when associated with a label.

c. One warning light associated with each of the 256 bits of information appears on each of the duplex maintenance consoles. One bit of information can appear on as many as three different display consoles.

3. Logic Operation, General

a. Control signals from the Central Computer applied to the light control element (fig. 5-68) enable that element to condition the light storage element so that information contained in the IO register can be read into the light storage element. The information contained in that element is then applied to the indicator element. The information to be supplied to simplex units is applied directly to the indicator element, while the information supplied to duplex units is applied through the switching relays to the indicator element. The information applied to the indicator element appears on the various display consoles in any one of the three alarm indication methods. Provision is made so that the indicator element can receive information from either computer A or computer B. A signal can be applied by the manual reset circuits to clear the light storage element so that the Warning Light System can be tested.

E. Functional Operation of Warning Alarms

1. The general functional and logical operation of both the audible alarms and the warning lights will be discussed as applied to the Display System only. Because the two types of audible alarms operate identically, only the operation of the normal alarm will be explained.

2. Audible Alarms

   a. The schematic for the normal alarm is shown in figure 5-69. A normal alarm-relay signal is supplied by a thyratron in the Warning Light System. This signal energizes relay Kl through the normally closed contacts of RESET pushbutton Sl.

   Refer fig.
   5-69
   Page 2050
   or 2070

   b. When relay Kl is energized, it connects the bi-metal flasher K3 and relay K2 through the K2 element which periodically opens a set of contacts and interrupts current flow through relay K2. The contacts of relay K2 open and close to conform to these interruptions and establish the intermittent opening and closing contact rate of relay K3. These are the contacts that apply the pulsating 28 bolts to the filament lamp X10. The same voltage is applied to bell I28 if ALARM BELL switch S30 is closed. S30 is a bell-disabling switch normally for use by maintenance personnel.

   c. When RESET pushbutton Sl is depressed, relay Kl is de-energized, opening the -48 - volt circuit, and K2 opens the 28-volt circuit to the bell and the filament lamp. Relay Kl remains de-energized until another normal-alarm relay

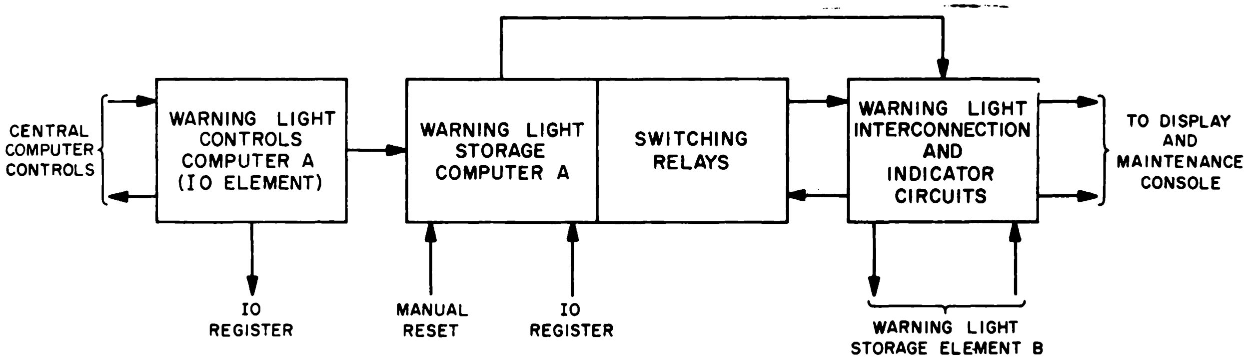

Figure 5–68. Warning Light System, General Logic

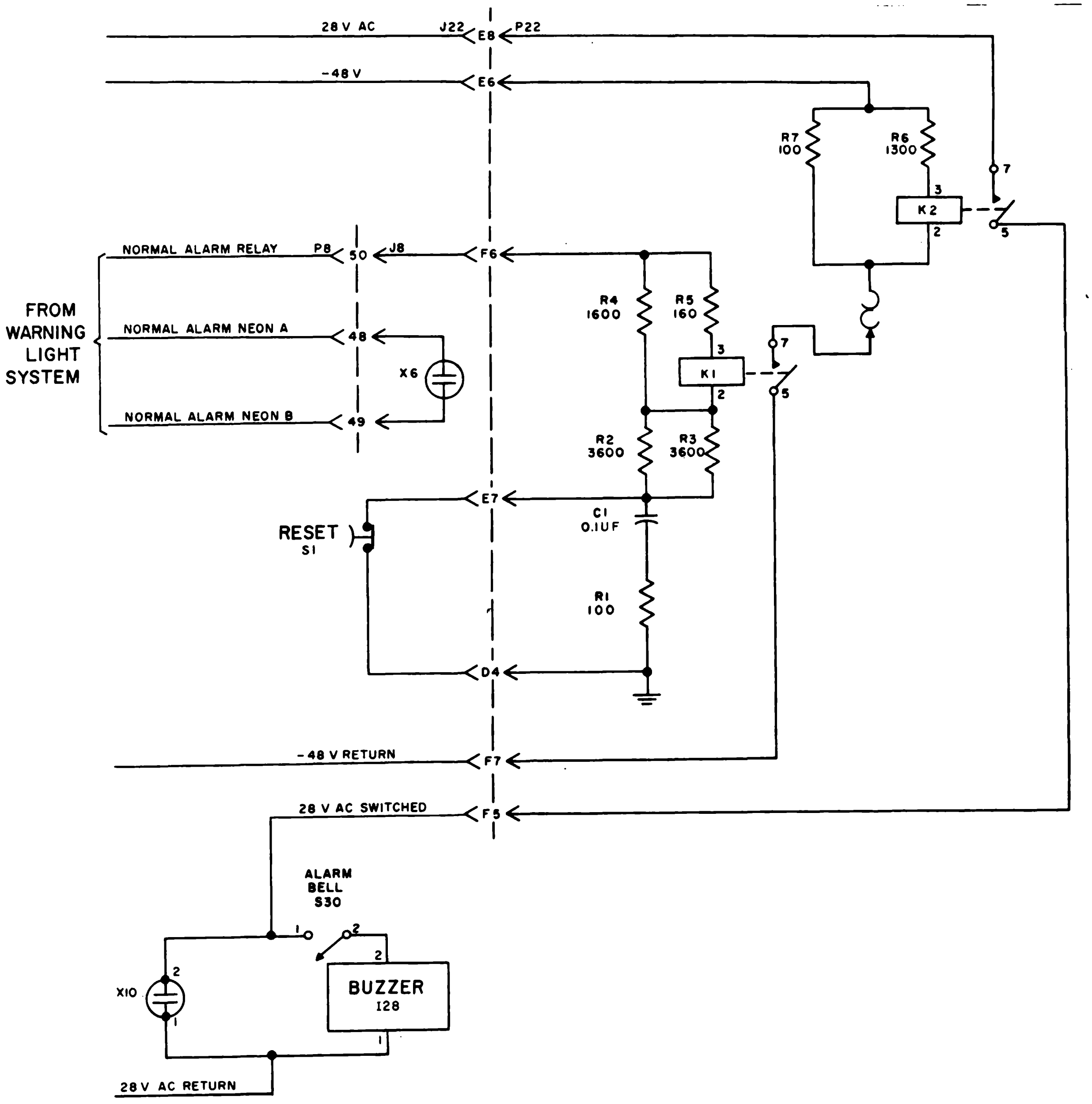

Figure 5–69. Normal Audible Alarm Unit, Schematic

signal is received from the Warning Light System and is independent of the audible alarms. The lamp glows when an alarm signal is received and usually remains in that state until a message dispatched to the manual input element is appropriately acted upon by the Central Computer System.

3. Warning Lights

a. The warning light control element (see fig. 5-68) contains the control circuits that determine to which flip-flops in the warning light storage element contains 256 flip-flops arranged in eight word-rows of 32 flip-flops that make up a word-row. Each of these flip-flops is associated with one flip-flop in each of the eight word-rows in the light control element. For example, the flip-flop in the IO register that indicates the left sign bit is associated with the flip-flop in each of the eight word-rows in the light storage element that indicates the left sign bit. Thus the output of one flip-flop in the IO register is applied to eight flip-flops in the light storage element.

Refer to Page 2070

b The information to be read into the light storage element is applied by the Central Computer to the IO register. The process used to read the information into the light storage element employs both complementing and clearing.

c. Before information can be read into the Warning Light System, a preparatory cycle is required to condition the system to receive the information. Only one preparatory cycle is required, regardless of the number of words that are to be read into the system at one time.

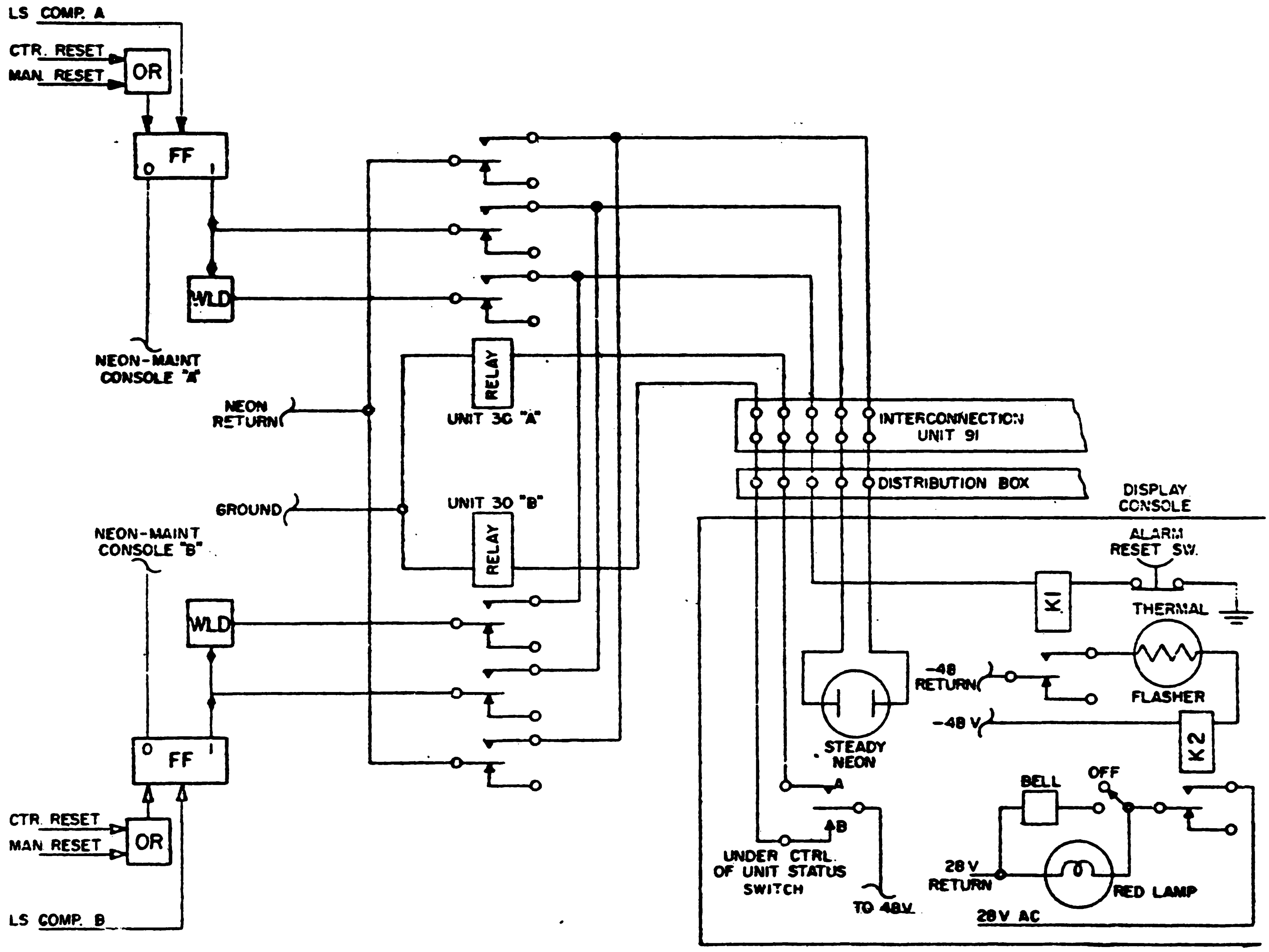

DISPLAY WARNING LIGHT DISTRIBUTION

2070

4. Signal Flow

a. The signal from the audible alarms and the warning light modules comes from either warning light storage unit 30A or warning light storage unit 30B. Whether the signals come from A or B depends upon the signal switching relays located in those two warning light storage units. These switching relays are energized by the unit status control signals sent by the desk sections UNIT STATUS switch.

Refer to Fig.
5-70
Page 2090

b. Figure 5-70, shows the signal flow between the warning light storage units and one Command Post console desk section. This figure shows the 20 lines for the warning light module, three lines for the normal audible alarm, and two lines for unit status control signals. The broken lines show the two extra unit status control lines and the 20 extra warning light lines that must be added if a second warning light module is used at the desk section.

c. The lines connecting the duplex warning light storage units to the various warning devices at the console desk section pass through duplex interconnection unit 91 and through signal distribution box 5. Patching at these two places determines the number and nature of the warning signals sent to each desk section. The cable connections between the units are fixed; therefore, a patch-cord method is necessary for cable interconnections.

Warning Light Driver

Refer to page
2100

a. A positive signal applied to the control grid causes the thyratron to fire. When V1 conducts, K4 is energized. The N/C contacts of K4 open and allow R 10 & 11 to limit the current needed to keep K4 energized. V1 is extinguished when the Reset Button is depressed.

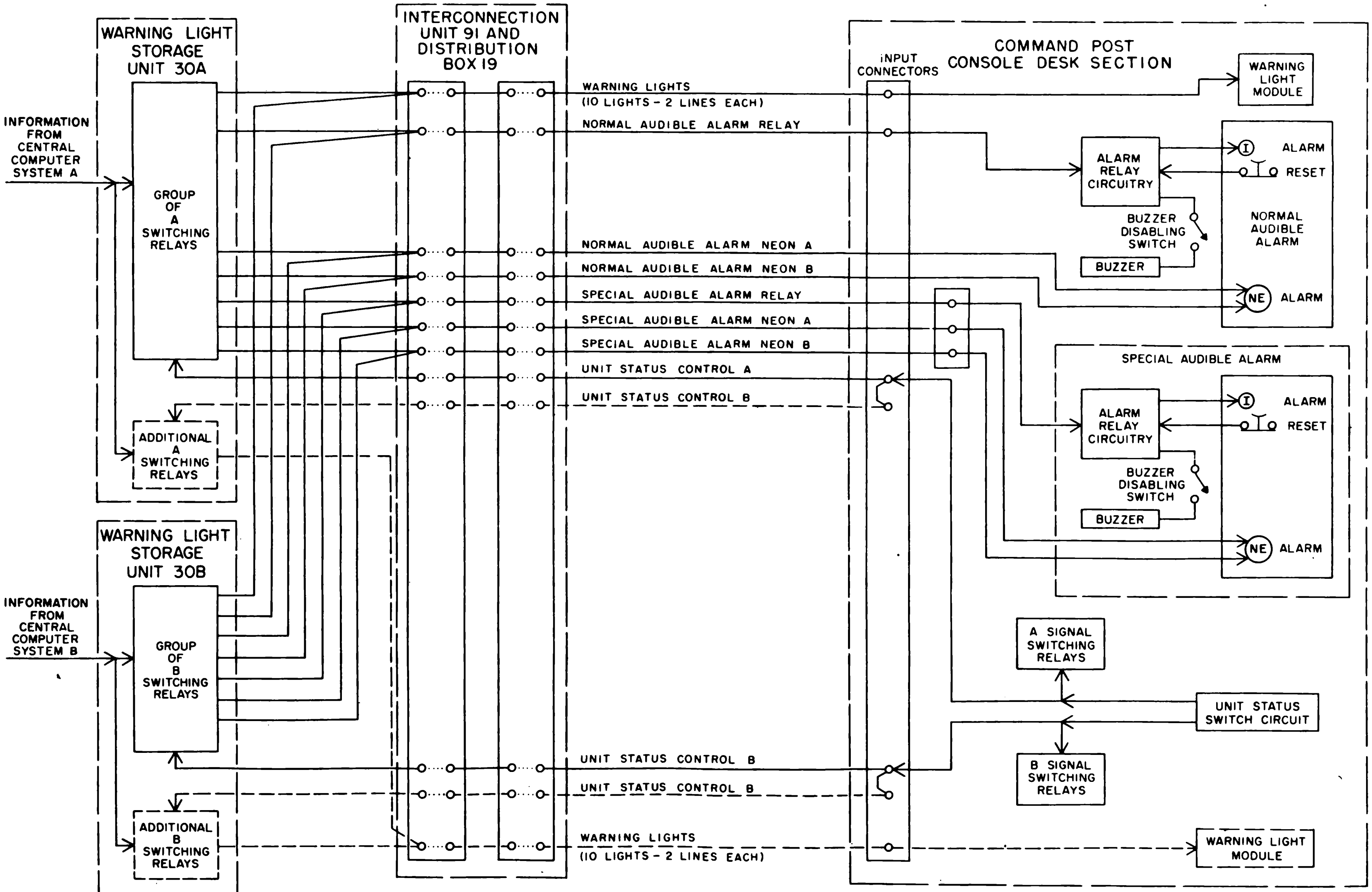

NOTES:

1. ···· INDICATES PATCHING OF LINES AT WARNING LIGHT INTERCONNECTION UNIT AND DISPLAY SYSTEM SIGNAL DISTRIBUTION BOX.
2. ——— INDICATES CIRCUITING INVOLVED FOR ADDITIONAL WARNING LIGHT MODULE, IF REQUIRED.

Figure 5–70. Flow Diagram of Warning Light Storage Units and One Command Post Console Desk Section

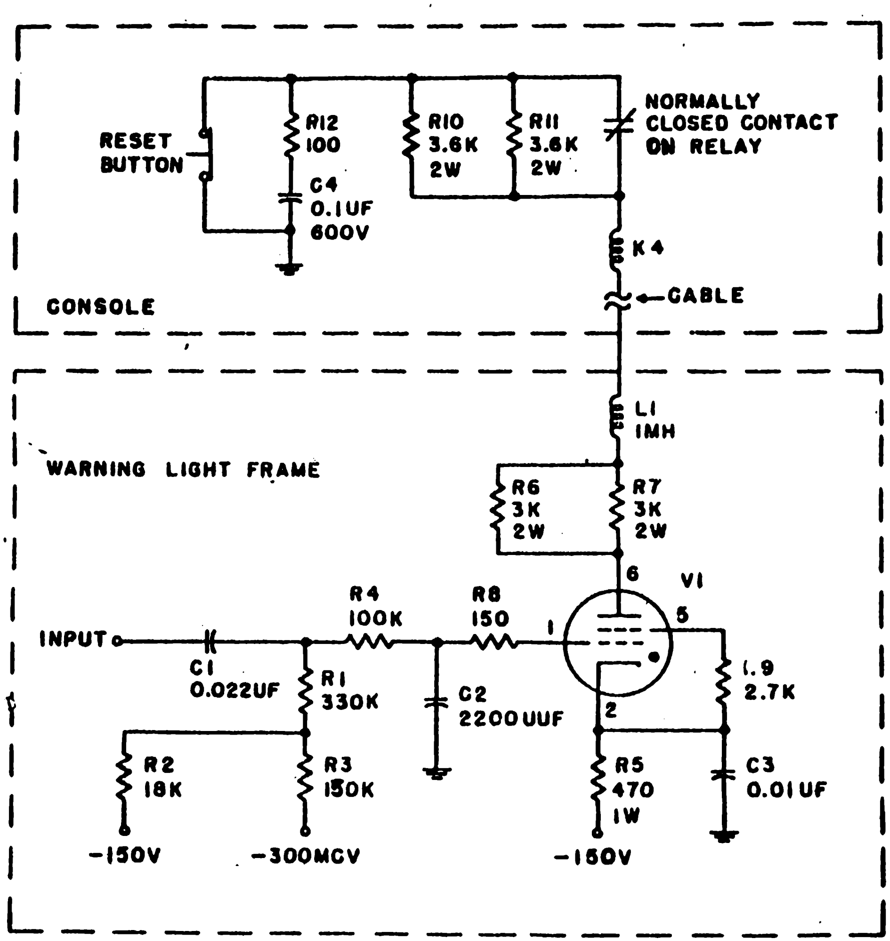

WARNING LIGHT DRIVER

VIII. SD Camera Element

A. Purpose

1. The situation display camera element (SDCE) produces a 35-mm film record of selected situation displays. This permanent film record is photographed at special display consoles containing essentially the same SD CRT as the other consoles with this exception: the phosphor is a P-11 type.

2. The still picture camera employed is semiautomatic. It is so controlled that signals from the SDGE to the SDCE are applied to these consoles to operate the camera. Figure 5-50 is a simplified flow diagram of the SDCE control.

Fig. 5-50
Page 2130

3. Tactical or simulated situation displays generated by the active machine (computer) can thus be subsequently analyzed to check the performance and adequacy of equipment, personnel, and tactical deployment. Displays generated by the standby machine contain the results of maintenance programs and are analyzed for successful or error-indicating displays. By this means, it is possible to run off a program in continuous steps without stopping to analyze intervening displays between these steps, and the permanent record permits detection of even the slightest deviation from a standard display pattern.

4. Since records of both standby and active displays are required, the SDGE is duplexed. All of its physical components are located in duplicate units, designated as machine A and machine B. One of the two cameras, depending on which one is in active status, records active displays, the other records standby displays.

B. Functional Operation of SDCE

1. The situation display camera console is an SD console with these modifications:

   a. A P-11 phosphor and a white implosion shield on the CRT to improve its photographic qualities.

b. A mounting frame for the camera and electrical connections.

c. A camera control unit occupying the space normally provided for the digital display circuits.

The console then can be said to contain a situation display indicator section (SDIS), modified by the circuits of the camera control units. These modifications provide for display selection remote from the console to supplement the selection facilities normally available at the console. The supplementary display selection, [redacted]

2. Mode Selection and Camera Timing

   a. The selection of the mode to be displayed is normally controlled by the computer program. The circuits which provide this automatic control are located in unit 5 and act through control circuits located in unit 25. The latter circuits also control the timing and operation of the camera. Manual mode selection and camera control are possible by means of control switches on the duplex maintenance console.

   b. The film is normally advanced, or indexed, after a frame has been exposed. The camera exposes one frame at a time, with each frame recording the display that is generated during one complete SD cycle. Indexing can be suppressed, however, to record any number of SD display cycles on one film frame.

   c. Whenever a new frame is exposed, the camera automatically photographs the contents of its recording chamber which is illuminated at this time. The frame is thus identified by a data card, a clock, and a frame counter.

3. SDCE Information Flow

   a. The CRT display will remain unintensified until such time as a camera control cycle is initiated by such an operate instruction from the Central Computer in place of SD.

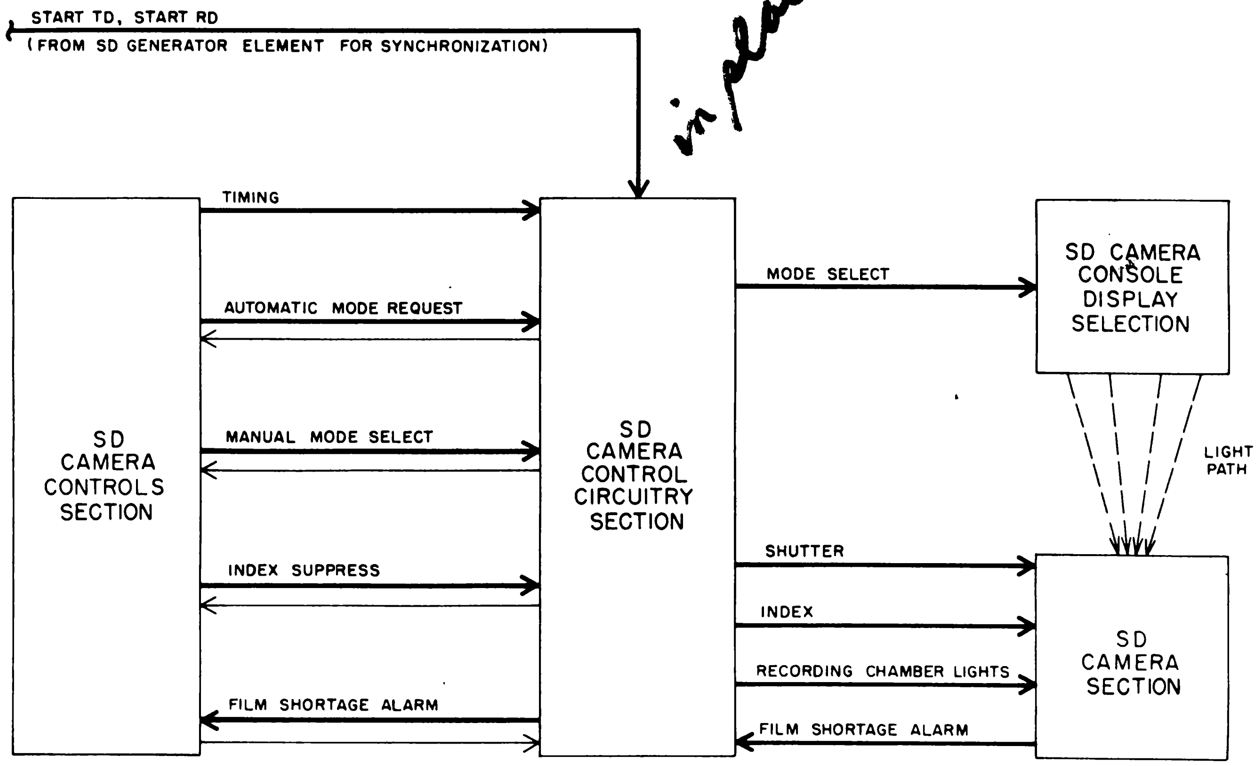

Figure 5—50. Situation Display Camera Element, Simplified Flow Diagram

System or manually from the duplex maintenance console. The instruction from the Central Computer System provides automatic control. Two instructions exist, one for each mode.

b. The situation display camera control section synchronizes the operation of the Display System. The section generates two types of control cycles designated as modes, which enable the SD camera to photograph two different types of messages. The desired operating mode can be selected either manually or by the Central Computer System. The operation of the camera is identical in either mode.

c. ~~When both computer and manual initiation occur simultaneously, the manual instruction takes precedence.~~ Indicator lights mounted close to the manual switches on the auxiliary console inform the operator that the camera is program-controlled in one or the other mode. Status indication signals prevent the Central Computer System from sending instructions while manual operation is in progress. All control signals, irrespective of their sources, are routed into the camera control section, where they are utilized to produce the intensification signal for the selected mode. These signals are also synchronized, with the start-RD and start-TD signals from the SDGE intensifying the display for the duration of a combined TD and RD cycle.

4. Index Suppress

a. The index (film advance) must be suppressed if more than one picture is to be taken on the same frame of film.

b. Film advance at the end of a camera cycle (index) can be suppressed by operating a switch on the duplex maintenance console.

5. Situation Display Camera

a. The situation display camera (SDC) is a semiautomatic type specifically designed to photograph the flourescent image on the viewing screen of the 19-inch SD CRT with the P-11 phosphor. The camera assembly includes the camera body, film indexing mechanism, recording lights, camera optical and shutter system, and a film magazine.

6. Alarms

   a. An audible and visible alarm circuit on the duplex maintenance console indicates when less than 5 feet of unexposed film remains in the camera magazine and/or if a magazine is not installed ready for use.

C. Logic Operation of SDCE

1. The situation display camera control circuits supply the SD camera with the control signals necessary for its operating sequence. Action for mode 1 is initiated manually by depressing the START CAMERA MODE 1 pushbutton on the duplex maintenance console or automatically by the Computer Operate (SD camera mode 1) instruction (PER 31). For display in mode 1, the upper eight category and DAB switches on camera console 171 are depressed. To initiate mode 2 the START CAMERA MODE 2 pushbutton on the duplex maintenance console is depressed, or the Operate (SD camera mode 2) instruction, (PER 32), is performed by the Central Computer System. For this mode, the lower seven category and DAB switches are depressed. Usually all category and DAB switches are depressed, and the message for each mode is intensified as each mode is called for manually or automatically.

   The sequence of camera control signals is as follows:

   a. A mode select flip-flop initiates signals to turn on lights in the recording chamber.

   b. The camera control section next senses the following start-tract-data pulse from the Drum System to determine the beginning of a display cycle.

   c. After the start of a display cycle is sensed the camera console situation display tube is intensified for the messages included in the mode selected, and the exposure begins.

d. When the display cycle completion is sensed, the camera console intensification gate goes down, the shutter closes, and the film is indexed (advanced).

With the end of the sequence described above, the camera comes to a halt, ready for the start of a new photographic sequence.

The output of the camera control circuits section are the same whether the sequence is initiated manually or by the Central Computer System. The control circuits are common for part of the operation when functioning in either sequence. For this reason, the operation of the camera control circuits section when manually initiated is described first. Parts of the section used only for computer operation are then discussed.

2. Manually initiated Operation

   a. The SD camera operation is manually initiated by depressing the START CAMERA MODE 1 pushbutton on the duplex maintenance console for photographs of mode 1, and by depressing the START CAMERA MODE 2 pushbutton for photographs of mode 2. These two operations are essentially the same; therefore, only one is described in detail in the following text. Figure 5-51, is a diagram of the circuits used in the display camera element and should be referred to during the following discussion: **Fig. 5-51, Page** 3610

   b. Initiation

      1. Depressing the START CAMERA MODE 1 pushbutton causes pulse generator PG 2 to send a pulse to the mode select flip-flop (FF 5). The pulse sets FF5 and is simultaneously applied to single-shot multivibrators, SS 1. The 1-side output of FF 5 is connected to AND 1, providing one of the inputs for conduction of this AND. SS 1 sends a wide pulse to relay driver RYD 1, which energizes relay K3. This relay has four sets of contacts, three of which are normally open and one normally closed. (The term

"normal" refers to the de-energizing of quiescent state of all relays in the camera control element). Energizing the K3 relay causes the open contacts to close, lighting the lamps in the recording chamber of the camera opening shutter and applying a level to condition gate tube GT7 is shown on line 6 of the timing diagram (Fig. 5-52). The delay is necessary to allow the lamps in the recording chamber to light up fully and to permit the shutter to open (lines 4 and 5 in the timing chart). The fourth set of K3 contacts opens, preventing generation of an index (completion) pulse.

Fig. 5-52
Page 3630

c. Intensification

1. Start-TD (track data) and start-RD (radar data) pulses from the SDGE are fed to an OR so that the first to appear will pass through GT7, setting intensify FF6 (lines 7 and 8, Fig. 5-52). The 1-side output of AND 1 (mode 1 selected) is connected through the switches of the console, causing intensification of the mode-1 display. The output of AND 1 is also applied to the vacuum tube relay driver (VRD 1), which energizes relay K9. The contacts of this relay apply voltage to an indicator lamp located on the duplex maintenance console. The lamp indicates that a photographic sequence is in progress. The second pulse (start TD or start RD) passes through GT 7 and GT 8, complementing FF7 to the 1 state. The third pulse (start TD or start RD) passes gate tubes 7, 8, and 9 and is applied to SS 2 through an OR in the automatic index portion of the SD camera control circuits section of the control element.

d. Automatic Indexing of Film

1. The pulse that triggers SS 2 (line 9 of fig. 5-52) produces a wide pulse which is applied to RYD 2. Control relay K4 of the automatic index control is thus energized, causing three sets of

normally closed contacts to open and three sets of normally open contacts to close. This results in the following action.

a. Delay action relay K5 (line 11 of fig. 5-52) energized through one of the normally closed contacts of K4, is de-energized. Nothing happens to the contacts of this relay for 200 to 300 ms because of its delayed action.

b. Relay K3 (line 3 of fig. 5-52) which is energized through one of the normally closed contacts of K4, is de-energized.

c. Relay K6 (line 13 of fig. 5-52), is equipped with power contacts, is thus energized, and a 5-ampere current from the -48 volt supply is applied via one of the contacts of K6, causing an indicator lamp marked CAMERA INDEX on the duplex maintenance console to light.

d. The remaining two contacts of K4 disconnect a —30-volt level from relay driver RYD 3 and connect a ≠ 10 -volt level instead. This action has effect only if the CAMERA INDEX SUPPRESS switch on the duplex maintneance console is closed.

   1) After the delay period of 200 to 200 ms has expired, the contacts of relay K5 open, de-energizing K4 and K6 in turn thereby permitting indexing of the film. De-energizing the relay K4 allows K5 to pick, firing PG-4 which will generate a completion pulse. (see lines 10, 11, 13, 14, 15, and 16 of figure 5-52).

   2) The circuit is ready for the next photographic sequence, which may be initiated in the manner described or by a Central Computer System instruction.

3. Computer-Initiated Operation

a. When the operation of the SD camera is initiated by a program instruction from the Central Computer System, the operation of the SDCE is the same as described in 4.3.1 of this chapter, with the exception of the initial depressing of the START CAMERA MODE pushbuttons. Sequence of additional operations is necessary before the circuits reach the stage equivalent to that for manual initiation.

b. Interlock Circuit

1) An operate-31 or operate-32 pulse is sent by the Central Computer System to the situation-display camera mode selection section during timing pulse OT9. The operate-31 pulse indicates that mode 1 is initiated, and the operate-32 pulse indicates that mode 2 is initiated. Either pulse passes through an OR circuit and sets request operation FF3 Mode request FF4 is set by an operate-31 pulse and cleared by an operate-32 pulse. Assume that relay K2 is energized and (interlock) FF2 is set. The 1-side output of FF2 conditions GT2, passing TP5 from the Central Computer System. The gated pulse sets FF1 (sync) and is gated by GT4, which is conditioned by the 1-side output of FF3. The output of GT4 is distributed on four lines to produce the following conditions:

a) Flip-flops 2 and 3 are cleared,

b) Gates 5 and 6 are sensed. Only one of these gates is conditioned by the output of the mode request flip-flop (FF4), depending on which operate pulse has been sent by the Central Computer System. The contents of FF4 are thus transferred to the mode select flip-flop (FF5).

c) The single-shot multivibrator (SS 1) is triggered via an OR, starting the sequence of operation described in 2.a of this chapter until the completion pulse is delivered by PG4.

d) The pulse from GT 4 is sent to the Central Computer System, where it sets the sense-SD camera flip-flop.

2) The completion pulse generated by PG4 clears synchronizer FF 1, previously set by the gated TP5. The 0-side output of FF1 conditions GT 1. Timing pulse TP1 from the Central Computer

System passes through GT 1 to set interlock FF 2 via an OR.

3) The 1-side output of FF2 conditions GT 2, and the following TP 5 is passed to set FF 1. This flip-flop remains set until another completion pulse has been produced either as a result of a Central Computer System operate pulse or through manual initiation of the operational sequence. The gated TP 5 is also applied to GT 3. The output of GT 3 is sent to the Central Computer System to clear the sense flip-flop.

4) The sense flip-flop, located in the Central Computer System, set at the beginning of the camera cycle by the output of GT 3, indicates whether the camera cycle is in progress. The Central Computer System instruction Sense Camera ON (BSN 35) is used in the program to sense the flip-flop and thus to determine the progress of a photographic sequence. If the flip-flop is set, the program branches to prevent a possible loss of an operate instruction. However, provisions are made to store one operate instruction.

c. Remember Request Circuit

1) If a second operate pulse is sent from the Central Computer System before the first one has caused a complete operational sequence, the second pulse is temporarily stored by setting request operation FF 3 and either setting or clearing mode request FF 4. When the first cycle is completed, a second cycle is started by a TP 5 passing through GT 2. This gate is conditioned by the 1-side output of interlock FF2, which has been set by the synchronizing circuit. While the first cycle is in operation, a third operate pulse from the Central Computer System cannot be accommodated by the remember request circuit; therefore, the third pulse supersedes the second pulse, which remains in storage.

d. Flip-Flop Preset Circuit

1) The purpose of the flip-flop preset circuit is to put all flip-flops in the state required for proper initial functioning of the control

circuits. When power is applied to the system, relay K1 is energized by the +90-volt power supply. Two normally open contacts close. One of the contacts applies -48 volts to the relay K2, closing its normally open contacts applies ground to PG 1, thereby producing a pulse which clears FF's 3, 6, and 7 and sets FF2. The 1-side output of FF2 conditions GT 2, which passes TP 5. The gated pulse simultaneously sets the sync FF1 and passes through GT3 (conditioned by the 0 side of FF3) to the Central Computer System, where the pulse clears the sense flip-flop (FF8), indicating to the Central Computer System program that the camera control element is ready to begin operations.

2) The flip-flop preset circuit prevents the taking of undesired photographs when the power comes on. This circuit also prevents malfunctions which would occur, for example, if energizing the equipment cleared interlock FF2 and set FF1.

e. Suppress Automatic Index Circuit

1) This circuit provides for multiple exposures. When the CAMERA INDEX SUPPRESS switch at the duplex maintenance console is in the SUPPRESS position, relay K7 is energized, preventing relay K6 from being energized, and no power is supplied to the index solenoid. Relay K8 (line 12 of fig. 5-52) is energized by relay K4 and relay driver RYD 3. Relay K8 has three sets of contacts, two of which are normally closed and a third normally open. The two closed contacts open, preventing current flow to the lamps in the recording chamber of the camera and preventing pulse generation by PG 5. The third set of contacts lights the SUPPRESS CAMERA INDEX indicator lamp at the duplex maintenance console.

2) When the SUPPRESS CAMERA INDEX switch is returned to its normal (off) position, both K7 and K8 are de-energized, causing PG 5 to be turned on. The resultant pulse is applied to an OR via one set of contacts of de-energized relay K3. Automatic indexing takes place as

described previously. If a camera cycle is in progress when the SUPPRESS CAMERA INDEX switch is turned off, relay K3 is energized, and the pulse from PG 5 has no effect.

f. Alarm Control Circuit

1) The alarm control circuit (fig. 5-51) responds to two conditions of the film magazine:

a) Magazine is not in place.

b) Magazine contains less than 5 feet of unexposed film.

2) Either condition causes a contact to close and send a signal to the vacuum tube relay driver, VRD 3. VRD 3 energized relay K11, whose contacts close and apply -48 volts to a buzzer and to a red indicator lamp marked MAGAZINE at the duplex maintenance console. The buzzer is connected to the normally closed contacts of relay K12. To turn the buzzer off, the BUZZER OFF pushbutton is depressed, and relay K12 is energized and remains energized, disconnecting the buzzer until the alarm condition is removed and K11 is de-energized. The indicator lamp is independent of the buzzer and remains lighted until K11 is de-energized.

4. Manual Controls

a. The following manual controls are located at the duplex maintenance console:

1) START CAMERA MODE 1 pushbutton.

2) START CAMERA MODE 2 pushbutton.

3) CAMERA SUPPRESS AUTOMATIC INDEX switches.

4) BUZZER OFF pushbutton.

b. The following three controls are located at the camera console:

1) MANUAL INDEX pushbutton.

2) LAMPS, RECORDING CHAMBER control

3) MODE INTENSITY TEST switch

c. When the film magazine has to be removed, the MANUAL INDEX pushbutton is pressed 15 times. Each time the pushbutton is pressed, relay K6 is energized and the film advances about one foot so that the last exposed frame is ensured complete enclosure in the magazine. In the same manner, after installing a fresh magazine, the same pushbutton is depressed 15 times to run off sufficient film to ensure the start of recording operations with film unexposed to ambient light.

d. The RECORDING CHAMBER LAMPS control is a variable resistor which permits variation of light intensity in the recording chamber. The MODE INTENSITY TEST switch permits such adjustments as width centering of display, intensity of characters, etc., to be made at the camera console. The displays that can be so adjusted are those that recur without continually initiating the camera cycle by pushbutton or instruction from the Central Computer System. The switch has three positions. In the NORMAL position, displays are intensified only by depressing one of the two START CAMERA MODE pushbuttons on the duplex maintenance console or by an Operate instruction from the Central Computer System. In the MODE 1 TEST position, all categories called for by the eight upper category switches on the console are displayed once each display cycle. In the MODE 2 TEST switch position, all categories turned on by the lower seven category switches are displayed once each display cycle.

Situation Display Camera

a. The situation display camera (SDC) shown is a semi-automatic camera especially constructed to photograph situation displays on the viewing screen of the SD CRT. The camera assembly includes a camera body, film indexing mechanism, recording lights, film magazine, a data card, counters, and optical and shutter systems.

b. The camera is controlled by the SD camera control circuits section (SD CCC) of the SDCE. The SD CCC generates signals which control the camera recording chamber, shutter assembly, film advance mechanism (index) lamps, and film shortage alarm.

c. SD Camera Operations

1) The recording chamber contains exposure counters, a clock, and a data card, which are photographed on a portion of each negative of the situation display. The chamber is equipped with dual decimal counters so that the film exposures can be numbered consecutively for identification purposes. These counters are mounted one above the other, with their dials facing in opposite directions so that the results of one counter are visible from the outside while the reading of the other counter is being photographed. The data card in the recording chamber contains pertinent information to be recorded on the film, and the clock has a 24-hour dial to provide a chronological record for each exposure. To record this information, lamps in the recording chamber are lighted as dictated by the mode of operation.

d. Camera Shutter

1) The shutter of the SD camera is in the open position at the end of an exposure. It closes to prevent film exposure for a period of time sufficient to permit the camera to recycle and transport film for the following exposure. The shutter remains closed until a new cycle has begun. However, since the images on the viewing screen of the CRT are intensified only during a camera operation cycle, the camera remains idle until the next camera operation cycle is initiated, whether the shutter is open or is closed.

e. SD Camera Lens

1) The lens assembly consists of an f/2.3 lens with an adjustable iris diaphragm. Exposure control is determined solely by stopping down the lens, since the intensity of the viewing screen is not varied for photographic exposure. Because of this and the fact that the viewing screen shape does not present a flat field, a diaphragm stop of f/4 is employed under all condtions.

f. Index (Film Advance)

1) The film advance mechanism consists of an electromechanical assembly controlled by signals from the camera control element.

A solenoid serves as the driving force for the gear assembly which indexes (advances) a frame of film every time an exposure has been completed.

g. Film Magazine

1) The film magazine of the SD camera will store 100 feet of 35-mm photographic film. The magazine is equipped with an indicator which shows the quantity of unexposed film remaining on the reel. When less than 5 feet of unexposed film is in the magazine, audible and visual alarms on the duplex maintenance console give warning.

D. Summary Questions

1. True or False

a. The Recording Camera manual controls are all in the Duplex Maintenance Console.

b. Opening the Suppress Index switch during a camera cycle can cause an automatic index.

c. The camera shutter is closed .2 to .3 seconds after the intensity level goes down.

d. A manual Start Mode 1 overrides an automatic programmed Mode 2.

e. The Recording Camera photographs all selected CATS and DABS for a complete SD display cycle.

2. In Figure 5-51 Page 3590 A PG3 is non-conductive. This will cause:

A. No effect any time.
B. Never get completion pulse.
C. No effect if camera cycle in progress when trouble occurs.
D. Can not pick relay 25AV - K7.
E. Intensify all messages all the time.

3. FF5, Figure 5-51, cannot be cleared. Page 3590

A. The shutter can never be opened by the computer.
B. FF-8 will remain set after the first PER 31 or 32.
C. Mode 2 cannot be displayed.
D. K-4 will never pick
E. Prevent completion pulse from ever occurring.

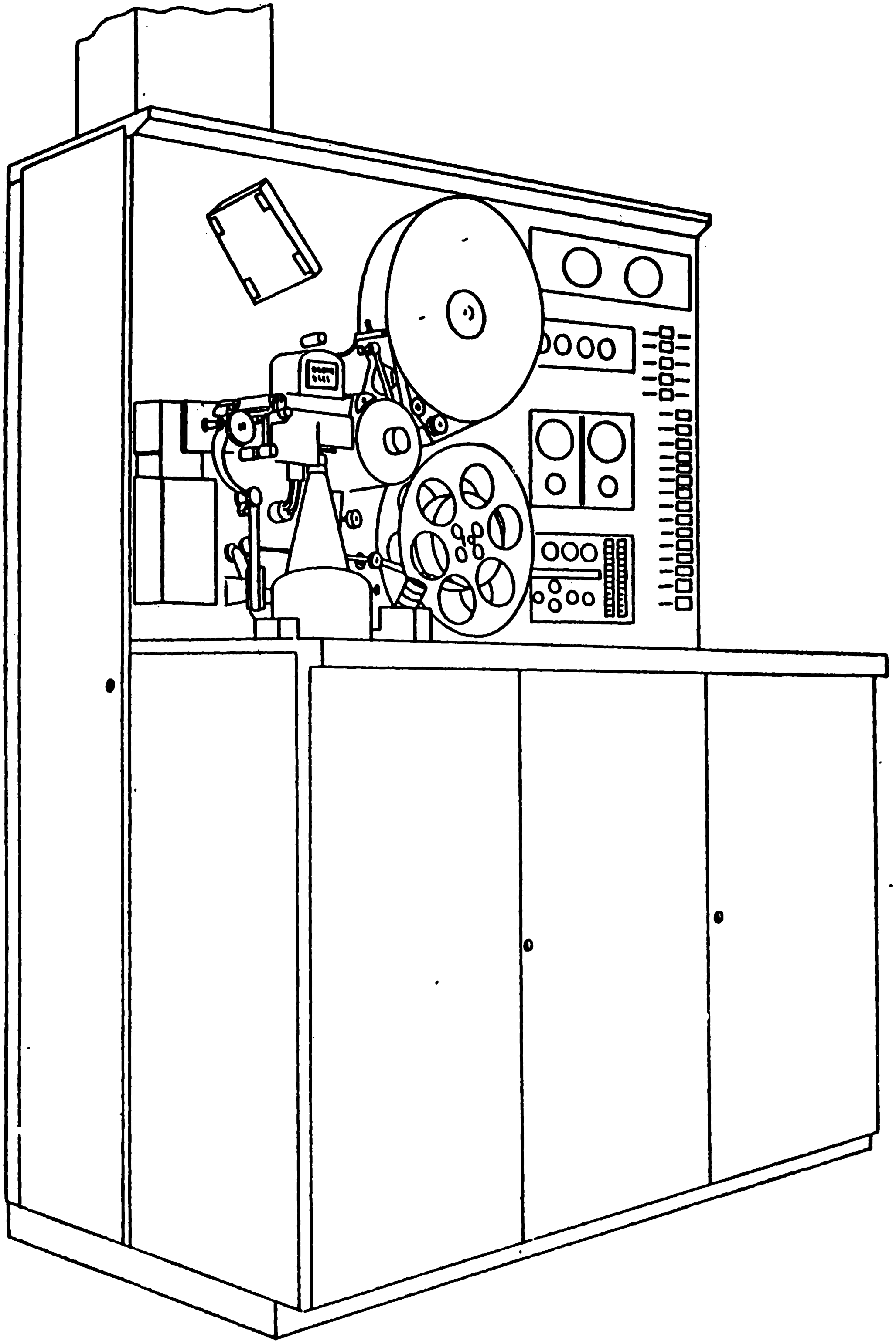

PROJECTOR CONSOLE AN/KD-6(1)

IX. Photographic Recorder - Reproducer Element

A. Purpose

The PRRE was designed to present an enlarged version of the over-all air defense situation to personnel at the command post. Both TD and RD messages are sent to the FRRE in the AN/FSQ7 while only TD messages are displayed in the AN/FSQ8.

There are two projector consoles at a DC or CC sector for the purpose of reliability. Only one console can project at a time under normal operation although some sites have taken steps to have both projectors display at the same time. In this instance, one projector will display stationary messages such as airbases, boundaries , etc. in one color while movable objects such as tracks are displayed in a different color. The color is obtained from plastic overlays on the two projectors.

Limited remote control of categories and expansion is possible from the AC & W desk at the command post.

The photographic recorder-reproducer consists of the units and modules necessary to receive the signal output of the SDGE, to convert these signals to a visual situation display, and to photograph and project the image onto a large projection screen. The physical divisions of this element consist of units 251 and 252, which are the two PRR consoles, AN/KD-6(1), unit 253, the projection screen, and the two 10 button remote control modules (type 10C-PB), located on the aircraft control and warning (ACW) control panel of the Command Post Console, OA-1013-FSQ.

NOTE: See Fig. 5-1 Page 2290

B. Block Diagram Analysis

NOTE: See Fig. 5-8 Page 2300

1. SDS (Situation Display Section)

   a. Input signals from SDGE.

      (1) Display Assignment Bits: There are no display assignment bits (DABs) currently programmed for the PRR. DABs can be used with the present circuits of the PRR, if desired. A more complete discussion of DABs can be found in Part 4.

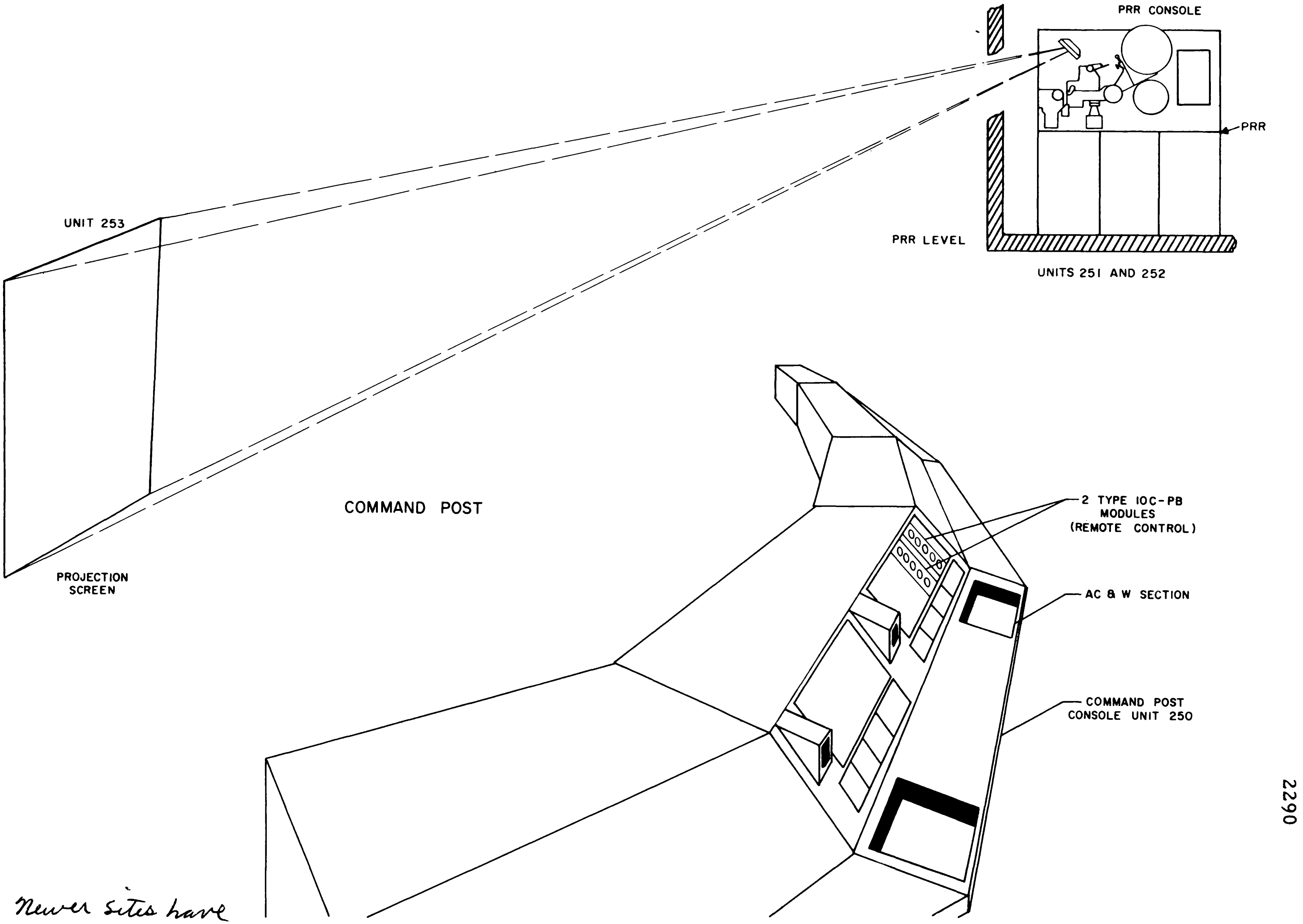

Newer sites have
PRRE Below CommandPost

Figure 5–1. PRRE Components within Command Post Area OLDER SITES

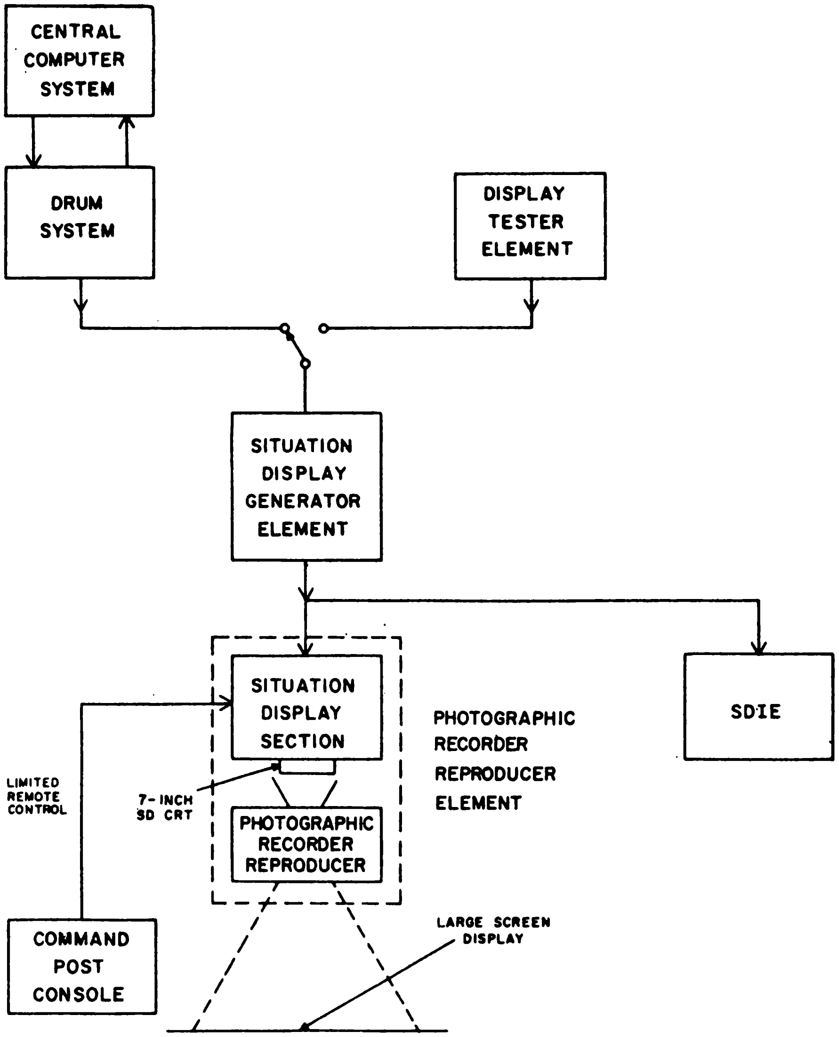

Figure 5—8. Information Flow to Photographic Recorder-Reproducer

(2) B Feature: The B feature is not used by the PRR, but it is connected to the category plugboard.

(3) Radar Data Messages: Radar data messages are now brought into the PRR.

(4) Remote Control: Since it is desirable for the Sector Commander's staff to be able to select the message categories to be displayed, fifteen (15) categories can be remotely selected from the ACW panel on the Command Post console. In order to provide this facility, circuit changes, mainly in the expansion and off-centering circuits, were required. These changes are detailed in section 3.

b. Expansion Input Panel: The expansion input panel and its related circuitry replace the expansion plugboard of the SDIS. The expansion plugboard has more flexibility, but the expansion input panel has advantages that are more desirable than flexibility. The four rotary switches of the expansion input panel can be set to the correct expansion and off-centering positions quicker than the plugboard can be patched up for the same purpose. Thus, considerable time can be saved when it is necessary to change expansion levels and off-centering assignments for the PRRE.

c. Request Display Gate Generator: This circuit is added to insure that the film will not be blurred by the motion of the changing displays. There are about 11 different displays presented during the 30 second period that the recorder shutter is open. This generator allows only one SD cycle to be photographed during this period. By holding the intensity of the display down below that which is sufficient to register on the film, and by intensifying one SD cycle every 30 second period, a clear, unblurred display is recorded.

d. Seven Inch SD CRT: A 19 inch SD CRT could be used for the PRR instead of the specially

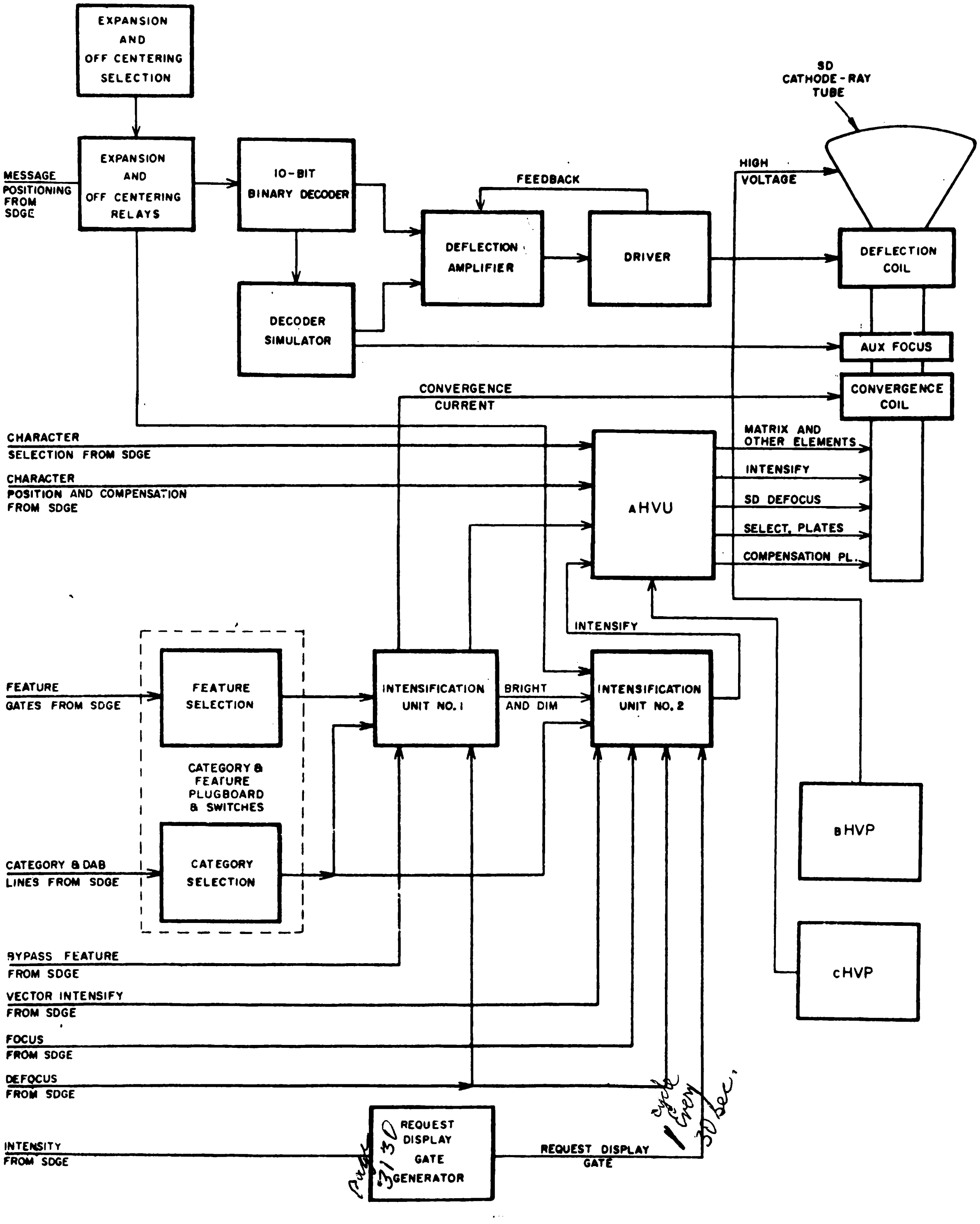

Figure 5–9. SDS Block Diagram

dimensioned 7 inch tube. However, considering the extreme definition needed for the many-diametered enlargement projected on the screen, a 7 inch face plate with an additional electronic refinement such as the auxiliary focus coil would better answer specification needs.

2. The PRR

   a. The PRR consists of a recorder which automatically photographs the situation display onto 35mm film, processes this film at high speed, and then projects the display image on a large screen. These operations take place in a film gate through which the film is moved from one process to another within a period of 30 seconds, the length of time the image is projected. Refer to: component layout on pgs. 2340 through 2400

   b. The PRRE is closely associated with the Command Post console in that it provides Command Post personnel with a large-screen tactical display. For this reason, limited remote-control facilities are located on the ACW panel of the Command Post console.

C. Block Diagram of SDS

1. Only basic circuits that are different from the SDIS circuits will be discussed here. For explanation of other circuits see SDIS section of master lesson plan. NOTE: See Fig 5-9, Page 2320

2. Deflection circuit: Basically the same as SDIS with the exception of limited remote control on expansion. Two levels of remote expansion can be selected from the AC & W desk.

   a. X1
   b. A pre-selected scale

3. Intensification Circuit: Request display gate generator. Allows intensification to one display cycle during each camera cycle (30 seconds.) Controlled by start TD pulses

4. Category Selection: Can be controlled remotely by switches on AC&W desk. CAT switches on main PRRE frame must be on and remote Cat switch "ON".

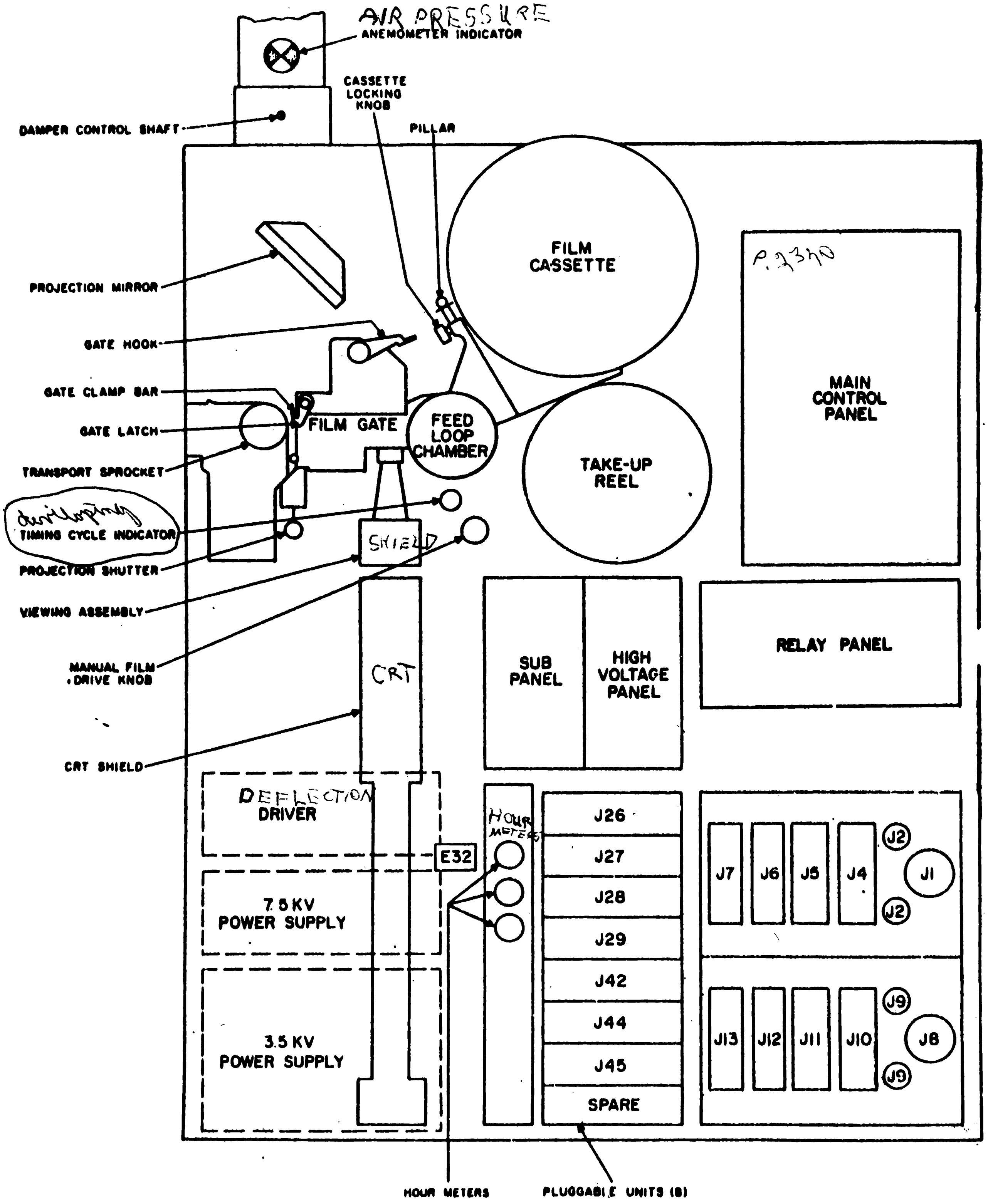

PROJECTOR CONSOLE, FRONT VIEW

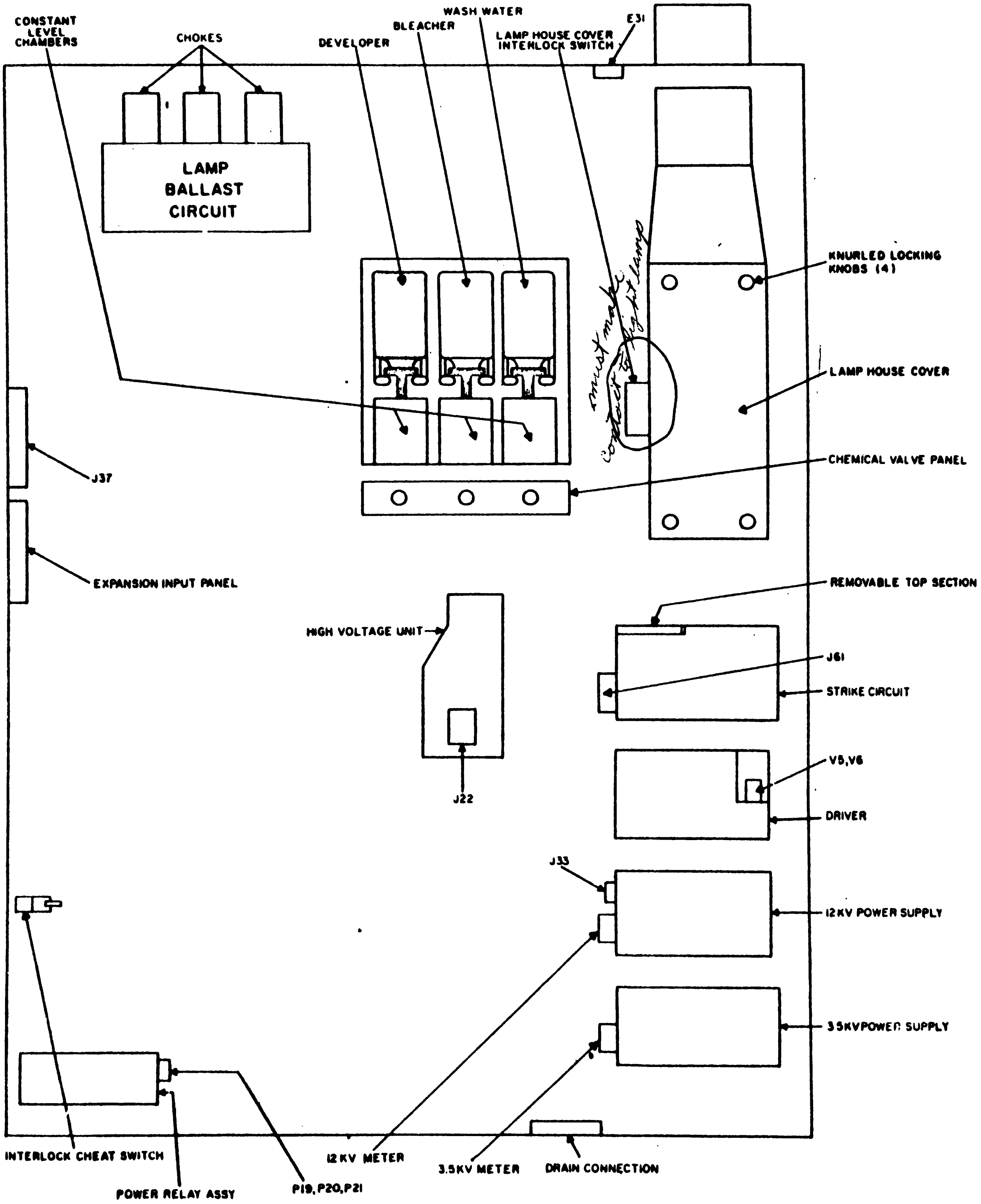

must make contact to light lamp

PROJECTOR CONSOLE, REAR VIEW

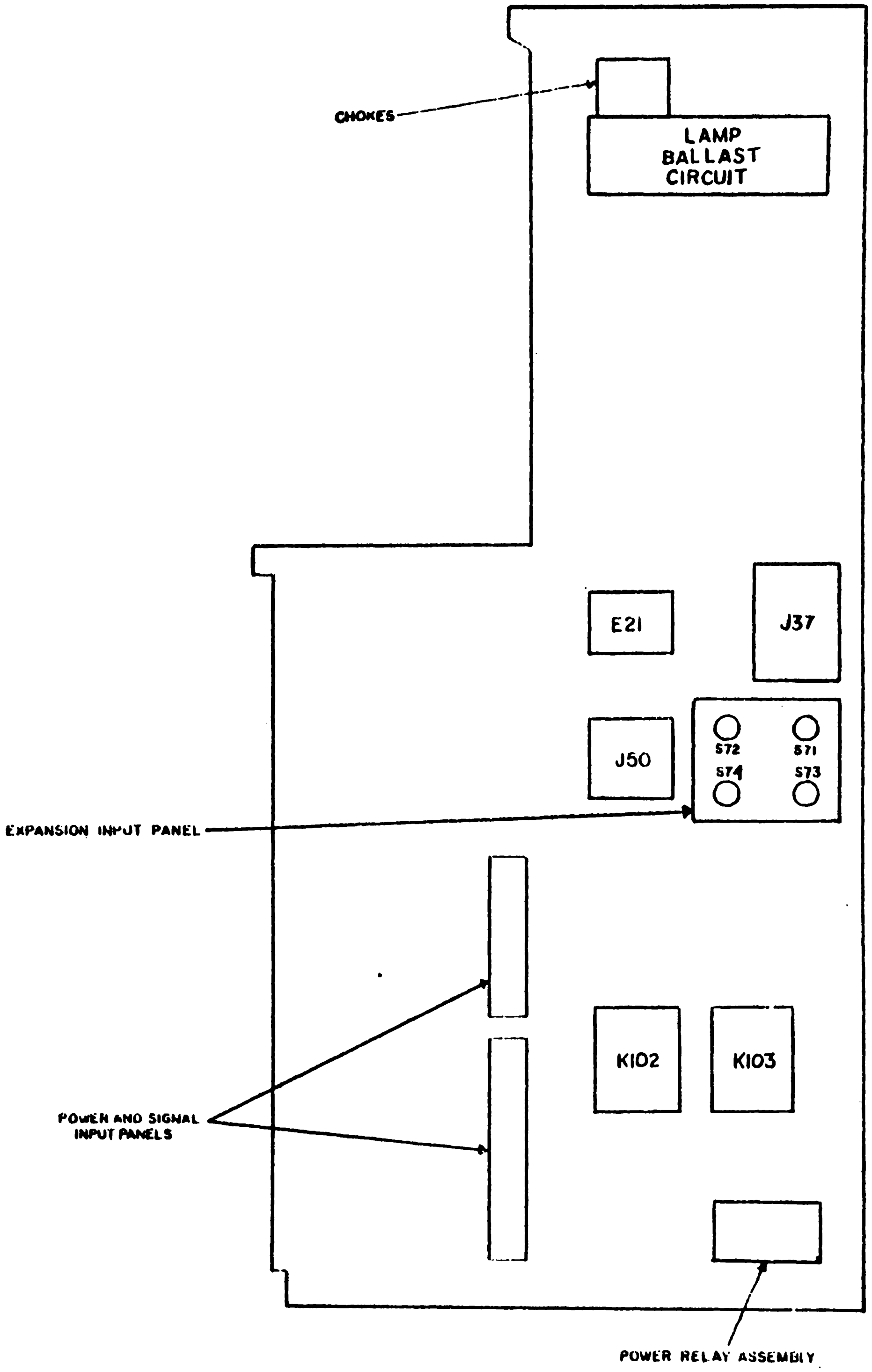

PROJECTOR CONSOLE, END VIEW

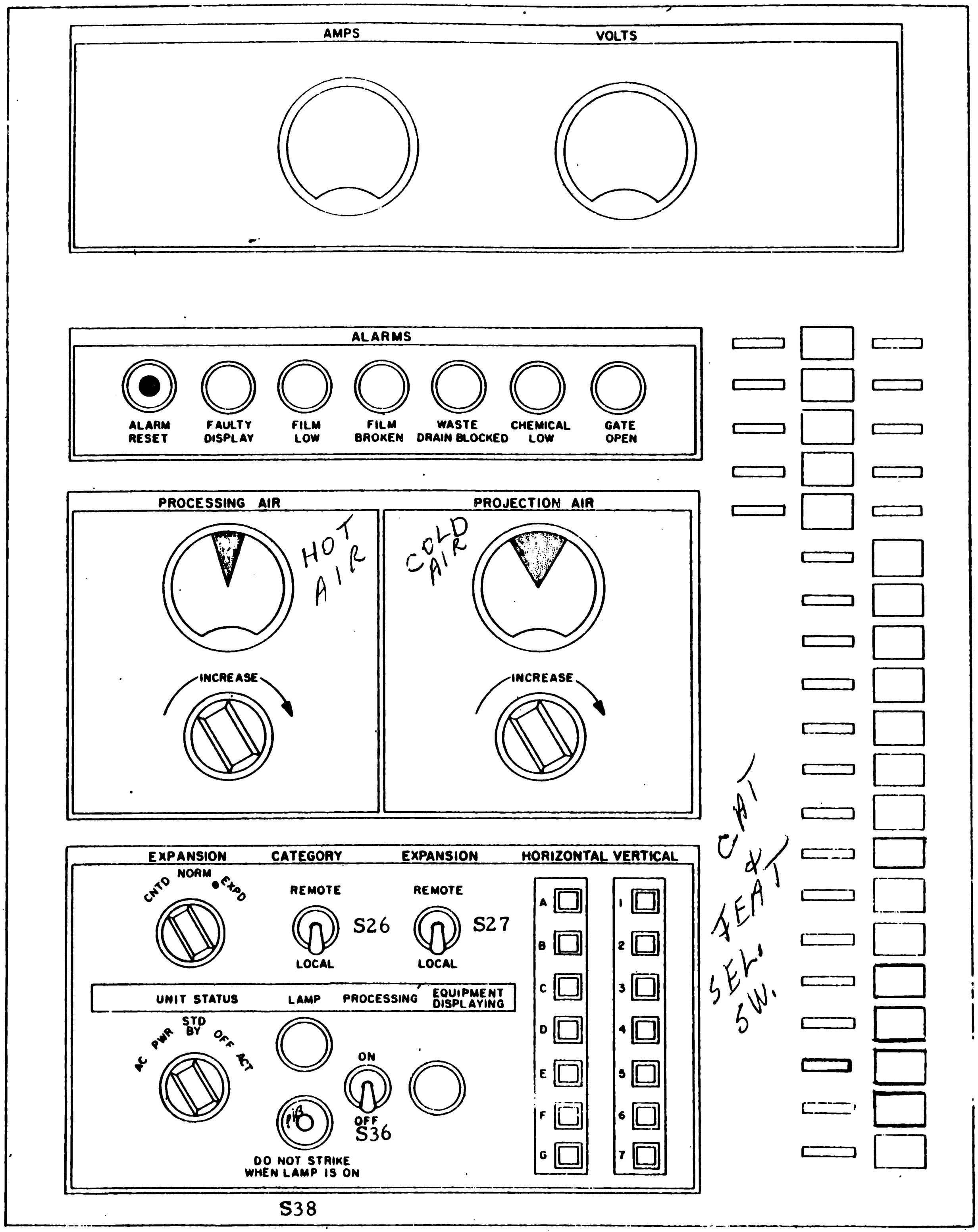

MAIN CONTROL PANEL

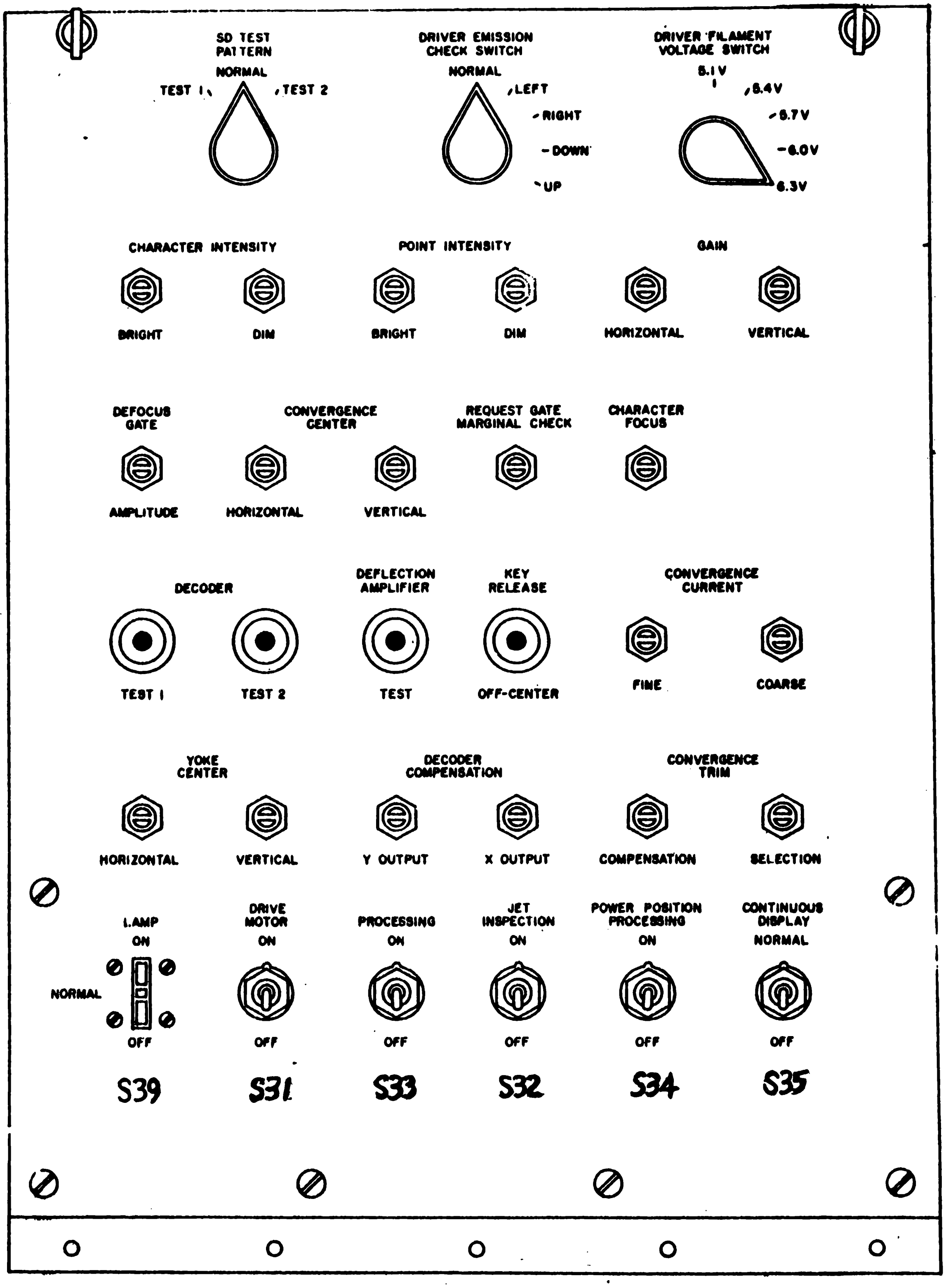
SD TEST PATTERN
NORMAL
TEST 1
TEST 2
DRIVER EMISSION CHECK SWITCH
NORMAL
LEFT
RIGHT
DOWN
UP
DRIVER FILAMENT VOLTAGE SWITCH
5.1 V
5.4V
5.7V
6.0V
6.3V
CHARACTER INTENSITY
BRIGHT
DIM
POINT INTENSITY
BRIGHT
DIM
GAIN
HORIZONTAL
VERTICAL
DEFOCUS GATE
AMPLITUDE
CONVERGENCE CENTER
HORIZONTAL
VERTICAL
REQUEST GATE MARGINAL CHECK
CHARACTER FOCUS
DECODER
TEST 1
TEST 2
DEFLECTION AMPLIFIER
TEST
KEY RELEASE
OFF-CENTER
CONVERGENCE CURRENT
FINE
COARSE
YOKE CENTER
HORIZONTAL
VERTICAL
DECODER COMPENSATION
Y OUTPUT
X OUTPUT
CONVERGENCE TRIM
COMPENSATION
SELECTION
LAMP
ON
NORMAL
OFF
S39
DRIVE MOTOR
ON
OFF
S31
PROCESSING
ON
OFF
S33
JET INSPECTION
ON
OFF
S32
POWER POSITION PROCESSING
ON
OFF
S34
CONTINUOUS DISPLAY
NORMAL
OFF
S35

SUBPANEL

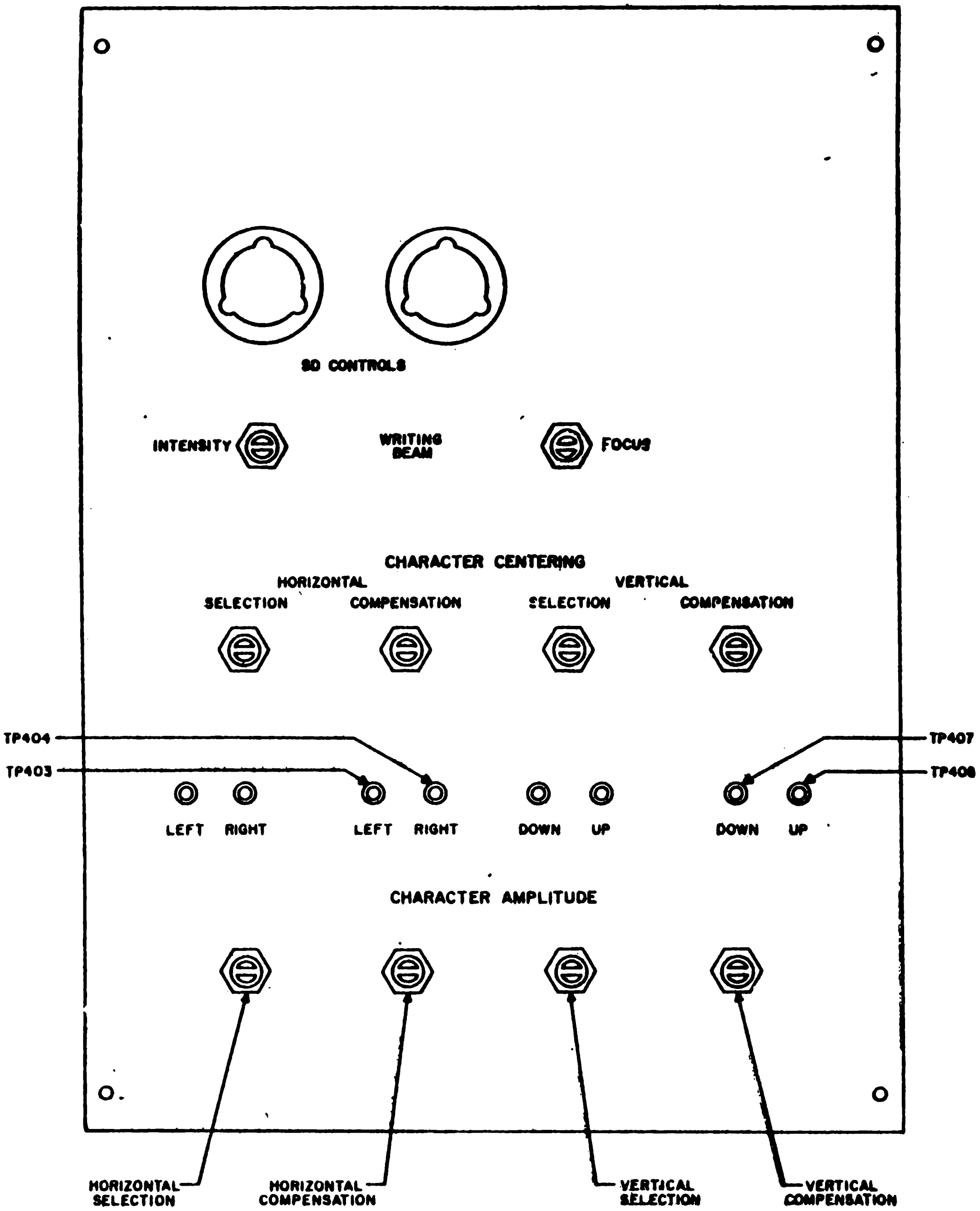

H16A VOLTAGE PANEL

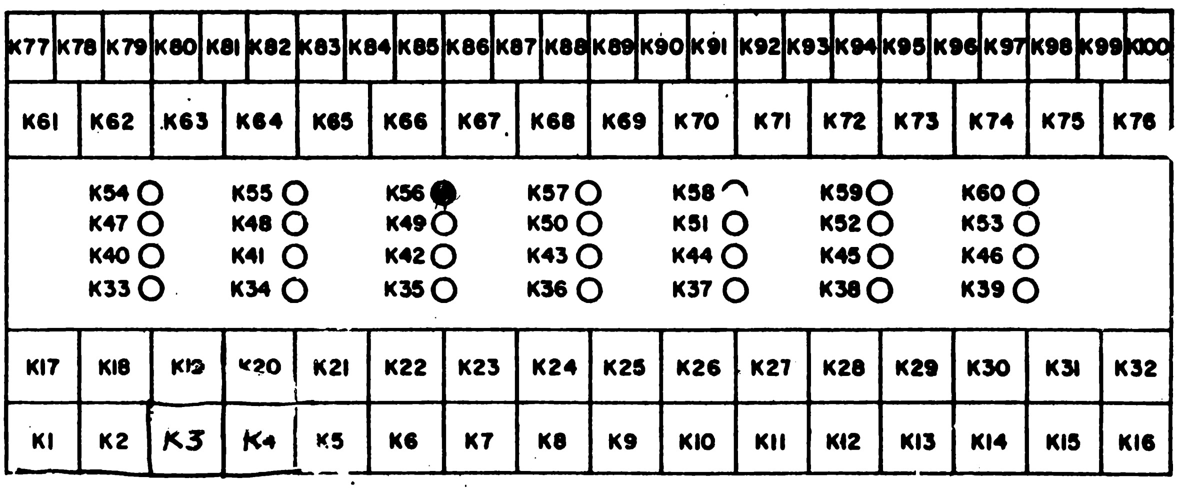
K77
K78
K79
K80
K81
K82
K83
K84
K85
K86
K87
K88
K89
K90
K91
K92
K93
K94
K95
K96
K97
K98
K99
K100
K61
K62
K63
K64
K65
K66
K67
K68
K69
K70
K71
K72
K73
K74
K75
K76
K54
K55
K56
K57
K58
K59
K60
K47
K48
K49
K50
K51
K52
K53
K40
K41
K42
K43
K44
K45
K46
K33
K34
K35
K36
K37
K38
K39
K17
K18
K19
K20
K21
K22
K23
K24
K25
K26
K27
K28
K29
K30
K31
K32
K1
K2
K3
K4
K5
K6
K7
K8
K9
K10
K11
K12
K13
K14
K15
K16

RELAY PANEL

5. 7 Inch SD CRT:

   a. Explained in detail on page 0390
   b. Basic differences:

      1) Auxiliary focus coil
      2) Electrical controlled convergence coil field
      3) Size of tube 7 inches.

D. Detail Circuit Analysis of SDS:

1. Unit Status Switch

   a. The unit status switch is located in the lower left corner of the main control panel of the PRR console. Just as in the other simplex units, the unit status switch, with its power and signal relays, is used to select the proper power and signals for use by the PRR console. Figure 5-17 is a simplified schematic of the unit status switch with the coils of the power and signal relays.

      NOTE:
      Fig. 5-17
      Page 2430

   b. One portion of the unit status switch supplies -48 volts to the request display gate generator.

      NOTE: For detailed power up sequence see DDIE master lesson plan.

   c. The power source to the recorder-reproducer section is controlled by relay K59, K102, and K103. With either set as these relays (as shown in figure 5-17) energized, the desired ac and dc voltages are fed to the recorder-reproducer section so that it may operate.

2. Intensification Circuits

   a. Most of the SDIS's in the SDIE have the intensity gate signal from the SDGE going directly to intensification unit 2, (see fig. 4-21) This signal, after it has been modified by intensification unit 2, is used to intensify the CRT to give the desired tactical display. Each time the information for the display is available (about every 2.6 seconds) the intensity signal is sent from the SDGE. However, in the PRRE, the tactical display is not intensified each time the

      NOTE:
      Fig. 4-21
      Page 0850

information is available because each frame of film used is exposed to the face of the 7 inch SD CRT for about 30 seconds. During these 30 seconds, about 11 displays would be undesirable because the resulting photographs would be blurred. To eliminate the blurring, only one display is intensified for each frame of film.

b. Only one intensity gate signal from the SDGE goes to intensification unit 2 to intensify each frame of film. Limiting the intensity signal is done by inserting a request display gate generator in the intensity signal line that goes to intensification unit 2 from the SDGE. (See fig. 5-18) In formal operation, this generator uses an input from the film mechanism to gate only one frame of film. This gated signal from the generator is called the request display gate signal, and it is used by intensification unit 2 in the same way as an intensity signal from the SDGE.

NOTE:
Fig. 5-18
Page 2440

c. In normal operation, the display gate generator goes through a cycle of operation for each new frame of film that is exposed to the CRT. The cycle is controlled by the same cam timing circuit that controls the movement of the film. During each cycle, the generator produces a request display gate signal. This signal lasts as long as the intensify gate signal received from the SDGE. Besides normal operation, the request gate display generator can be set to one of two types of maintenance operations. During one maintenance operation, no tactical displays are intensified, and during the other maintenance operation all tactical displays are intensified. Figure 5-19 is a logic diagram of the request display gate generator . The type of generator operation, normal or maintenance, is determined by the four relay contacts shown in the figure.

NOTE:
Fig. 5-19
Page 2450

d. For normal operation, K51 and K80 are energized and K53 is periodically energized and de-energized by a switch in the cam circuit. Initially, during normal operation, K 51 and K80 are energized about a minute

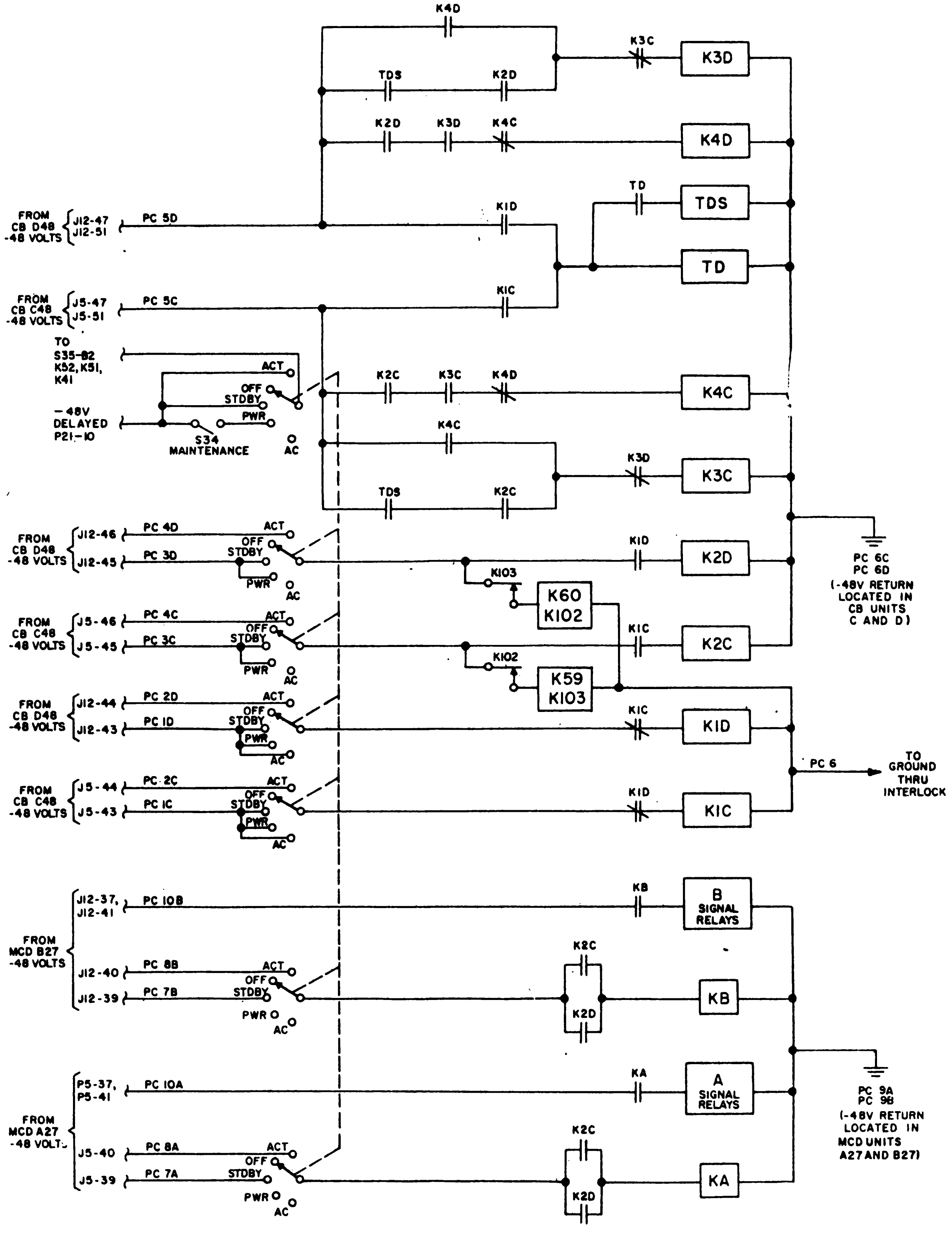

Figure 5—17. Unit Status Switch, Diagram

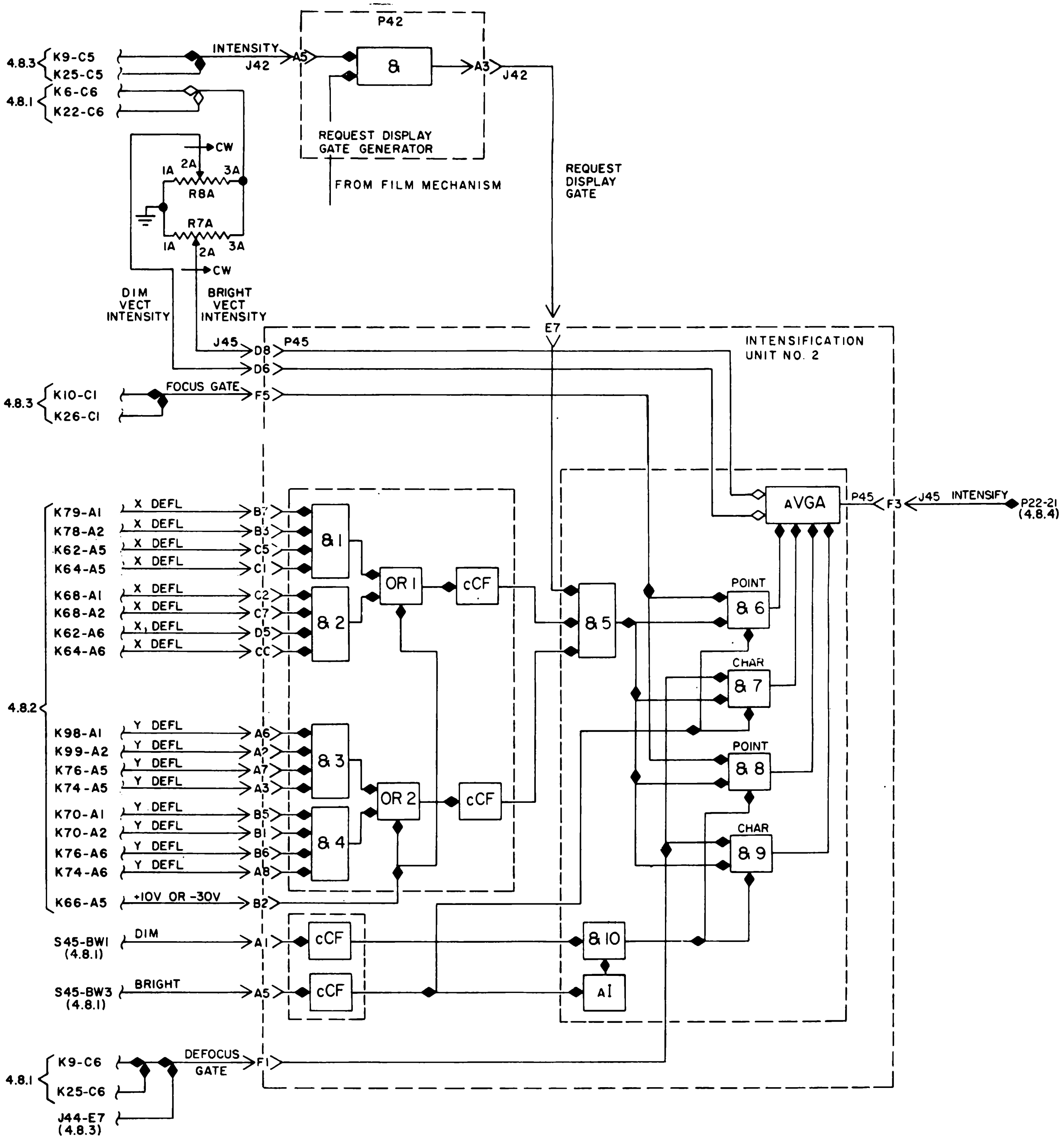

Figure 5–18. PRRE Intensification Unit 2

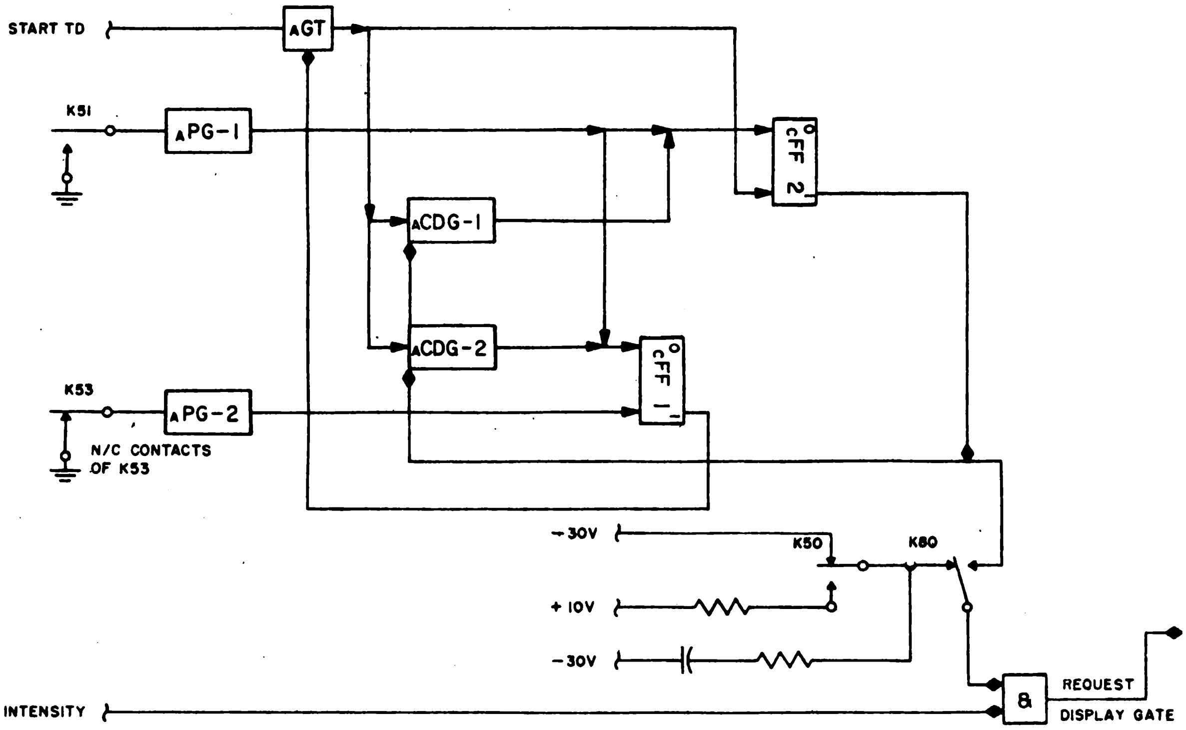

Figure 5—19. Request Disp^lay. Gate Generator

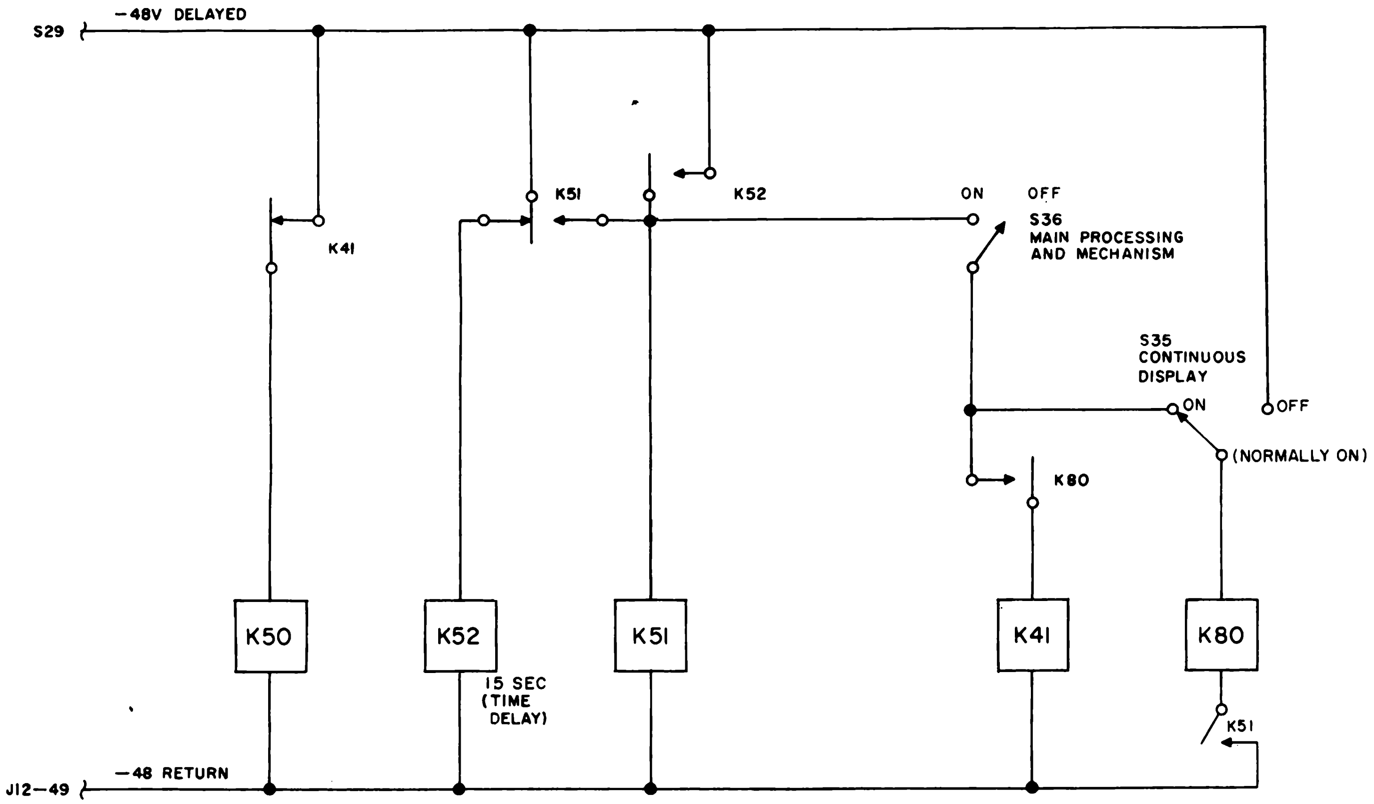

Figure 5–20. Request Display Gate Generator Relay Operation

TABLE 5–5. OPERATION OF RELAYS IN REQUEST DISPLAY GATE GENERATOR

GENERATOR OUTPUT	RELAY OPERATION	SWITCH SETTINGS
Normal	K50 not important	
(One SD message intensified for each frame of film)	K51 energized	Unit status ACT, STDBY, or PWR, S36 on*
	K53 energized and de-energized	
	K80 energized	S35 normal or off
No output	K50 not important	
	K51 energized	Unit status ACT, STDBY, or PWR
	K53 de-energized	S36 off
	K80 energized	S35 off
Continuous output	K50 energized	S36 off
(All SD messages intensified)	K51 energized	Unit status ACT, STDBY, or PWR
	K53 not important	
	K80 de-energized	S35 normal

**S36 is in the circuit that turns power on and off for the cam circuit in the PRRS that is used to energize and de-energize K53.*

after the unit status switch is set to STDBY, ACT, or PWR. Relay K51 grounds the input of PG-1, which sends a signal to reset FF1 and FF2. Relay K80 connects one AND input to the 1 output of FF2, and the cam switch energized K53, thus removing the input of PG-2 from ground.

e. When it is time to expose a frame of film to a tactical display (about seven seconds before the frame is changed), the generator cycles starts with the cam switch de-energizing K53. This action grounds the input of PG-2. PG-2 then sends a signal to set FF1. The output of FF1 conditions the gate tube, and the next start TD input pulse goes through the gate tube, to CDG-1 and CDG 2 where it is stopped by FF2. The start TD pulse also goes to set FF2. The output of FF2 now conditions CDG-1 and CDG-2 and is also fed to the AND circuit. The intensity input signal that follows the start TD pulse goes through the AND and out to intensification unit 2 as the request-display gate signal. This signal is used to intensify the SD CRT for the one tactical display that is used to expose the frame of film.

f. When the next start TD signal comes in (start TD signals and intensify signals follow one another) it goes through the conditioned gate tube to FF2 where it does nothing because FF2 is already set. This signal from the gate tube also goes through conditioned CDG-1 and CDG-2 to reset FF1 and FF2. The intensity signals that now occur do not go through the AND because it is not conditioned by FF2 and, therefore, no SD messages are intensified until the next generator operation cycle. When the next frame of film is moved into position for exposure to one SD message, K53 is energized by the cam switch. The next generator operation cycle starts when K53 is de-energized.

For one type of maintenance operation, K51 and K80 are energized, but K53 remains de-energized. Without K53 opening and closing, the generator operation cycle will not start; therefore, no SD messages will be intensified because no request-display gate signals are generated.

g. For the other type of maintenance operation, K50 is energized and K80 is de-energized. The contacts of the relays connect /10 volts to the AND to condition it. Thus, whenever the intensity signal enters the AND, it will be sent out as a request-display gate signal. The continuous generation of this signal will intensify the 7 inch SD CRT for every SD message.

h. The setting of the relays in the generator is controlled by the setting of the unit status switch, the processing switch (S36) located on the main control panel, and the continuous display switch (S35) located on the subpanel.

i. Figure 5-20 shows the relay circuits with both S35 and S36. With the unit status switch set to ACT, STDBY, or PWR, this circuit receives the -48 volt delayed power. When this occurs, time delay relay K52 is energized, and after 15 seconds the contacts of K52 close to energize K51. The closed contacts of K51 keep K51 energized and, at the same time, de-energize K52. K51 remains energized until the power to the circuit is turned off.

NOTE:
Fig. 5-20
Page 2460

j. The operation of the other relays is not determined by setting switches S35 and S36. Table 5-5 lists the request-display gate generator outputs for all three types of generator operation. Behind each type of output is listed the relay operation needed to get the desired output (operation of some relays for the outputs is not important). The switch and its setting to get the proper relay operation are listed behind each relay. For example, to get a normal output from the generator, the operation of K50 is not important because its contacts do not enter into the generator operation at this time. (See fig. 5-19)

NOTE:
Table 5-5,
Page 2460

Relay K51 is energized by the unit status switch at ACT, STDBY, or PWR. Relay K53 is energized and de-energized because S36 is set to ON to feed power to the cam circuit. Relay K80 is energized regardless of the position in which S35 is set.

3. Message Positioning Circuits: The method used for positioning is the same in the SDS as in the SDIS. To prepare the SDS console for display of certain areas within the air defense sector, rotary switches are used and perform the same way as in the SDIS.

NOTE. For detailed explanation on rotary switches, see expansion section of SD Console.

4. Remote Control Circuits

   a. The PRR can be operated locally at the PRR or remotely (to a limited degree) at the Command Post console. The PRR operator has complete control when category switch S26 and expansion switch S27, located at the PRR console, are set to LOCAL. Switching both of these switches to REMOTE, therefore, allows the Aircraft and Warning Officer at the Command Post console to assume limited control of the PRR.

   b. There are 20 pushbuttons located at one desk section of the Command Post console that are used for remote control of the photographic recorder-reproducer element (PRRE). These pushbuttons give the command staff some control over the display projected on the screen. Of the 20 pushbuttons, a maximum of 15 are labeled and used to select various combinations of display categories. One is labeled X1 and is used for contracted display. Another labeled OPERATOR is used to signal the operator in the projection room when there is trouble or faulty display. Three pushbuttons are spares.

   c. 10C-PB (Pushbutton) Module: The 20 pushbuttons are located in two 10C-PB modules (fig. 5-22). This type of module contains 10 pushbuttons, with each button having independent push-to-make and push-to-break action. When the button is depressed

NOTE:
Fig. 5-22
Page 2510

to the ON position and the finger is removed, the button will not release. To release the button, the button must be pushed beyond the ON position. Since there is no release solenoid, the REL button is inactive. Furthermore, since these buttons are independently released, more than one button in a module may be depressed at any one time.

d. Remote Control Operation

NOTE: Fig. 5-23, Page 2510

1) K39 energized when the unit status switch of the AC&W desk is on power, active, or standby.
2) K49 energized by the AC&W desk to indicate an alarm.
3) Remote category control.

    a) S26 must be on remote to pick K42.
    b) K42 allows 1-15 pushbutton on the AC&W desk to pick K83 to K97.
    c) K83 to K97 deselect categories. Provided all CAT switched are in left or right position.
    d) K81 and K82 are necessary because a number of categories are expansion dependent.

        1) K82 picked by remote/local expansion sw S27.
        2) K81 picked by S27 and (X1) pushbutton on AC&W desk.

NOTE: Fig. Category patching. Page 2520 for results of K83- K97 and K81 and K82.

. Remote Expansion Control

1) S27 must be on "remote" to pick K55-K58, K82.
2) Disables local operation by disconnecting expansion switches.
3) Enables remote operation by connecting plugboard.
4) Hubs in column B are hot (K36, 37, 38 not picked).
5) Hubs in column B are patched for X2 centered display (Pick Bx, Dx, and By, Dy)
6) Push X1 pushbutton at AC&W desk.
7) Pick K36, 37, 38, and 81.
8) Hubs in column A are hot.

NOTE: Fig: Expansion patching on page 2530 for example showing relays K55-K58 disconnecting expansion switches

NOTE: Plugboard must be patched to accomplish this. See fig. on pg. 2540 & 2550 category plugboard

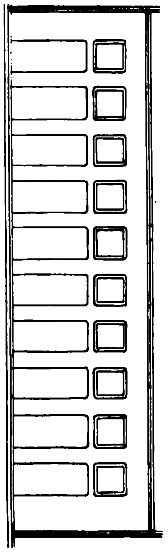

Figure 5–22. 10C-PB Module with Labels

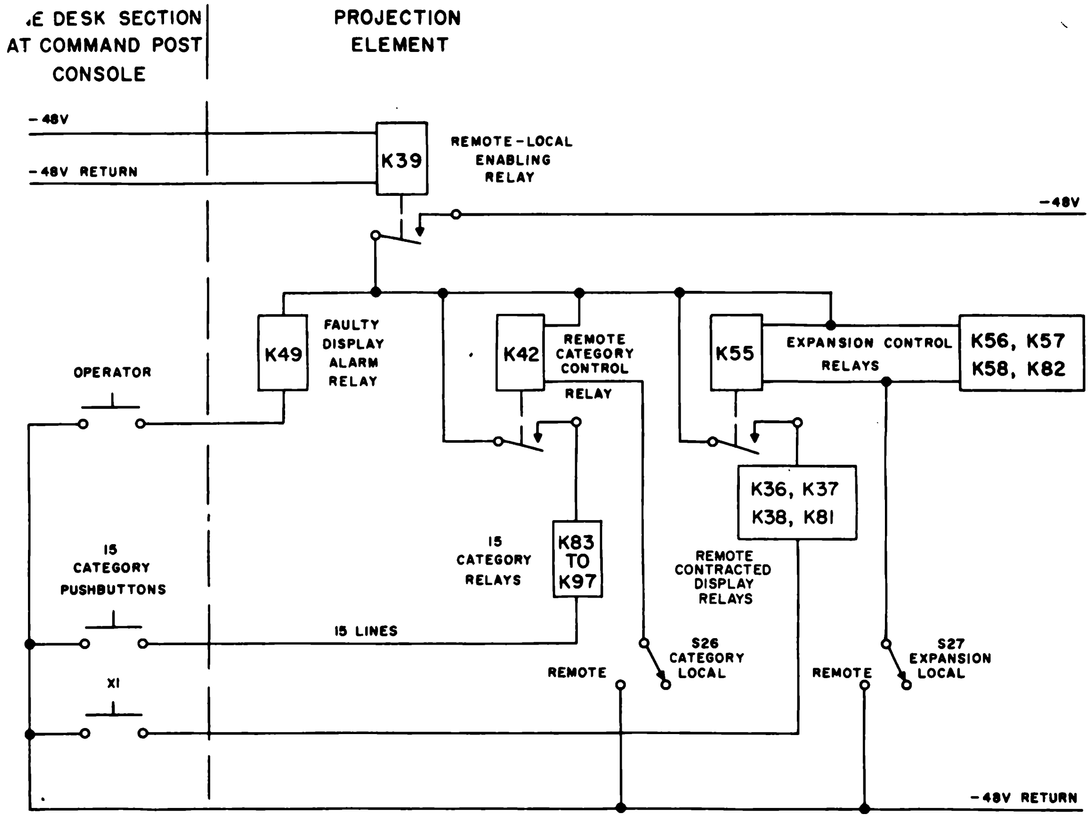

Figure 5–23. Remote Control of Projection Element, Simplified Diagram

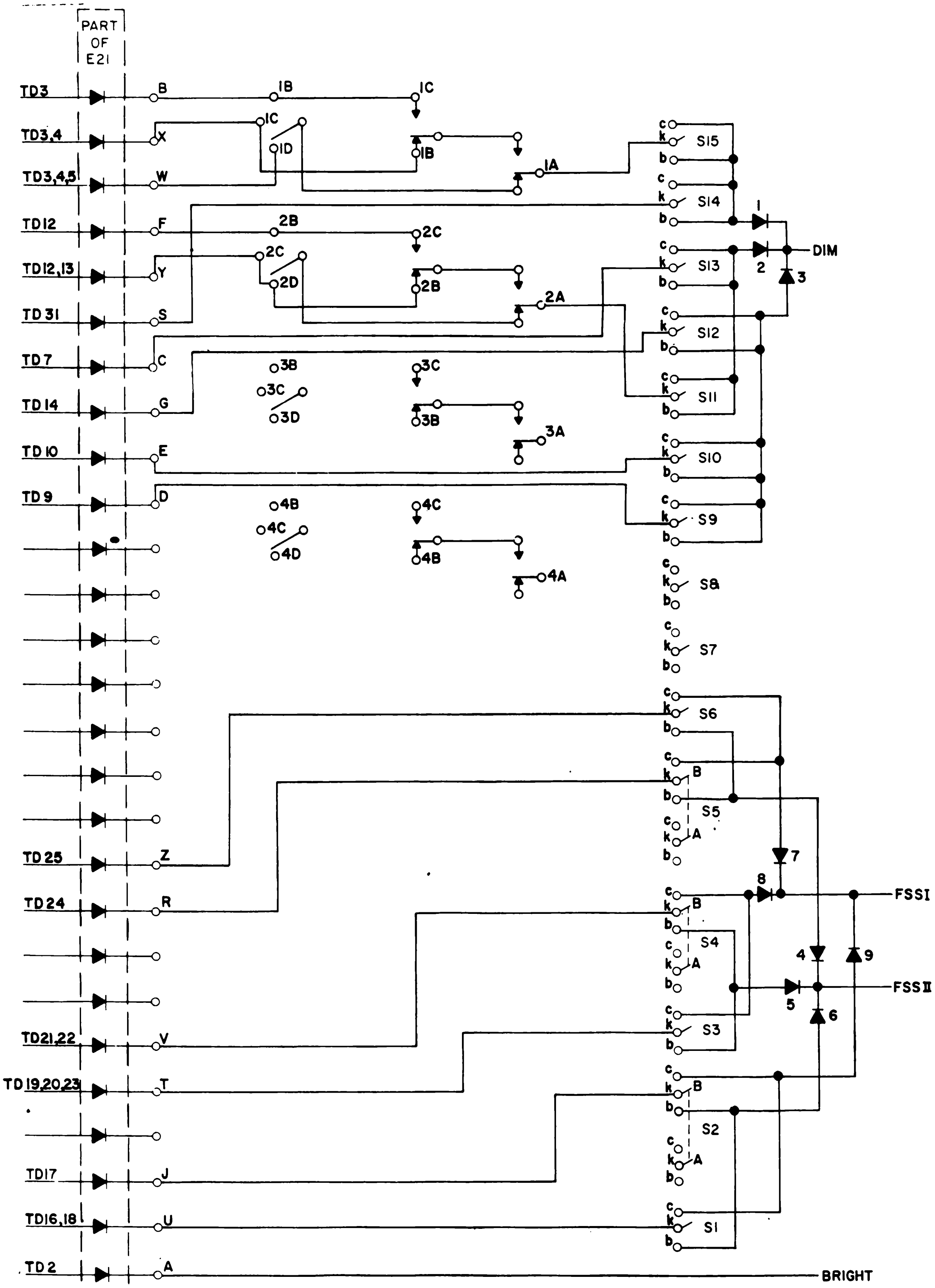

PRRE Category Patching Diagram

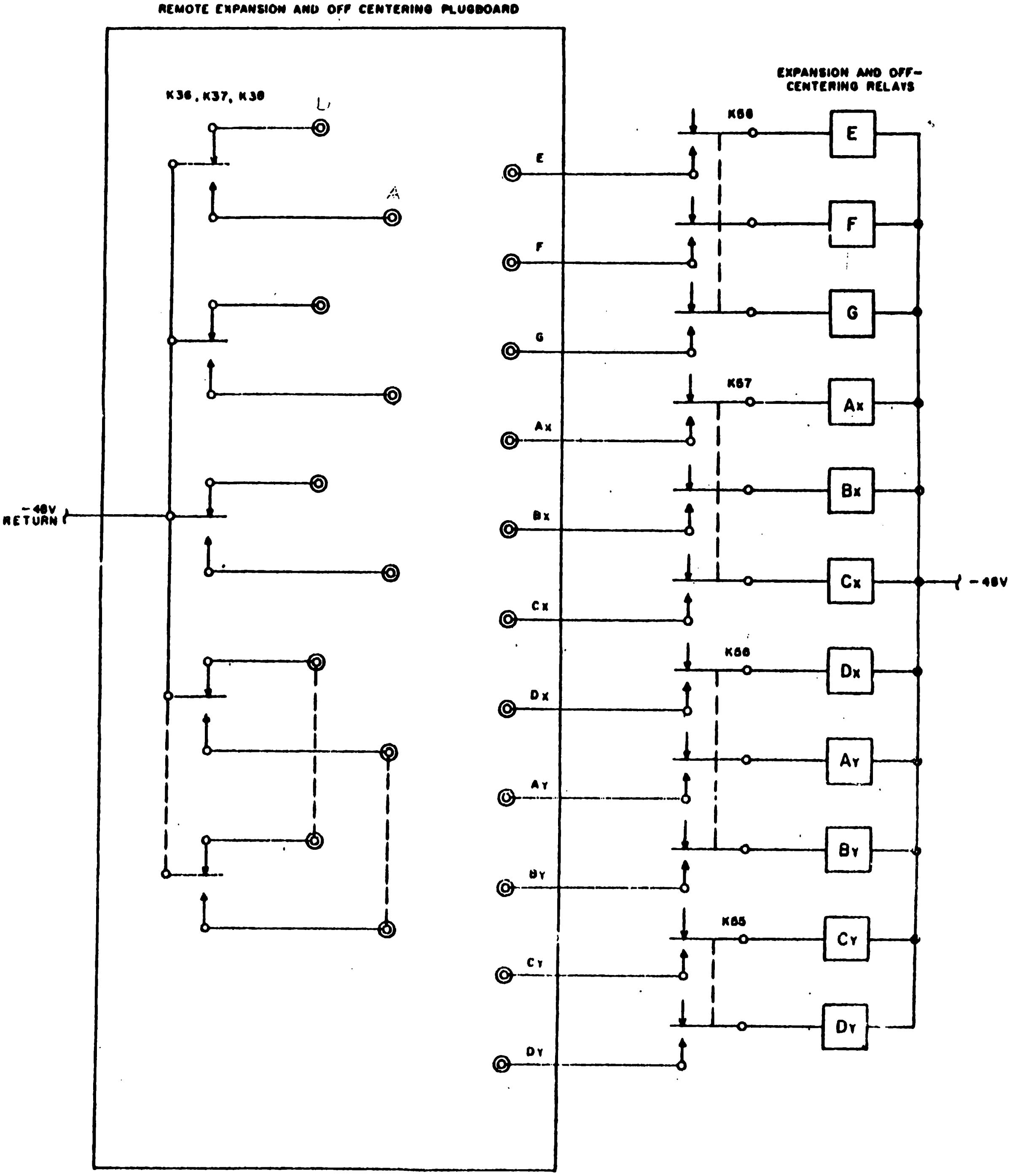

TITLE:

KELVIN - HUGHES EXPANSION PATCHING

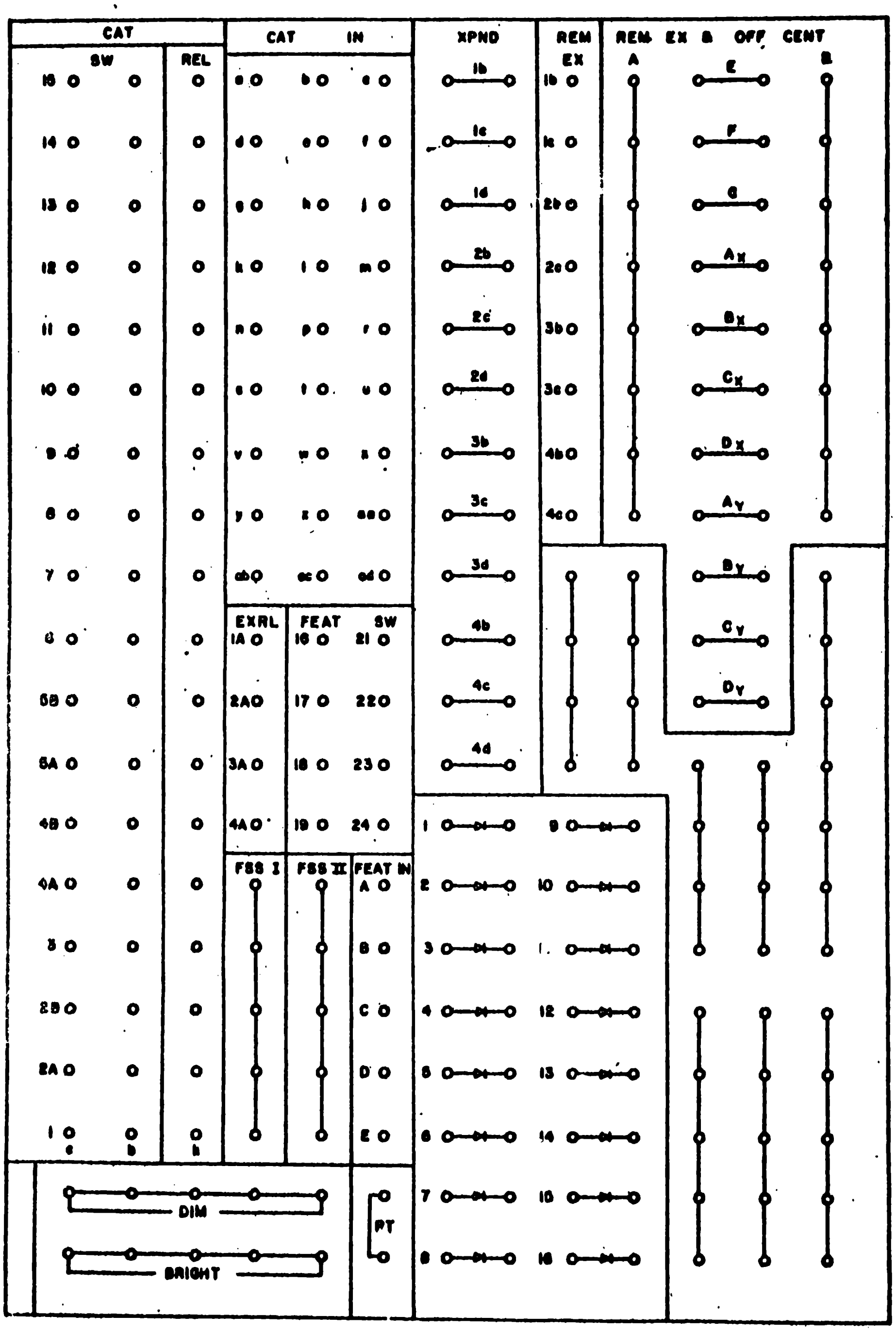

TITLE: KELVIN - HUGHES CATEGORY PLUGBOARD

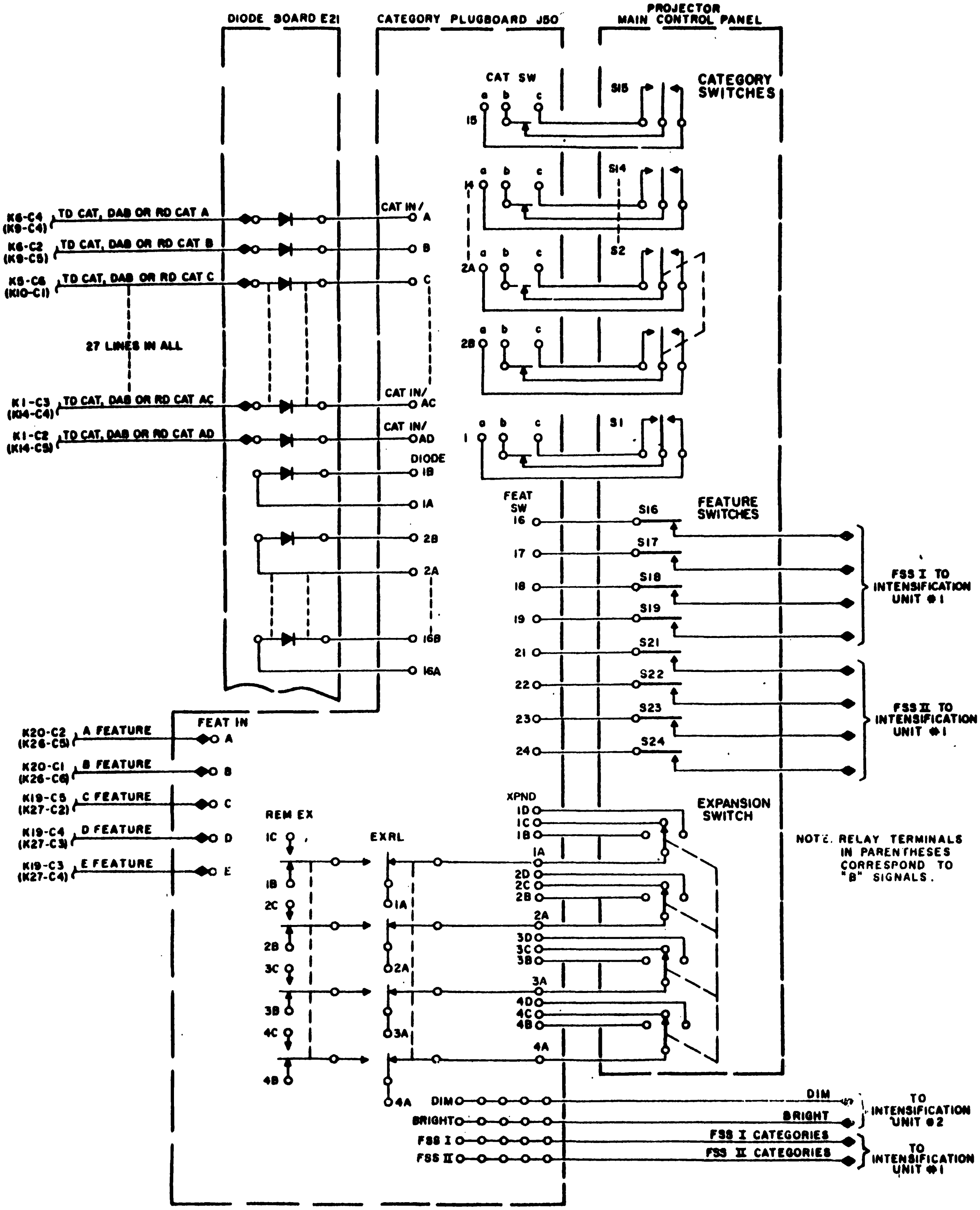

NOTE. RELAY TERMINALS IN PARENTHESES CORRESPOND TO "B" SIGNALS.

PLUGBOARD SCHEMATIC

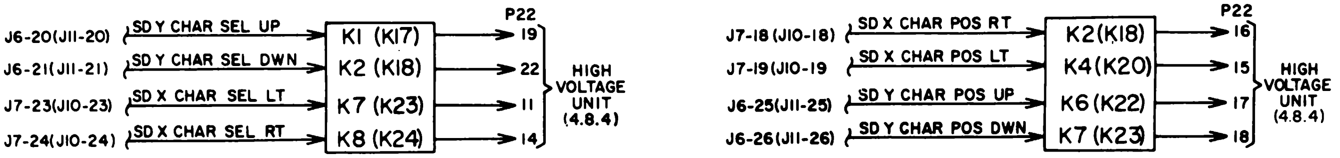

A. CHARACTER SELECTION SIGNALS

B. CHARACTER POSITION SIGNALS

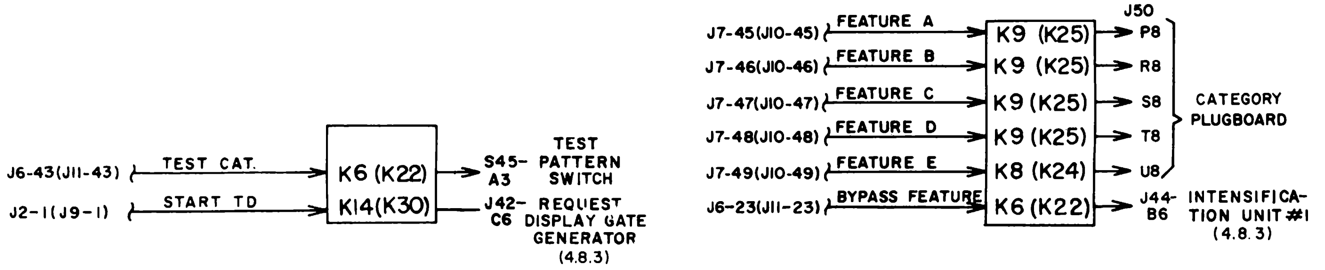

C. TEST CAT. AND START TD

D. FEATURE GATES

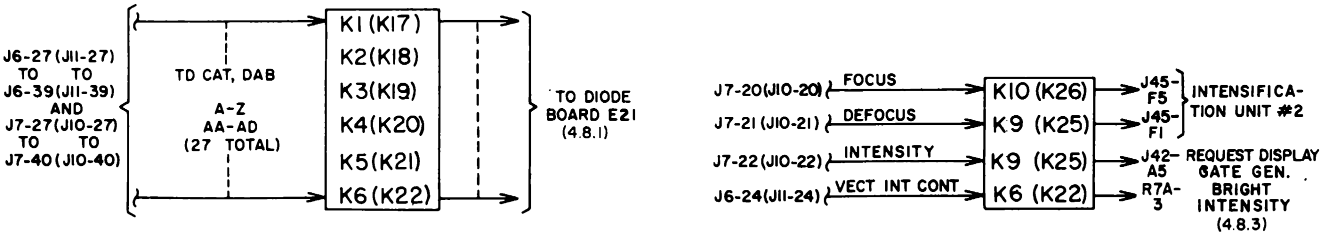

E. DISPLAY SELECTION SIGNALS

F. INTENSIFICATION GATES

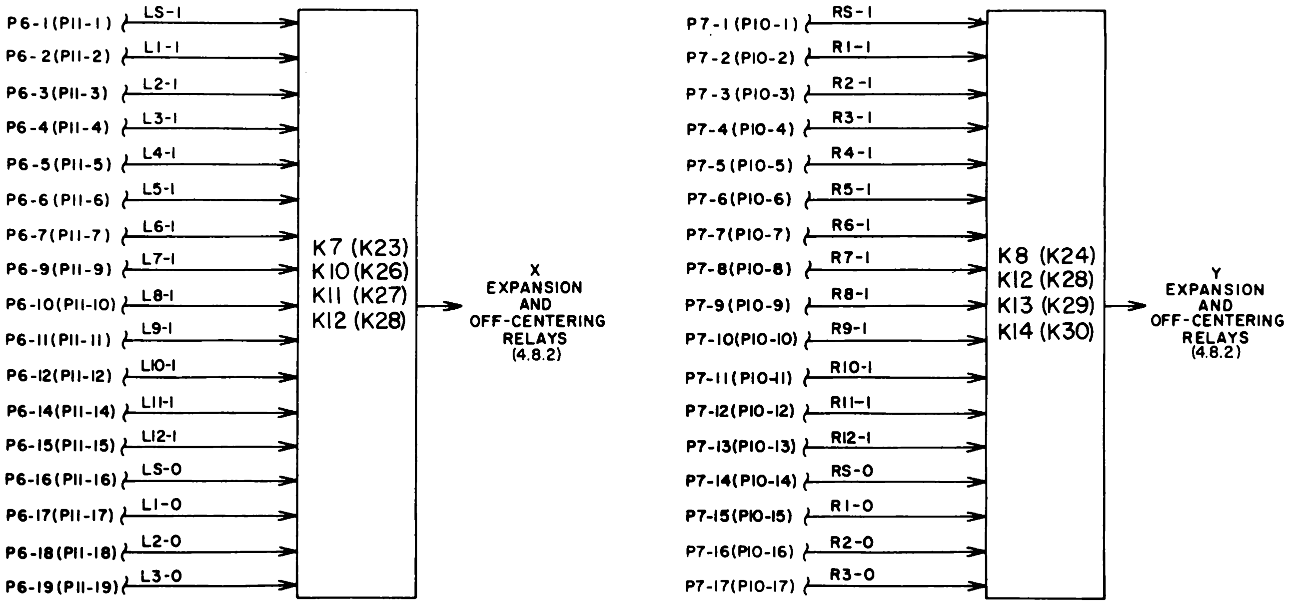

G. MESSAGE POSITIONING SIGNALS

NOTE: CONNECTOR PINS AND RELAYS SHOWN IN PARENTHESES APPLY TO "B" SIGNALS.

SIGNAL RELAYS, BLOCK DIAGRAM

9) Hubs in column A are patched for X1 display (Pick E relays)

NOTE: Fig. on pg. 2590
Refer to Page 2580

5. Subpanel Controls: The PRR console subpanel contains the necessary controls to adjust both the SDS and the PRR. The following list describes the controls used for the SDS:

   a. SD Test Pattern: A3 position switch which allows normal console operation only in normal position. When in either of the test positions, only the test category is displayed, while all other categories are disconnected. In addition, the X1 expansion is selected for display. In Test 1 position, the feature selection switches in FSS 1 are operative: when in Test 2 position, the feature selection switches in group 2 are operative.
   b. Driver Filament Voltage Switch: Reduces the filament voltage applied to all four driver unit tubes, testing the tubes for low emission.
   c. Bright and Dim Character Intensity: Vary the intensity of the bright characters and the dim characters, respectively.
   d. Bright and Dim Point Intensity: Adjust the intensification levels for bright and dim points respectively.
   e. Horizontal and Vertical Gain: Vary the width and height of the display area on the 7 inch SD CRT. By varying the gain of the deflection amplifier, the display is made to fit within the inscribed square on the face of the 7 inch SD CRT.
   f. Defocus Gate Amplitude: Adjusts the evenness of illumination of bright characters. This adjustment is made by observing a test pattern and adjusting by eye.
   g. Horizontal and Vertical Convergence Center: Adjusted for electronic center rather than mechanical center of the convergence field.
   h. Character Focus: Adjusts character size and clarity.
   i. Off-Center Key Release: Energizes a solenoid that releases the off-centering keys on the front panel in case they are depressed.
   j. Fine and Course Convergence Current: Adjusted for the sharpest character register as viewed on the screen of the 7 inch SD CRT.

k. Horizontal and Vertical Coil Center: Used to secure centering of the electron Beam.

l. "Y" OUTPUT and "X" OUTPUT - DECODER COMPENSATION : Used for balancing the decoder output.

m. COMPENSATION and SELECTION-CONVERGENCE TRIM: Provide fine adjustment of character register and format.

n. Marginal Check - Lower filament voltage on all tubes except deflection drivers, SD CRT. Checkout producer in PRRE Maintenance Handbook.

o. The remaining controls on the Sub Panel are used in the PRR section and will be discussed later in Lesson Plan.

6. High-Voltage Panel

This panel (fig. 5-5) contains the controls that are part of the SD high-voltage unit. They are all part of the SDS and are described briefly below:

NOTE: Show on equipment or Page 2390

a. WRITING BEAM INTENSITY: Adjusts the overall brightness of the SD display.

b. WRITING BEAM FOCUS: Adjusts the size of the point displays. Reduces a bright point to its optimum size.

c. CHARACTER CENTERING - HORIZONTAL and VERTICAL SELECTION: Adjust for proper selection of columns and rows of characters on the character matrix. Set so that the defocused writing beam is centered on the selected character aperture.

d. CHARACTER CENTERING - HORIZONTAL and VERTICAL COMPENSATION: Adjust horizontal and vertical character registration. Adjusted while viewing a test pattern to reduce the variation in position of different characters displayed sequentially in the same location.

e. CHARACTER AMPLITUDE - LEFT, RIGHT, UP and DOWN: Adjust both the compensation and selection amplitude.

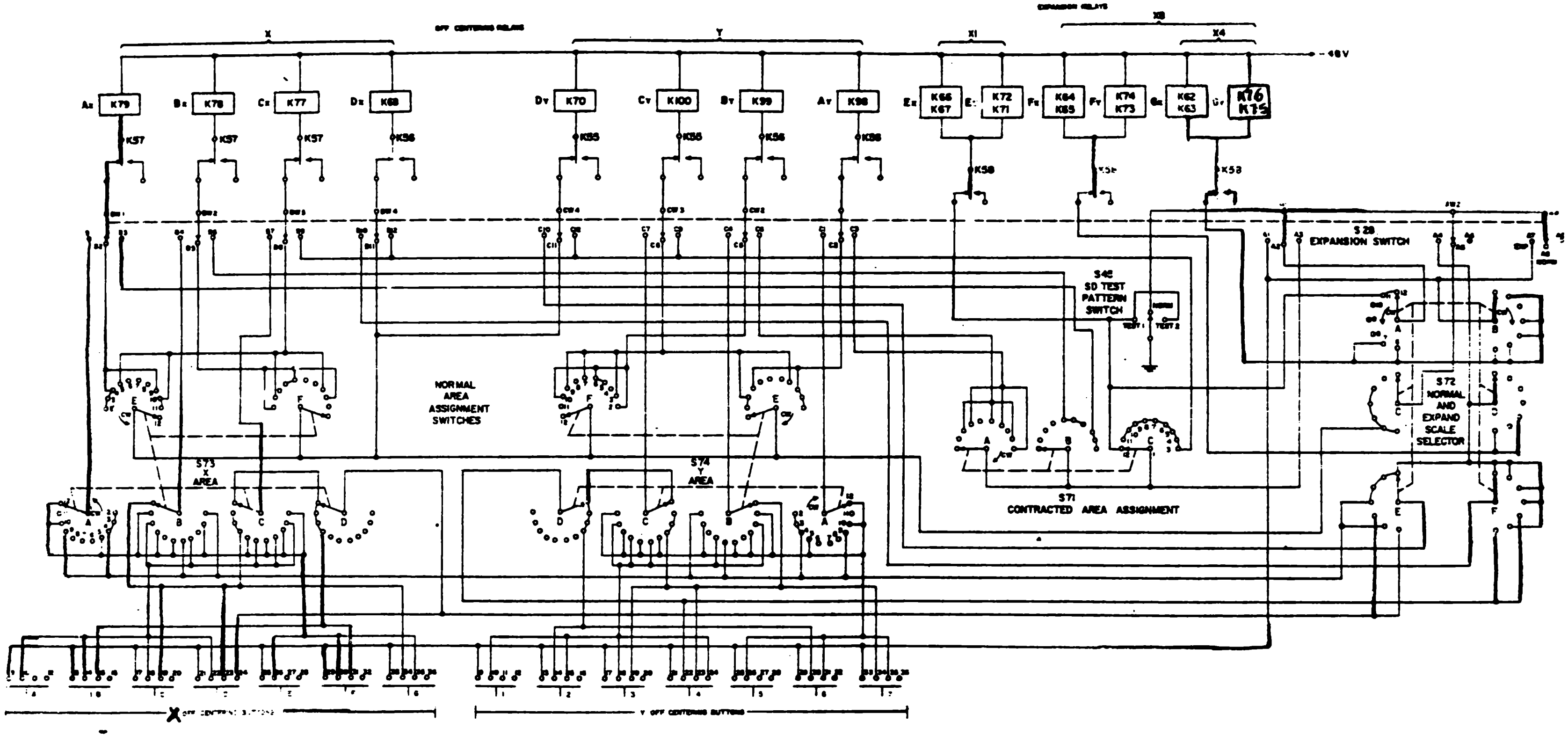

ROTARY SWITCH CIRCUITRY

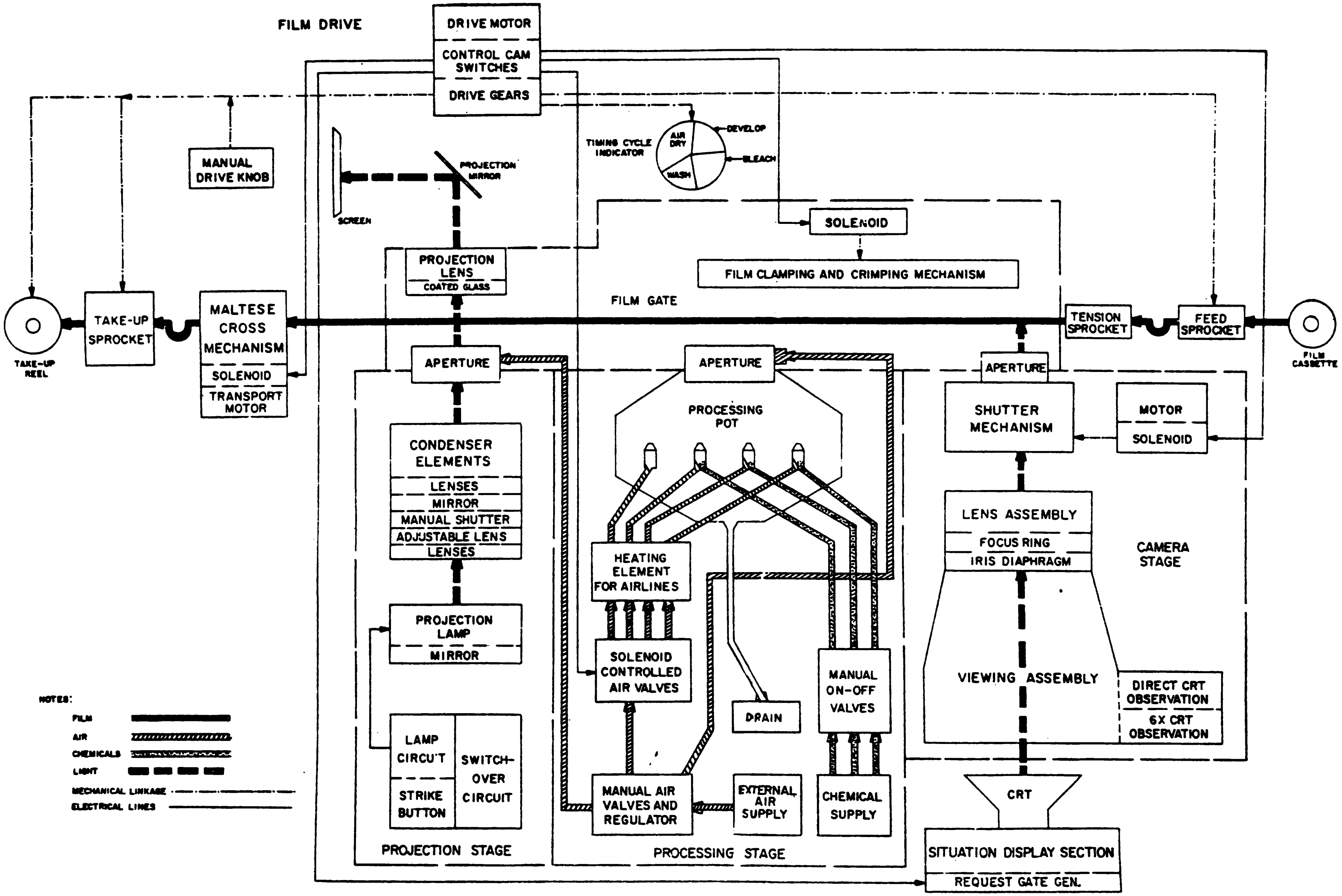

OVERALL BLOCK DIAGRAM

E. Photographic Recorder-Reproducer Section

1. General Information

a. This section of the PRRE consists of a recorder which automatically photographs the sequential information on the face of a 7 inch SD CRT, a rapid film processor, and a reproducer which automatically projects the processed picture onto a large screen in front of the Command Post.

b. The recorder automatically photographs a 6-inch display area of the 7 inch SD CRT as a 0. 800-inch circle on the 35 mm film frame. The film is then processed automatically by the time-and temperature method, without manual intervention. In the proper sequence, chemicals are mixed with hot air and jet-sprayed onto the emulsion side of the film. Separate ventur-type jets are used for each chemical and for air drying the film. Flow control is achieved by a solemoid air valve in each line.

When processing has been completed, the film is transported to the reproducer area of the film gate for projection.

2. Theory of Operation

a. Film loaded on a film magazine travels to a film gate, where it is exposed at a recording section of the gate. The film then moves to the processor section of the gate, where it is developed and fixed. Next, the film moves to the reproducer section of the gate, where it is projected onto the screen. Once projected, the film travels to the takeup reel. The film drive components transport the film from the film magazine through the various sections of the film gate to the take-up reel, as shown in the basic flow diagram of figure 5-25. The film gate is operated electromechanically.

Refer:
Page 2600

NOTE:
Fig. 5-25
Page 2630

b. The film gate assembly is the heart of the PRR. In that small area the end function of the three basic photographic processes takes place: taking the picture, developing the picture, and enlarging the picture by projection.

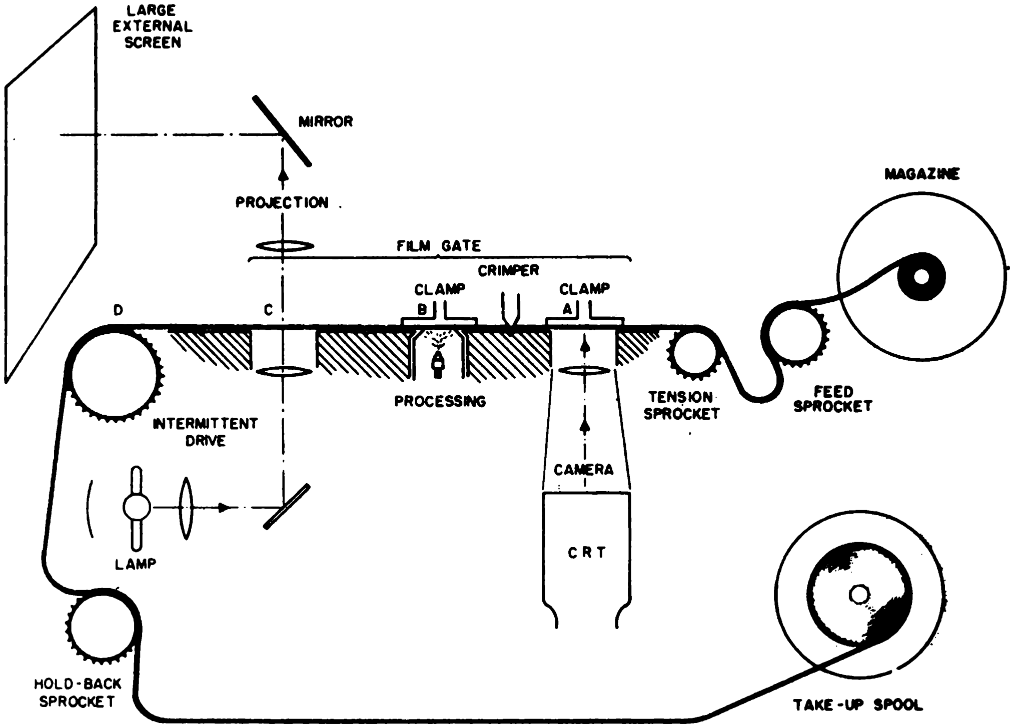

Figure 5–26. Basic Principles of the PRR

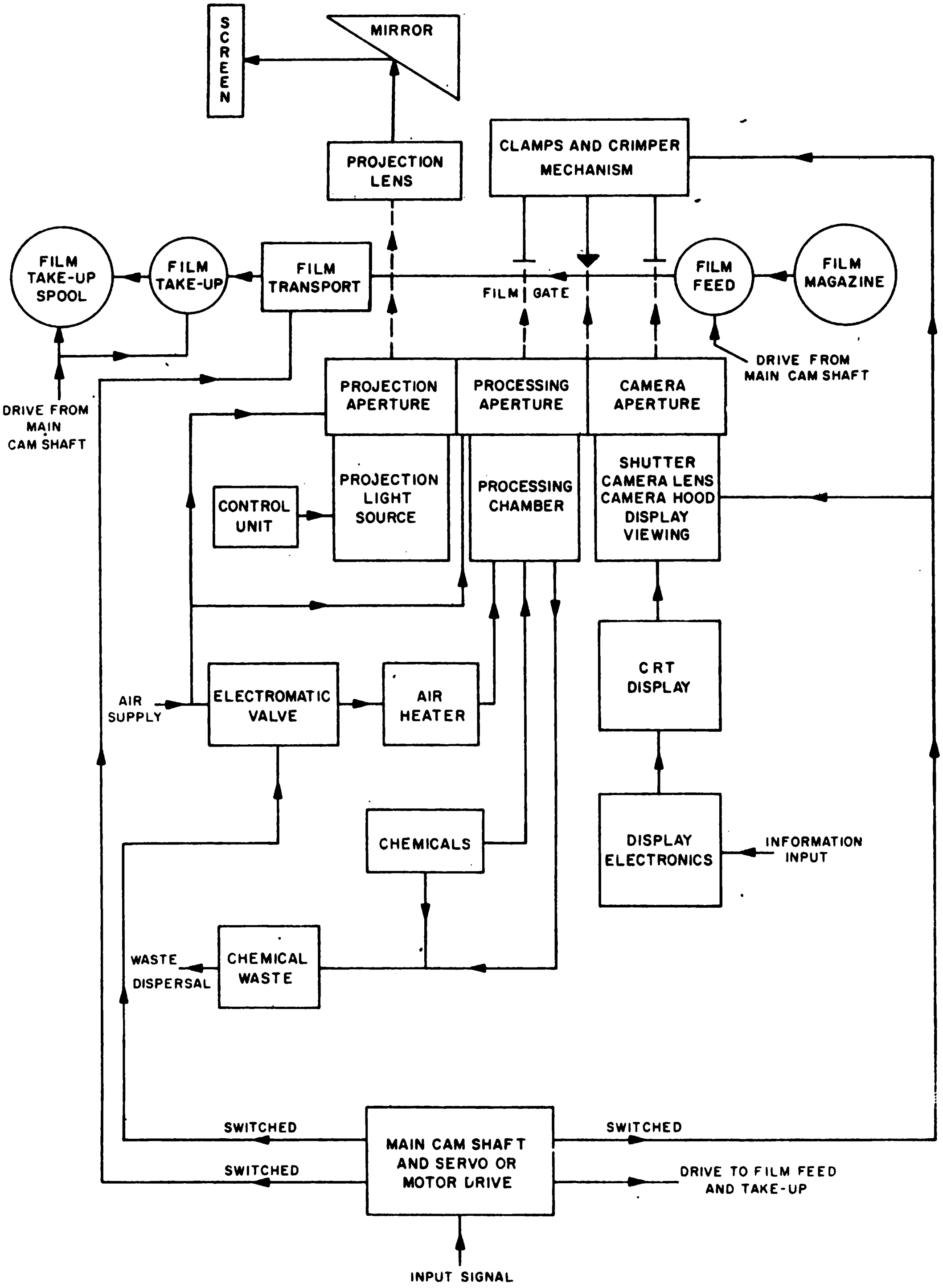

Figure 5—25. Block Schematic of the PRR

c. The film is advanced through the film gate by a film drive assembly, which also positions the cams that control the timing of the recording, processing, and reproducing operations. Fig. 5-26 shows these three operations from right to left. The mechanical linkages move the film from one gate aperture to the next (a distance of 10 film perforations) and also move the timing control cams and the visual timing cycle indicator. The electrical lines control the film mechanism and the timing.

NOTE:
Fig. 5-26
Page 2620

d. The operation up to this time can be considered that of normal photographic equipment, but any device that will expose, process, and project a film display every 30 seconds must have a special, ultra-rapid processing method. The PRR makes use of heated air mixed with the proper chemicals to jet-spray the exposed emulsion. In less than 30 seconds the film frame has been developed, bleached, reversed, washed, and dried, in precisely timed cycles.

e. Reproducing the now fully processed 35 - mm frame by projecting the display image onto a 14 by - 14 - foot screen is accomplished by a unique projection system. The projector employs a high light-output mercury vapor lamp and a complex beam-directing optical system to project the initial 0.800-inch image 35 feet to the large screen area.

3. Recorder

a. The recorder is, in effect, a camera. Light from the SD CRT passes through the recorder lens, which is about 17 inches above the CRT screen and some 2 inches below the film plane. The light in passing through the lens is focused to a sharp image on the film when the shutter is in the open position.

b. The film is held flat in the film gate by a clamping device. The shutter is interposed between the lens and the film to prevent blurring of the image when the film is transported from one gate operation-aperture to the next. The lens is mounted to the film gate at one end and slipped into the viewing shroud on the other. The lens adjustments are the conventional external iris diaphragming and focusing ring. The ring markings are in standard units and f/stops. See figure 5-28.

NOTE: Fig. 5-28
Page 2710

c. Lens Assembly

1) The lens assembly is physically mounted to the bottom of the film gate. The assembly resembles the standard f/2, 2-inch focal length objective used in miniature cameras. Lenses of this type consist of several lumenized or coated-glass elements spaced and contained, according to optical formulas, within a metal tube or barrel. Within the barrel, and between the elements, is a variable aperture (iris diaphragm) with an external control ring. A method for moving the lens forward or toward the film plane (focusing) is controlled by another external ring on the barrel.

2) Since the function of the lens is to focus the rays of light emanating from the CRT, the lens opening should be large enough to obtain exposures in the desired range. The variation in this range is obtained by the iris diaphragm.

3) Lens and Mirror Elements

a) Lens elements are used in both the recorder and reproducer section of the PRR. How they function can be explained by fundamental optic laws.

b) When a light ray enters glass from the air, this speed is reduced; when it returns to the air, it resumes its original speed. If the ray enters or leaves the glass at any angle other than 90 degrees, it is bent, or "refracted," in a predictable manner, the extent of refraction being controlled by the nature of the glass and the angle at which the ray strikes the surfaces.

c) If the entering and emerging surfaces of glass are parallel, light rays passing through will continue in the original line of travel. If the entering and exiting surfaces are not parallel, as in a prism, the rays will emerge in a different direction from the original path.

d) All the rays of light reflected, or emanating, from any one point on the face of the CRT being photographed and passing through the lens will be focused as a virtual point at the film plane of the recorder. In both theory and practice this "point" is never a true point, but instead, a circle small enough to appear as a point to the eye. The film emulsion is thus exposed by varying intensities of these point sources of light.

4) Lens Barrel Assembly

a) The lens barrel assembly consists of several coated elements mounted in metal sleeve (barrel). A single element or convergent lens can be used to form an image. The image will, however, be found to suffer from defects due to lens aberriations, especially when the lens is used at large apertures. Therefore, where speed and good definition are required, several additional elements are added, each one correcting a particular fault or aberration. These elements are so mounted in the barrel that the centers of their spherical surfaces lie on the same principal axis.

5) Focal length, Focal Plane, and Focus

a) A fundamental characteristic of any lens is the focal length. The focal length is the property which determines the size of the image of an object placed at a given distance from the lens. For all practical purposes, the light from a point in an infinitely distant scene may be said to enter the lens as parallel rays. The lens bends these rays so that they converge behind the lens to form an image of the point from which they originate. The distance from this image to the rear nodal point in the lens is the focal length. The longer the focal length the larger the image of an object at a given distance.

b) As parallel rays of light from the SD CRT pass through the lens elements, they are refracted and intersect on a plane which is at right angles to the principal axis. This is known as the focal plane. The point at which the principal axis intersects the focal plane is known as the focal point of the lens.

c) When a lens is placed at a suitable distance from a luminous object (CRT display), it forms an inverted image which may be received sharply on a plane at a determined distance from the lens. This distance can never be nearer to the lens than the focal plane which represents the nearest plane on which real images can be received. Since a sharp image is required at the fixed plane (i. e., the plane of the film), it is necessary to move the lens relative to the film in order to satisfy the required relationship between image and film. . This operation is known as focusing.

6) Focusing Assembly

a) The focusing assembly is held to the lower part of the film gate by four screws which pass through holes at the corners of a square retaining plate. The focusing at the corners of a square retaining plate. The focusing ring can be rotated, but it is prevented from moving vertically by the retaining plate. The force transmitted (through friction) from the rotating ring to the sleeve is prevented by the retaining pin from rotating the sleeve. Rotation of the focusing ring, therefore, causes vertical travel of the sleeve and the camera lens. The focusing ring carries a scale of 24 engraved divisions, the retaining plate. A movement of one division alters the vertical position of the lens by approximately 0. 001 inch.

Display System

7) Iris Diaphragm, F/Numbers

a) Photographic lenses have an adjustable opening to vany the quantity of light passed. The size of the opening as compared with the focal length is indicated by a diaphragm scale, generally marked in f/numbers.

Each f/number is the focal length divided by the effective diameter of the diaphragm. The f/number 1.4, 2.8, 4, 5.6, 8, 11, 16, 22, 32, and 45 indicate successive decreases of one-half in light intensity (an aperture of f/4 gives twice as bright an image as f/5.6, f/2.8 twice as bright as f/4 and so on.

b) The variable aperture (iris diaphragm) is a mechanical device consisting of a set of curved leaves. The leaves, depending on how much they are caused to overlap, cover a circular area with a central, and nearly circular, hole left uncovered. This hole is the diaphragm aperture. The diaphragm is situated within the lens barrel between two of the lens elements so that it restricts the effective diameter of the light beam passing through the second lens. By rotating the iris ring, on the periphery of the lens barrel, the position of the leaves is varied to change the size of the hole. The change is usually made in calibrated f steps or "stops," as they are generally called. The recorder lens diaphragm ring is marked in eight stops from f/2, the largest opening, to f/22, the smallest.

8) Depth of Field, Circle of Confusion

a) Theoretically, when a lens is focused for a certain distance, objects at that distance only are sharp. Objects at all other distances are more or less out of focus, and points outside of the plane focused upon are imaged as blurred red circles which can be referred to as "circles of confusion." The farther the points are from the plane focused on, the larger the circles of confusion and the greater the out-of-focus effect. (See fig. 5-29.)

Note: Fig. 5-29
Page 2710

b) "Depth of field" of a lens refers to the range of distances on the near and far sides of the plane focused upon, within which details are imaged with acceptable sharpness when received. Other things being equal, depth of field increases with increasing object distance and with decreasing focal length; depth of field decreases with increasing relative aperture. For example, in the PRR at maximum diaphragm opening (f/2), the image on the film in the film gate is sharply defined over the area and tends to become blurred at the edges. As the lens is stepped down (increasing the f/ number), the area of sharp definition spreads out until at f/4 it covers the entire exposed area of the frame.

9) Lens Coating

a) Modern-day lenses have their various glass surfaces coated with a film of some metallic fluoride, usually magnesium. This is applied by vacuum evaporation to produce a normally hard coating that will withstand careful handling and cleaning by the proper techniques.

Coated lenses can be identified by the slight tint seen by reflected light. The lens will appear to be uncolored by transmitted light. These coated, lumenized, or bloomed lenses reduce surface reflections and thus reduce flare light and spots. This would also increase the speed of a taking lens slightly. In a projection system, when all glass surfaces are coated, the screen brightness will be increased as much as 50 per cent.

10) Care of Lenses

a) To perform satisfactorily, a lens must be properly aligned with the film in the film gate. Rough handling or the application of undue force may upset such alignment.

b) All optical-glass surfaces should be protected as much as possible from dust, dirt, and fingerprints. Lenses should also be protected from jars and jolts, and from extreme and sudden changes in temperature. They should not be stored in hot or humid places.

c) An occasional cleaning of both rear and front lens surfaces is necessary in the camera lens assembly and the individually mounted lenses in the reproducer. Care should be taken not to scratch these lens surfaces while cleaning. Any dust or grit should be removed first by gently brushing the surface with a fine-hair brush. A clean, soft, lint-free cloth, such as well-washed linen or the Selvyt Cloth, may be used when brushing is inadequate. In the case of fingerprints or scum formation, breathing on the lens is suggested or the sparing use of a recommended lens cleaner.

CAUTION

Do not use acid, alcohol, or other solvents. Avoid excessive cleaning and excessive pressure, as this may do more harm than good. Do not remove elements from a barrel or otherwise take a lens apart. The use of silicone-treated tissues for cleaning coated lenses should be avoided. The effectiveness of a lens coating is due, in part, to its critically controlled thickness (millionths of an inch). The silicone deposited by this type of tissue (sight savers, etc.) adds to the coating thickness, changes its apparent color, and impairs its anti-reflection function.

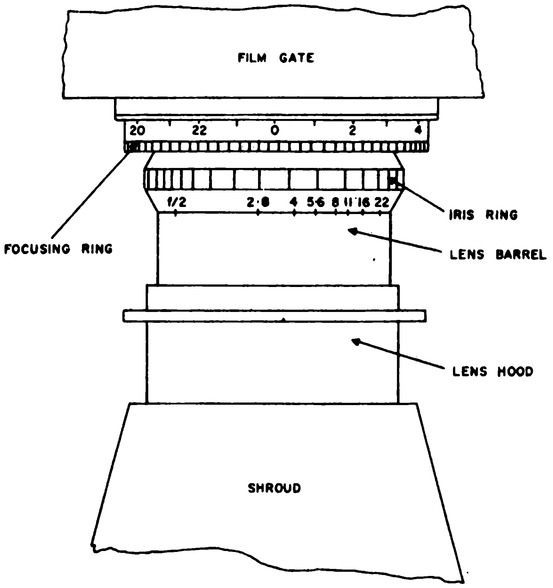

Figure 5—28. Recorder Lens Assembly

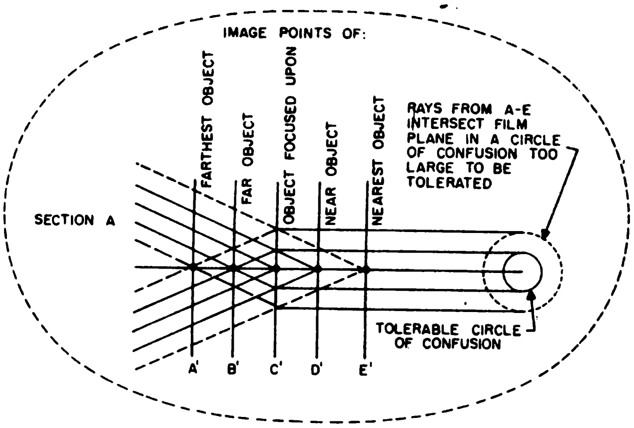

THE EFFECT OF LENS APERTURES ON DEPTH OF FIELD

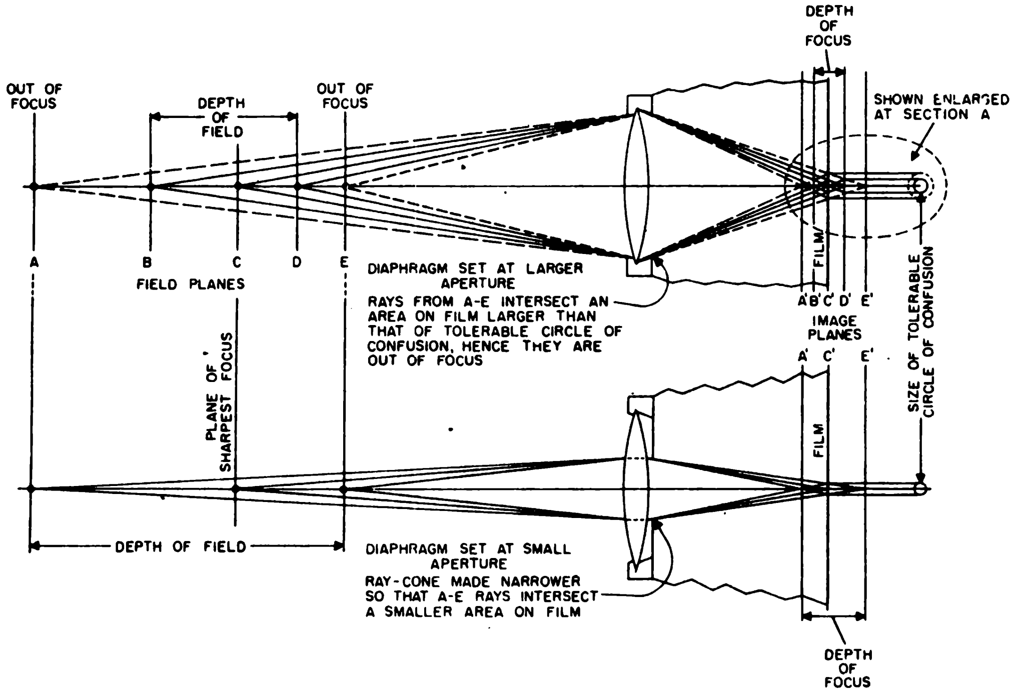

Figure 5—29. Lens Aperture, Depth of Field Effect

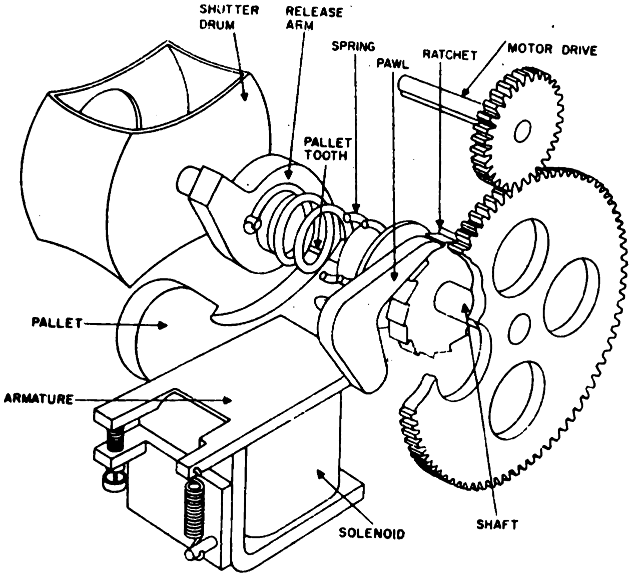

Figure 5–30. Recorder Shutter Mechanism

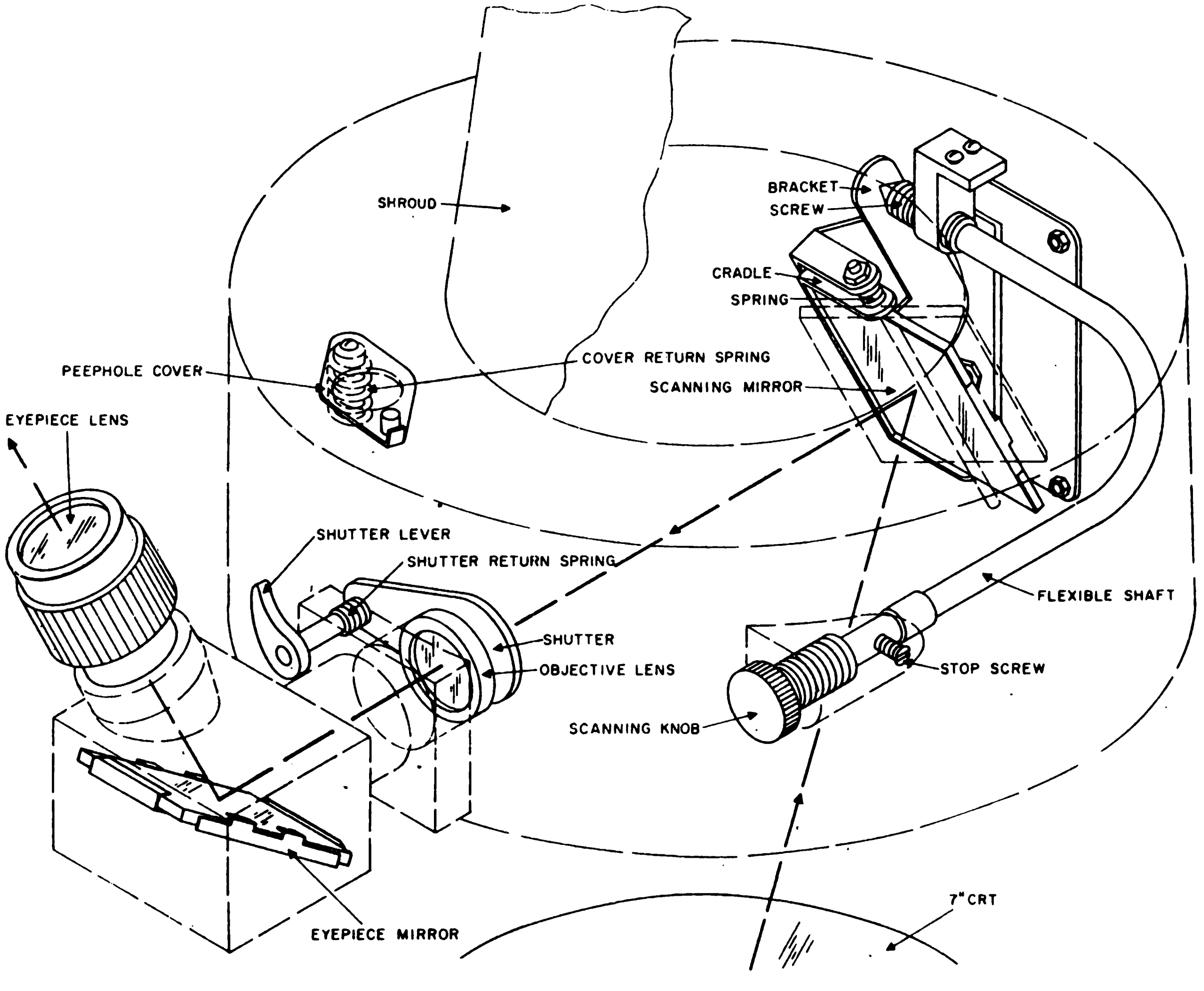

Figure 5–31. Viewing Assembly Mechanism

d. Recorder-Shutter

1) A shutter is a device designed to shut off or block the exposure of light in its path. Generally, the familiar type of camera shutter consists of several spring-loaded blades that open and close in an iris fashion, when the spring release is tripped. This type of delicate mechanism is replaced in the recorder by a comparatively trouble-free, rotating drum type of shutter.

2) The film drive unit moves the film once every 30 seconds. The SD CRT unblanking or intensification occurs within this quiescent interval for a period of 2.6 seconds for the full frame exposure. This SD cycle is the only one illuminated; the other displays (about 11) are effectively blanked during the 30 seconds that the shutter is open. Thus, it would appear that there would be no need for a shutter device.

3) Although seemingly unnecessary at the current speed of operation, the shutter would be essential at increased speeds to prevent blurring of the image when the film is transported.

4) Recorder Shutter Mechanism

a) The recorder shutter is a hollow drum with a diametrical hole. See Figure 5-30. The rays of light passing through the recorder lens have a free path to the film when the axis of the hole is vertical. The light is cut off if the drum is turned 90 degrees. Energy for the shutter operation is derived from a coil spring which is wound by a small induction motor. This shutter motor drives a shaft by means of a pinion and gear wheel. The shaft, however, cannot rotate, since the release arm is engaged by the leading tooth of the pallet and energy becomes stored in the spring. When the spring is fully wound, the motor stalls; a series resistor in the motor circuit presents overheating of the motor in the stalled condition. The shutter is closed just before the film clamps lift,

Note: Fig. 5-30
Page 2720

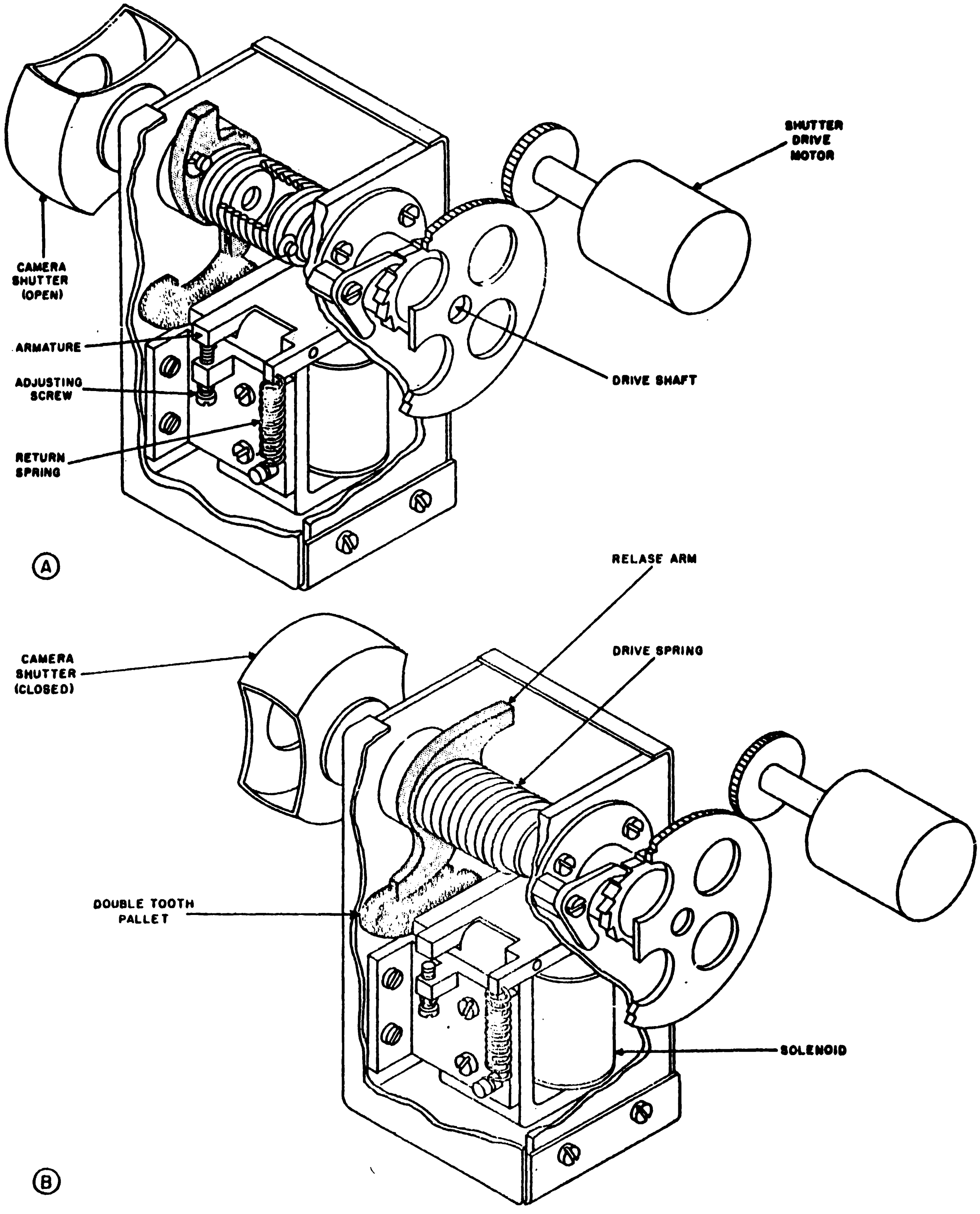

CAMERA SHUTTER MECHANISM

and it is opened just after the film is reclamped.

5) Shutter Solenoid

a) The drive spring is attached to a release arm that is held in place by the first tooth of the double pivoting pallet. The motion of the pallet is controlled by a solenoid, in this manner.

1) In the open-shutter position, the solenoid is not energized. The armature of the solenoid is controlled by its spring, and the pallet is engaged at one end. This prevents the action of the drive spring from moving the release arm.

Note: Refer to Page 2740

2) When the solenoid is energized, the end of the armature is drawn down; this has the effect of rotating the armature and pallet. The leading tooth of the pallet falls, releasing the end of the release arm. The release arm is caught by the second tooth of the pallet; this action closes the shutter having it turn 90 degrees. Each time the shutter drum rotates, the resulting decrease in tension of the drive spring is made up again by rotation of the shutter motor, which stalls again immediately after the spring is fully wound.

e. Viewing Assembly

1) The viewing assembly is essentially a light-tight shroud, extending from the recorder lens to the SD CRT. Its purpose is to prevent extraneous light from entering the recorder lens and fogging the film. It also serves as a light-tight enclosure to prohibit ambient light from washing out the image contrast on the face of the tube.

2) To enable monitoring of the CRT for proper display, the face of the CRT would

have to be observed. Therefore, provision for viewing the CRT is made by means of a peephole device and an optical assembly affixed to the shroud.

3) Shroud

a) The shroud consists of two fabricated parts, one conical and the other cylindrical, forming an integral unit. See figure 5-31. The conical portion has a movable lens hood attached to its apex by a tension screw. The lens hood slides in a felt sleeve attached to the shroud. The sleeve acts as a friction shim permitting the shroud extension (lens hood) to be moved up to and over the lens barrel, yet maintaining the upper part of the receiving assembly light-tight.

Note: Fig. 5-31
Page 2720

4) Optical Viewing Mechanism

a) The optical viewing mechanism incorporates an optical system employing a magnifying lens and a scanning mirror. By this means, an element of the CRT face may be viewed with a magnification of about six times. The use of the scanning mirror enables this element to be moved along a diameter of the tube face. Breaking down the optical system further, to its component parts as shown in figure 5-31, it will be seen that this indirect viewing method is necessary if magnified portions of the display are to be observed. Light from a small section of the tube face strikes the scanning mirror and is reflected from it to the eyepiece. After passing through the objective lens, it is further reflected at the eyepiece mirror and passes through the eyepiece lens to the eye of the observer.

b) The scanning mirror consists of a section of aluminized plate glass which can be turned at an inclined axis to the vertical. The mirror is turned by a flexible shaft affixed to the mirror mount on one end and protruding through the shroud, with a control knob affixed to the other end. Rotation of the scanning knob determines the position of the mirror and thus that portion of the viewed display desired.

c) The objective lens (fig. 5-31) causes an image of the viewed elements of the CRT face to be formed at the focal plane of the eyepiece lens. It consists of two cemented elements of differing types of glass. The purpose of this combination is to apply color correction to the eyepiece assembly and so prevent the appearance of multi-colored blurring at the edges of the image seen by the observer. Such blurring occurs when the amount of refraction or bending of a ray of light upon entering or leaving a polished glass surface varies with the color of the light. Every property of a lens depends on color. Thus, the position of the image itself changes slightly with the color or wavelength, of light; this effect is known as axial, or longitudinal, chromatic aberration. This deficiency can be reduced by using the proper combination of two or more different kinds of glass.

d) The eyepiece assembly (fig. 5-31) is positioned so that the observer can view the display on the CRT without interference. The housing for the various components of the eyepiece assembly consists of a mirror box which extends into a short tube attached to the cylindrical part of the shroud. The end of the tube adjacent to the mirror box contains the objective lens. The inner end of the mounting tube is normally closed by a spring-loaded cover operated by a trigger control accessible to the observer. The purpose of this cover is to prevent extraneous light from passing through the eye-piece system and being reflected by the scanning mirror on to the tube face.

e) The eyepiece mirror (fig. 5-31) is a section of surface-aluminized plate glass on a brass mount. Two mounting screws make possible final assembly adjustments. The mirror box has a removable cover plate giving access to the mirror.

f) The eyepiece lens has a screw-mount attachment at the top of the mirror box. The focal length of this lens can be altered slightly by rotation of the milled ring encircling the lens mount. For an

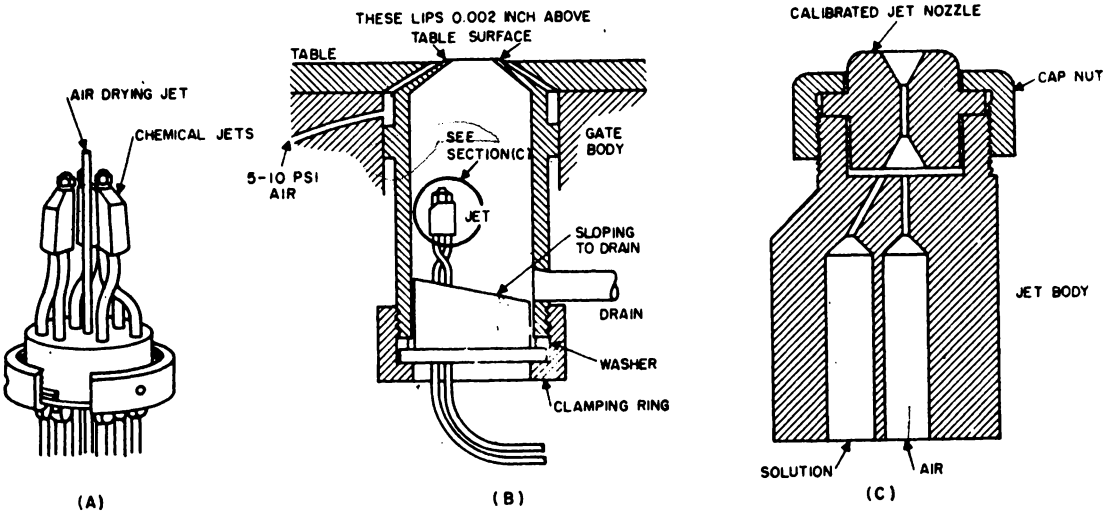

Figure 5–32. Processing Aperture, Functional Diagram

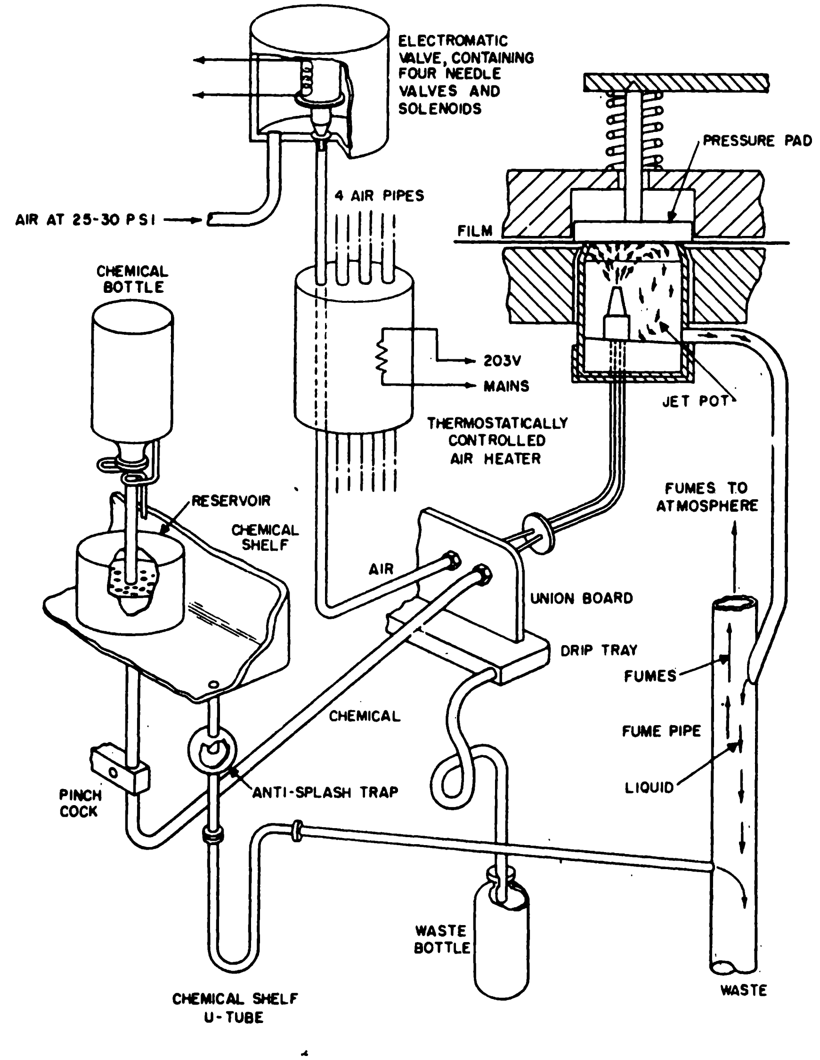

Figure 5–33. Chemical System

observer with normal eyesight, the focus is arranged so that the image formed by the objective lens lies exactly in the focal plane of the eyepiece lens; the observer then sees a sharp, magnified version of this image.

4. Processor

a. The film frame now having been exposed in the recorder aperture of the film gate, it is pulled to the next aperture for rapid processing. It is this rapid chemical processing that makes possible a new display every 30 seconds on the large projection screen. The exposed area of film over the processing aperture is sprayed with the proper chemicals by means of air jets, in timed sequence. The film remains in the same position for the full processing time, from the initial developer spray to the final drying of the film. This can be done because the aperture is the top of the processing pot which contains the jet-spray nozzles (jet unit). See figure 5-32, B.

Note: Fig. 5-32
Page 2780

b. The jet unit contains three jets (fig. 5-32, A) for applying the develop, fix, and wash solutions to the film in the form of a fine spray; a fourth jet directs warm dry air on to the processed film, substantially drying it. The various jets are operated by compressed air, which is controlled and heated electrically. The jets are supported on their supply tubes in a central cluster within the processing pot. The air drying tube passes axially through the bottom plug of the pot, and the three chemical jets are equally spaced around it. The chemical jets converge slightly so that each is directed toward the center of the processing aperture. See figure 5-32, A.

c. Chemical Supply

1) The chemicals for developing and fixing the film are prepared in 50-oz. glass bottles for use in the PRR. The developer solution is contained in an amber bottle, to prevent deterioration, while the fixer and wash solutions are contained in clear glass bottles. For ease of identification, the fixer solution contains a blue dye and the wash solution, a pink dye.

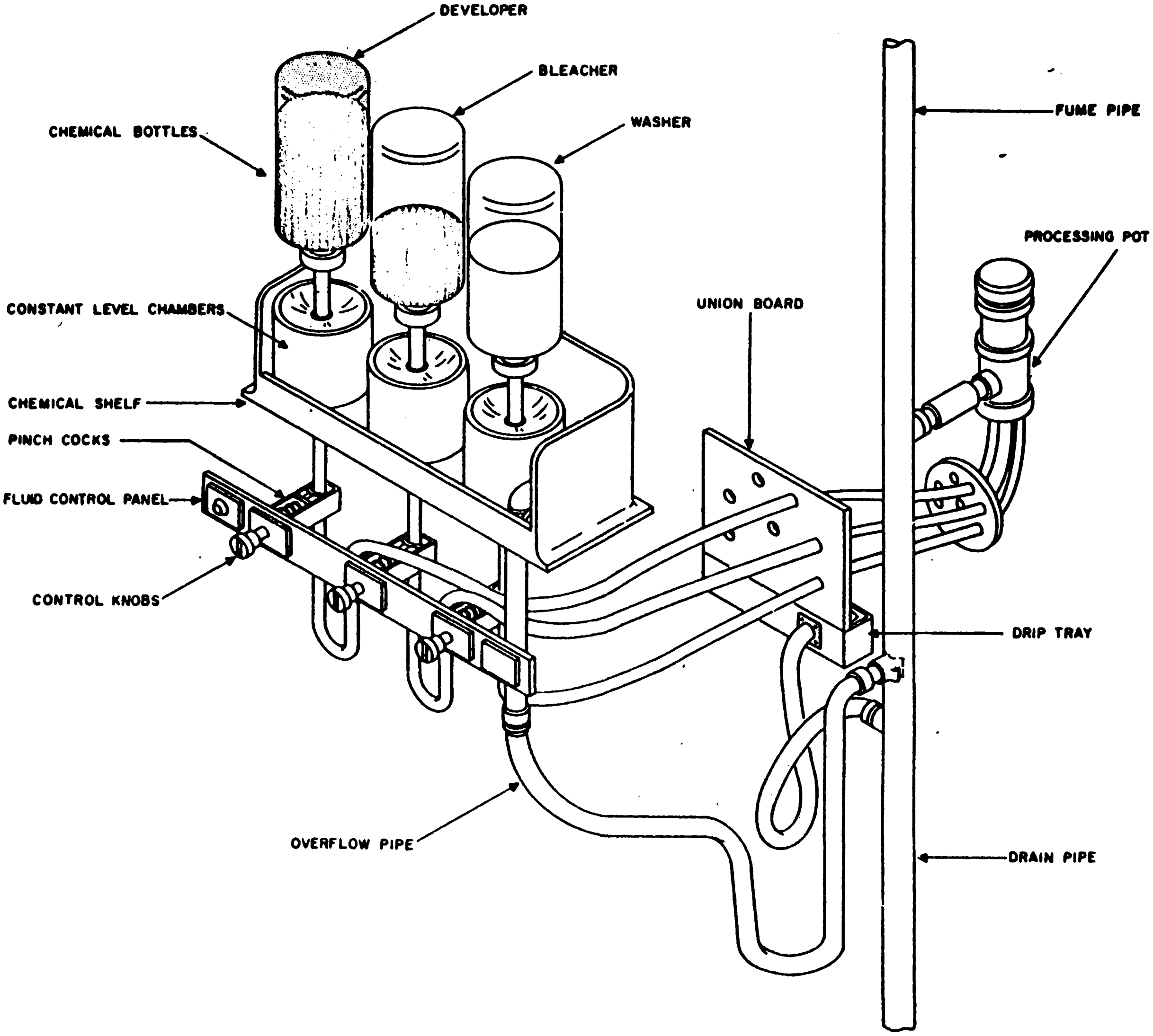

CHEMICAL FLOW DIAGRAM

2) Each solution is fed through a manually controlled on-off valve, (pinch cock) to the processing pot, where they are mixed with heated, pressured air and jet-sprayed against the film emulsion. The air pressure determines the quantity of chemical solution admitted to the processor. The pressure of the air supply (from an external air compressor) is regulated manually at the PRR unit.

Refer to Page 2830

3) When in their correct positions in the PRR console, the three chemical bottles are inverted over constant-level chambers. (See fig. 5-33) Liquids flow out of the bottles until the levels in the chambers just reach the ends of the bottle nozzles. Atmospheric pressure on the surface of the liquids in the chambers prevents accidental gravity flow.

<u>Note:</u>
<u>Fig.</u>
Page 2800

Each level chamber has an outlet at the bottom and an overflow outlet near the top. Overflowing liquid passes through a drain pipe into a tray formed by the chemical shelf on which the level chambers stand. These chambers contain contact probes which become uncovered when the liquid falls 1/4 inch below normal. These probes are associated with the chemical-flow warning circuit.

<u>Note:</u>
Fig. 5-33
Page 2780

d. Air Supplies

1) Each PRR unit requires two separate air supplies:

a) A high-pressure air supply with a flow corresponding to 4 cubic feet of free air per minute.

b) A large volume of low-pressure air (normally derived from the site equipment cooling air supply) to provide cooling of the electronic equipment and the projection lamp.

2) High-Pressure Air Supply

a) The high-pressure air is normally delivered from a compressor in the site installation at between 40 and 80

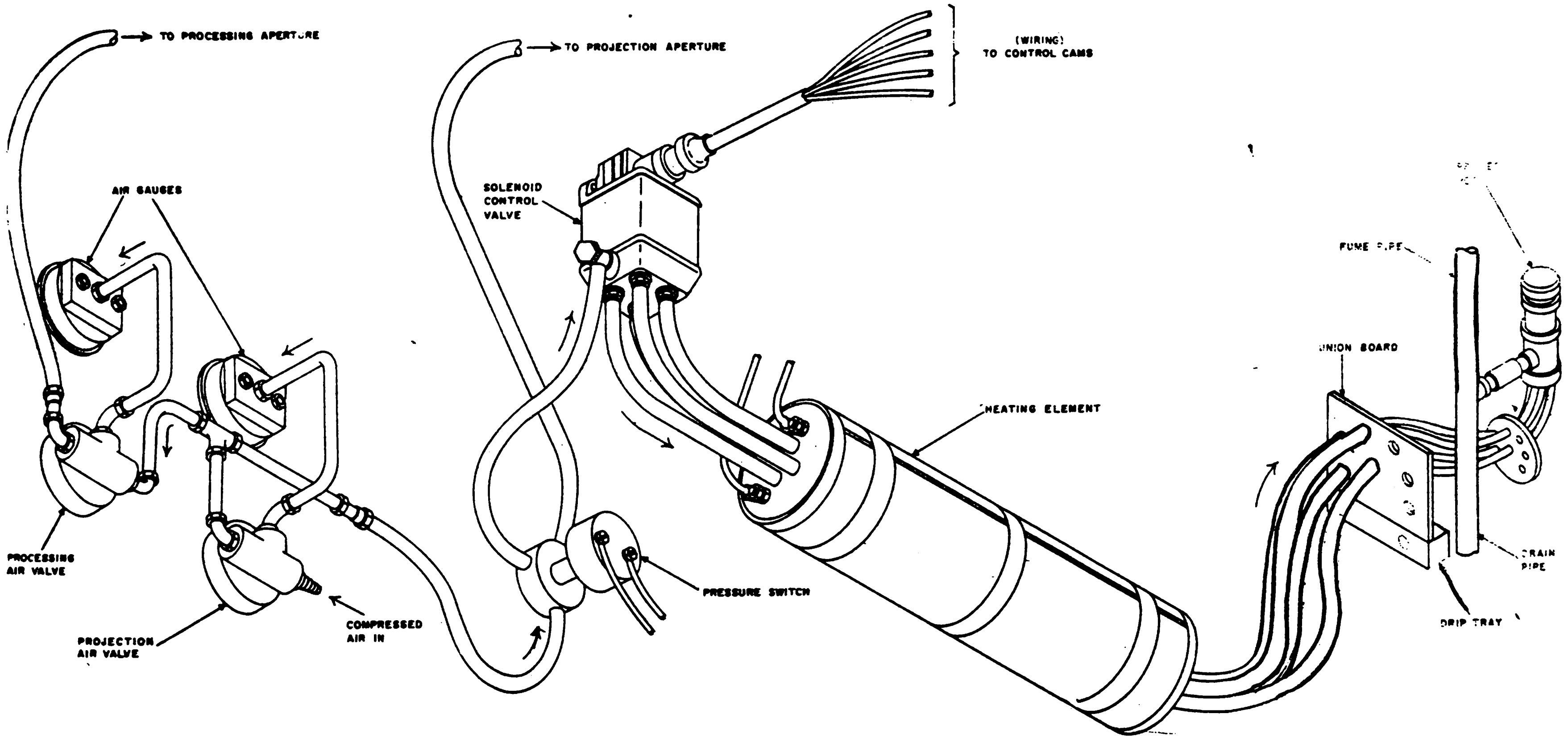

AIR SUPPLY SYSTEM

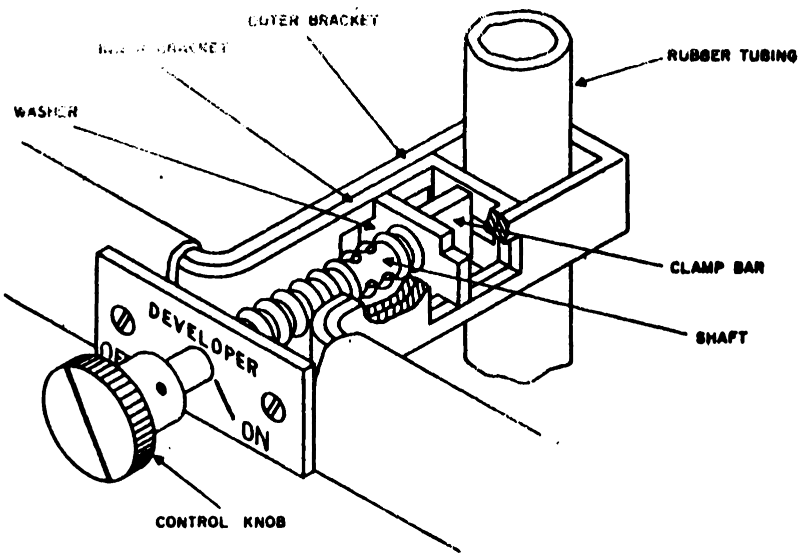
OUTER BRACKET
INNER BRACKET
WASHER
RUBBER TUBING
CLAMP BAR
SHAFT
DEVELOPER
OFF
ON
CONTROL KNOB

PINCH COCK

psi. This air is fed to the manual PROJECTION AIR shutoff valve on the main control panel. The pressure is regulated to 30 psi for use at the reproducer aperture. From the PROJECTION AIR valve, air is directed through the PROCESSING AIR valve, where it is further reduced to 10-psi gauge pressure for use at the recorder aperture. The air at 30 psi also passes through a pressure switch to the solenoid air-control valve that distributes the air among four output pipes for processing in a timed sequential cycle determined by the control cams. The pressure switch is part of the interlock circuit. (See fig. 5-34.)

Refer to Page 2820

Note: Fig 5-34 Page 2850

b) The solenoid air control valve (fig. 5-33) is actually four solenoid actuator plunger-type valves. Three of the valves are normally closed; the fourth, normally open. Compressed air at cycled intervals from the solenoid control valve passes through an electric element that heats the air. This heater air passes through the union board and into the processing pot. Figure 5-34 is a diagram of the compressed air system.

c) Overflow liquids escape through a drain in one corner of the chemical shelf and pass through a glass splash trap to the fume pipe, which carries waste liquids to the waste tank. The waste tank is hermetically sealed and is emptied by the admission of compressed air. The waste outlet pipe extends nearly to the bottom of the tank. When compressed air is admitted at the top, it displaces the liquid in the tank and forces it up a plastic waste pipe to a suitable drain. See figure 5-33 and 5-34.

3) Low-Pressure Air Supply

a) Air for cooling the electronic chassis and projector lamphouse is derived from the site equipment cooling air supply and is connected to an inlet pipe at the top of the PRR unit.

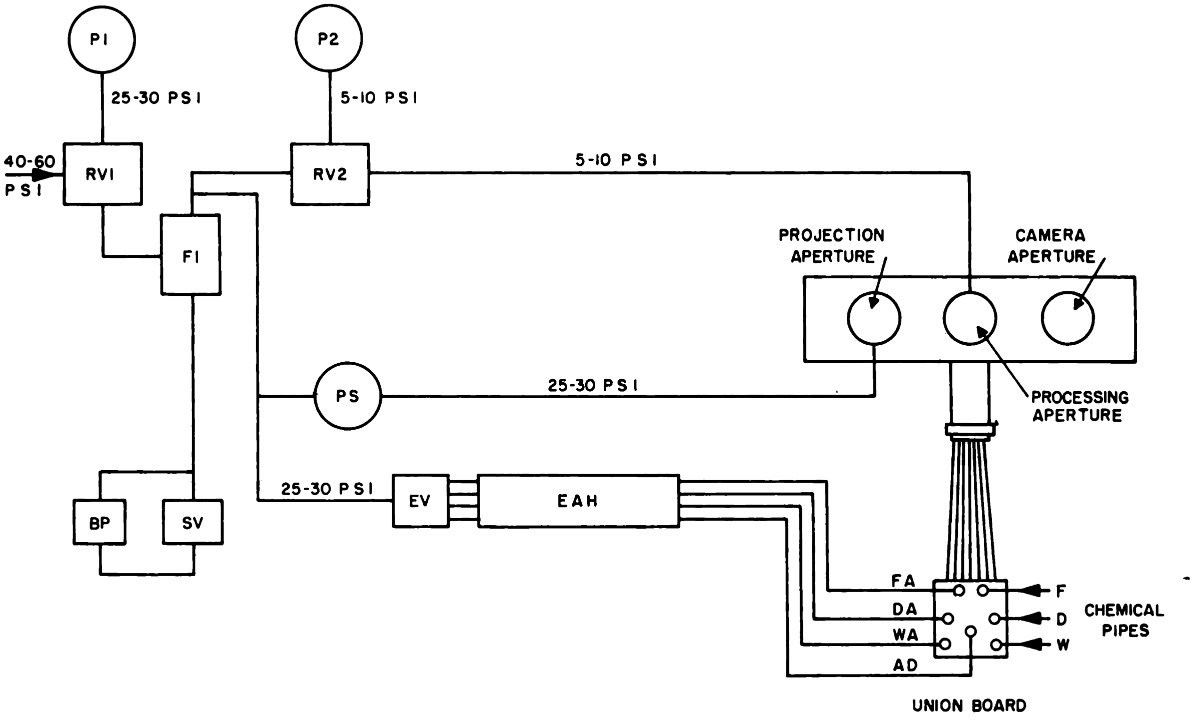

P1, P2, P3	PRESSURE GAUGES
RV1, RV2	REDUCING VALVES
F1	FILTER
BP	BY-PASS
SV	SAUNDERS VALVE
PS	PRESSURE SWITCH
SV	SOLENOID AIR CONTROL
EAH	ELECTRICAL AIR HEATER

Figure 5—34. Compressed Air System Diagram

b) The air passes into compartments, panels, and vertical cavities inside the housing. Baffle plates, in the floor compartment, deflect the air into two streams. One of these passes up through the electronic units and then combines with the other stream to pass via ducting into the lamphouse. Exhaust air from the lamphouse returns to the site cooling air system via a short length of 6-inch pipe, fixed to the PRR unit roof. The pipe contains an automatic damper and above it an air flow indicator. See Figure 5-35.

<u>Note</u>: Fig. 5-35
Page 2870

c) The damper consists of a metal disc which is pivoted in the tube on a diametrical spindle. The controlling element is a spiral spring, formed of a bimetallic strip. When the air emerging from the lamphouse is cold, this spring loads the damper against a stop, closing the pipe and restricting the air flow. This enables the projector lamp to reach its operating temperature as quickly as possible after the equipment is switched on.

d) As the lamp warms up, the air temperature in the outlet pipe rises. This causes the bimetallic spring to unwind, opening the damper and allowing an increase in the flow of cooling air.

e) The air-flow indicator consists of a 3-cup anemometer rotor mounted on the inner end of a radial shaft in a short pipe section interposed, between the outlet pipe from the unit and the return. The outer end of the radial shaft is mounted on a ball bearing and carries an indicator dial. The dial is marked in red and white quadrants and is visible through a window in the surface of the pipe section. The rotor speed depends on the rate of air flow through the pipe. The indicator dial permits the operator to ascertain speed of air flow.

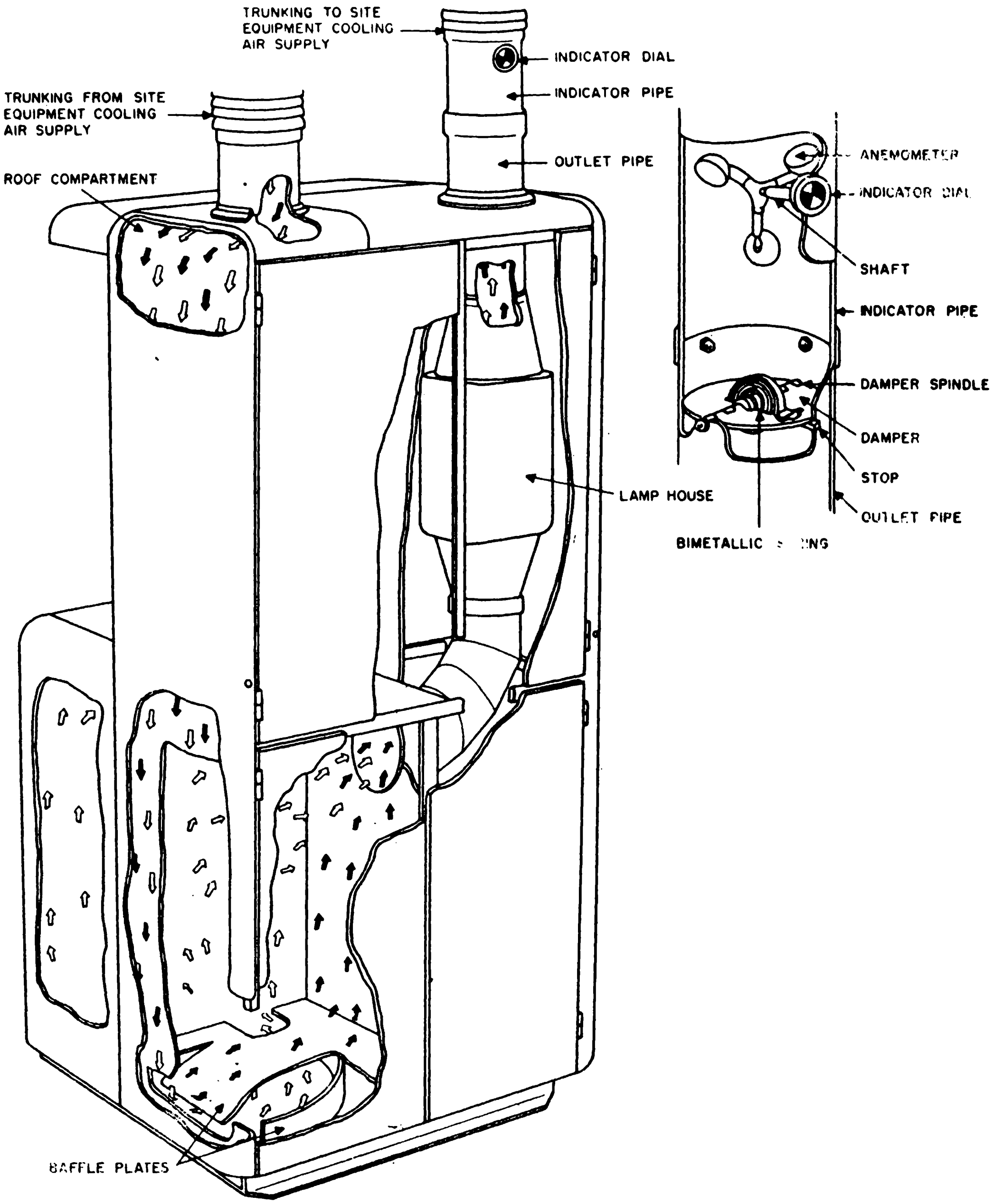

Figure 5–35. Low-Pressure Cooling System

2) The upper end of the pot is slightly less external diameter than the aperture in the lower part of the gate. Air at 10 psi is admitted to the annular space so formed. This is done for two reasons:

   (a) To prevent processing liquids from seeping out between the upper edge of the pot and the film, which would give a ragged edge to the processing area.

   (b) To ensure that the film is lifted from the edge of the pot at the instant the pad rises in order to prevent the slightly swollen emulsion from being torn off the film during transport.

f) Chemical Jets

1) A simple cross-sectional diagram illustrating the principles of the jet is shown in figure 5-32, C. Compressed air enters the chamber via the compressed air inlet. In the chamber, the air loses pressure energy, causing a partial vacuum around the sides of the chamber. Consequently, liquid is drawn in from the chemical orifice, and it combines with the air to form a fine high-velocity spray.

<u>Note</u>: Fig. 5-32
Page 2780

2) A very small alteration in the bore of the nozzle has a significant effect on delivery. It has been determined that increasing the bore of either the liquid nozzle or the air nozzle increases the flow of liquid through the jet, and also increases the size of the droplets of liquid in the spray.

CAUTION

The three nozzles are not interchangeable. The chemicals differ in specific gravity and the nozzles have been bored for a particular rate of flow for each chemical.

g) Air Drying Jet

1) The air drying jet (fig. 5-32, A) consists of a simple nozzle driven into the end of the air drying tube. The bore of the nozzle determines the rate of flow of drying air.

5. Reproducer

a. Upon completion of the processing cycle, the film is automatically transported to the reproducer aperture of the film gate for projection to the Command Post screen. A high-intensity mercury vapor arc lamp is used for image projection. Light from the lamp is reflected by a parabolic reflector to a group of four condenser lenses. These condensers concentrate the light and, with the aid of a lens behind the condensers, either disperse the beam or condense it further, as needed.

b. The adjusted light beam then passes through a manually operated sliding-shutter device to a mirror which redirects the light 90 degrees upward. The shutter is used to block the projector light path when there is need to have the lamp on and light projection is unwanted. Reflected light from the mirror passes through two additional condenser lenses, an aperture in the film gate, and through the film and projection lens to the screen. Illumination for the reproducer elements is provided by a 1,000-watt mercury vapor lamp. A reproducer switchover circuit is used to prevent two reproducers from projecting images on the Command Post screen simultaneously and also to prevent the projected light from one washing out the image of the other.

c. Mercury Vapor Lamp

1) High-intensity illumination necessary for projection of an image to the large screen is provided by a mercury vapor lamp. The lamp consists of a glass envelope containing xenon gas and a droplet of mercury. Brass ferrules, one on each end of the envelope, are connected internally.

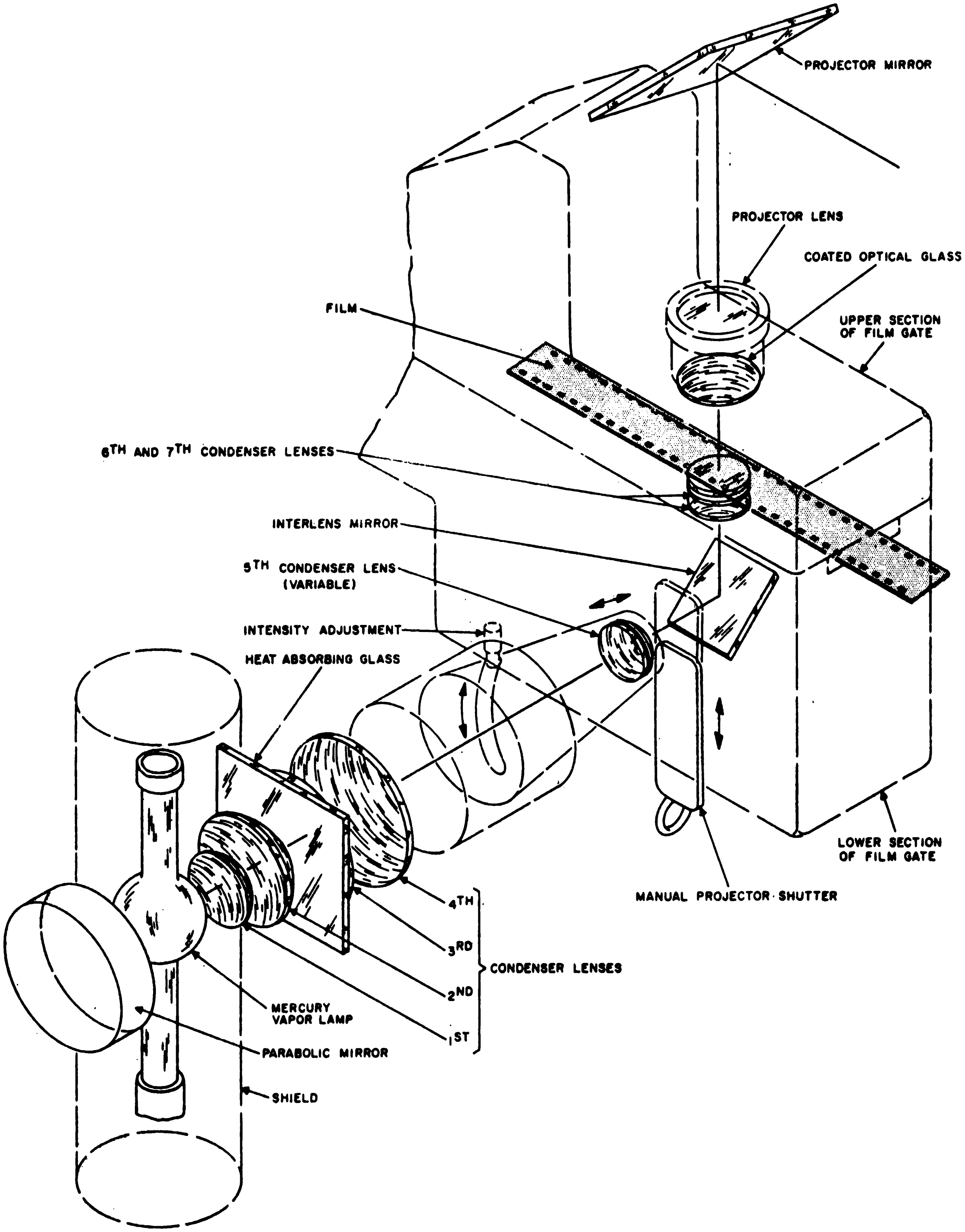

Figure 5–36. Projection Optical System

to carbon electrodes within the lamp. The electrodes are so spaced that an arc can be formed between them. High voltage must be applied across the lamp electrodes to start the arc, which in turn vaporizes the mercury. After the arc has once been initiated, it can be maintained with a much lower voltage. The lamp is enclosed in a housing, and provision is made for regulating the temperature of the air surrounding the envelope.

d. Reproducer Optical System

1) The reproducer optical system is employed to direct all available light from the projector lamp to the screen image. It does this by means of mirror, condensers, and lens elements, to gather the light into a narrow beam and control its intensity.

2) Figure 5-36 shows the relative placement of the parts of the optical system. The cylindrical shield within the lamp housing encloses the mercury vapor lamp. Two holes diametrically opposite permit reflected and directed light to pass through the shield. Light from the projector lamp passes through the rear hole and is reflected by the mirror toward the front hole. The light passes through the forward hole directly to the first four condenser lenses. When the light leaves these lenses, it has been concentrated to a narrow beam. The beam is sent down a conical sleeve, extending from the lamp housing to the fifth condenser lens. This fifth lens, a focusing lens, is mounted at the end of a tube which slides in and out of the sleeve. The movement of the lens spreads or narrows the light beam to the film and thereby changes the intensity of the light. An adjusting pin moving along a helical slot in the tube varies the lens.

<u>Note</u>:
Fig. 5-36
Page 2900

3) The light leaving the fifth condenser lens is directed toward 90 degrees by an inter-lens mirror. The light, now traveling in a vertical direction, passes through the sixth and seventh condenser lenses and through the film.

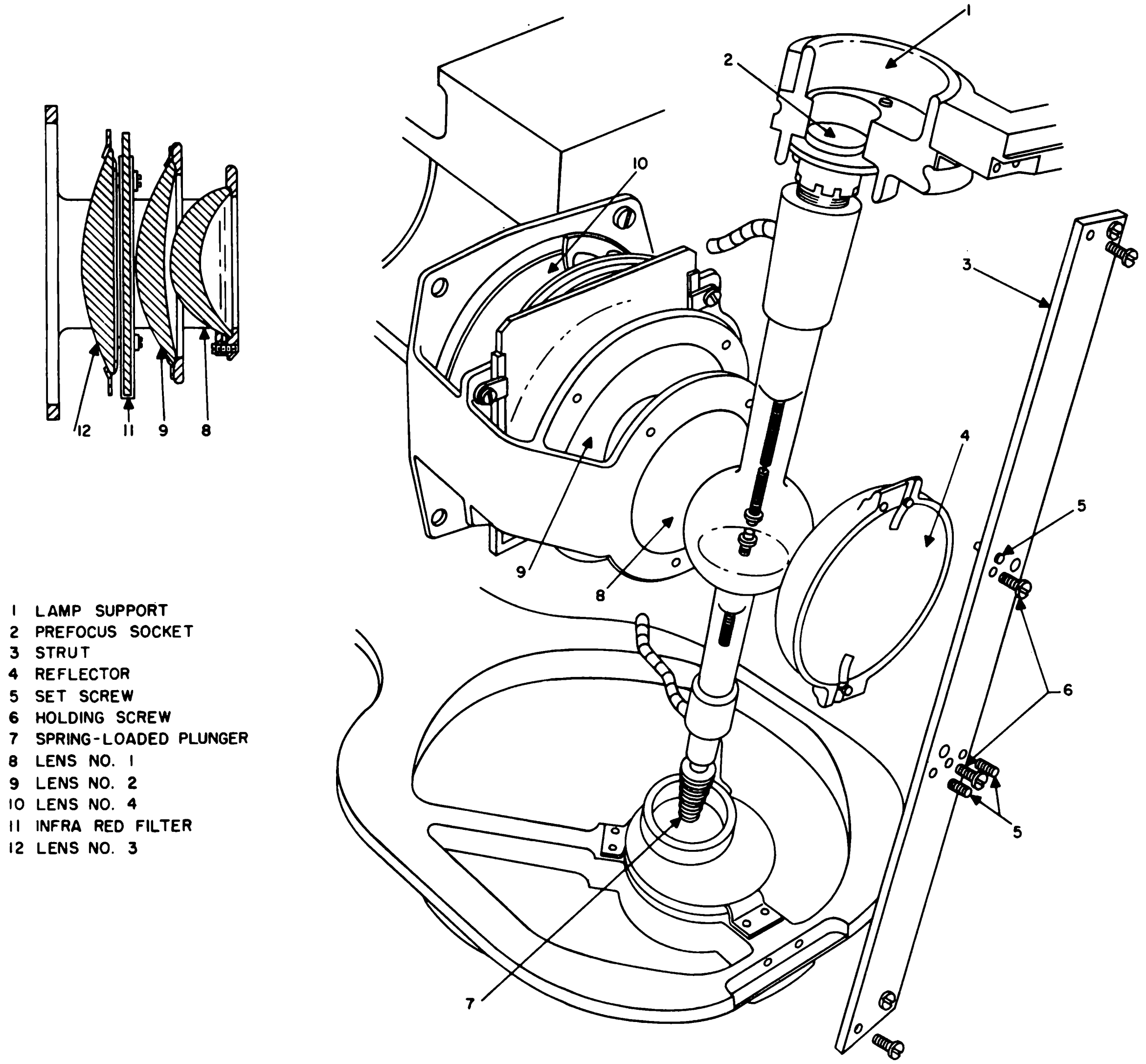

1 LAMP SUPPORT
2 PREFOCUS SOCKET
3 STRUT
4 REFLECTOR
5 SET SCREW
6 HOLDING SCREW
7 SPRING-LOADED PLUNGER
8 LENS NO. 1
9 LENS NO. 2
10 LENS NO. 4
11 INFRA RED FILTER
12 LENS NO. 3

Figure 5—37. Projection Lamp and Lenses

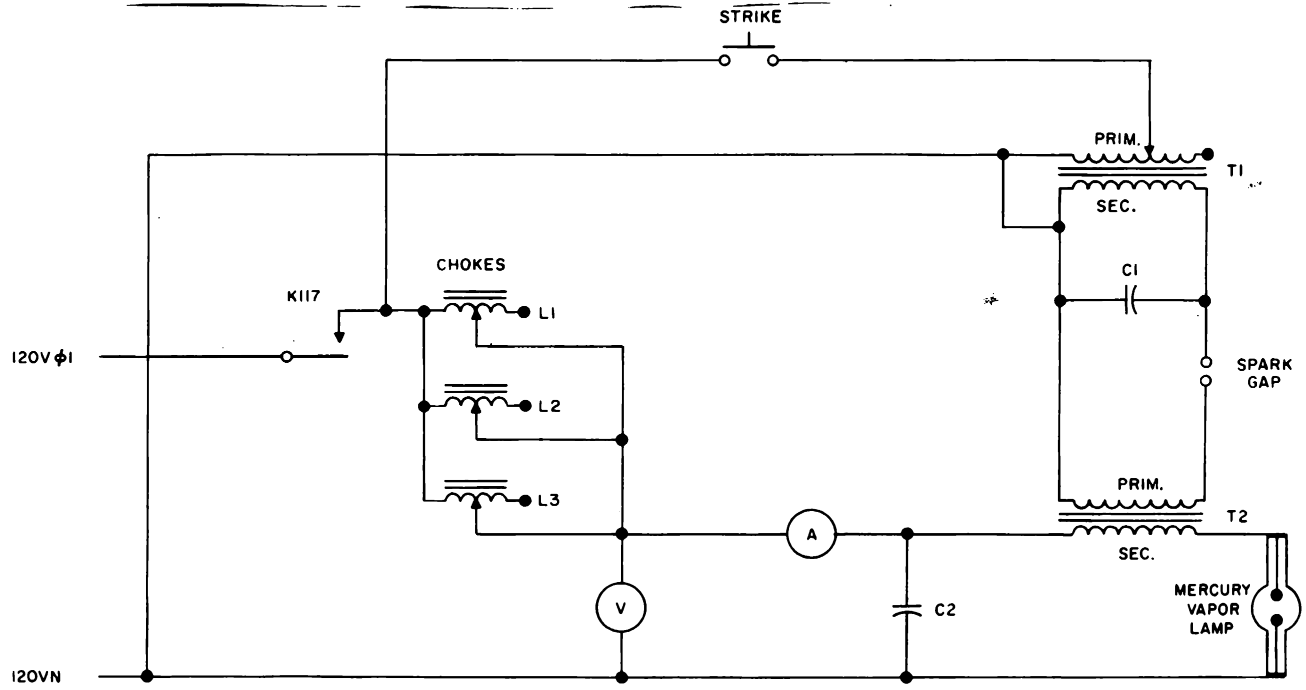

Figure 5—39. Projection Lamp Strike Circuit, Simplified Schematic

4) Projection Lens

a) The light leaving the film passes through a projection lens having a focal length that will project the film image 35 feet to the 14-by-14 foot screen. The projection (reproducer) lens closely resembles the recorder lens both in appearance and construction. The several lens elements are mounted in a specially designed anti-reflection barrel and are fully corrected to obtain a high definition and flatness of field. As in the recorder lens, focusing is achieved by varying the distance of the lens to the film plane. (See Fig. 5-36 and 5-37).

Note:
Fig. 5-37
Page 2920

5) Reproducer Mirror

a) The reproducer mirror is a rectangular section of surface-aluminized plate glass that reflects the light from the projection lens to the screen. The interlens mirror reflected the light, from the mercury vapor lamp, 90 degrees to a vertical beam. The reproducer mirror reflects the light back again to a horizontal beam. (See fig. 5-36).

b) The reproducer mirror is mounted in a cast metal frame just above the projection lens. Three screws entering the rear of the frame bear against the back of the mirror opposite the springs. The mirror can therefore be adjusted both horizontally and vertically by individually rotating the spring-loaded screws. By loosening the frame central mounting bolt, the entire frame can be rotated considerably in the vertical direction.

e. Manual Shutter and Switchover

1) Two operational PRR units are provided for each site to enable the standby warmup, for minimum downtime, during changeover. The manual shutter and switchover circuit is provided to prevent the possibility of both units projecting to the screen at the same

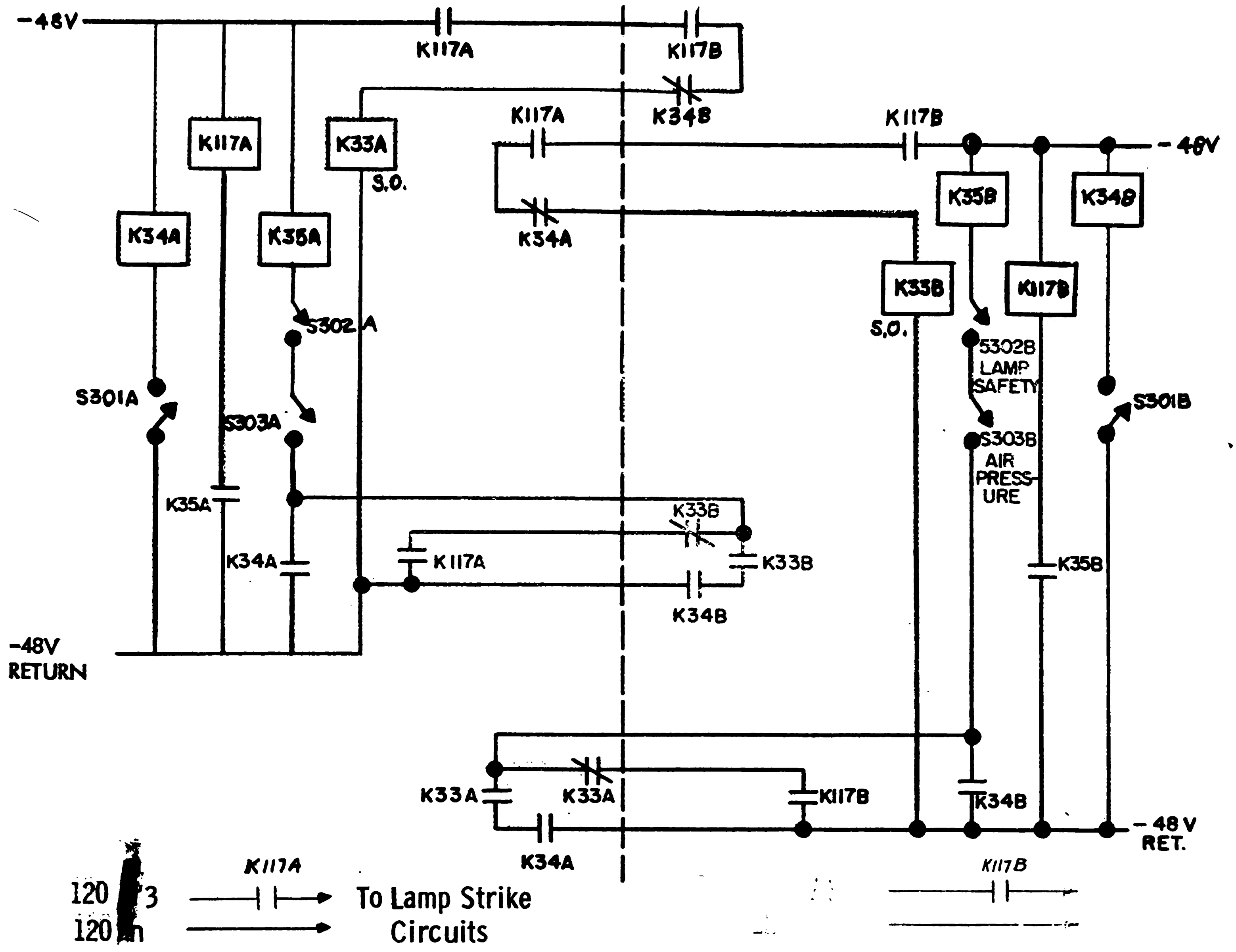
-48V
K117A
K117B
K34B
K117A
K33A
S.O.
K117A
K117B
-48V
K34A
K35A
K34A
K35B
K34B
K33B
K117B
S.O.
S302 A
S301A
S303A
S302B
LAMP
SAFETY
S301B
S303B
AIR
PRESSURE
K35A
K33B
K34A
K117A
K33B
K35B
K34B
-48V
RETURN
K33A
K33A
K117B
K34B
K34A
-48 V
RET.
K117A
120
3
120
n
To Lamp Strike
Circuits
K117B

2940

time. To have either unit in standby operation, with the projector lamp alight but not projecting, a manually controlled sliding shutter is interposed between the fifth condenser lens and the interlens mirror of the optical system.

2) When a shutter is pushed to the up position, light from the lamp is barred from the film. This action also closes a set of contacts in a microswitch mounted adjacent to the shutter. These contacts control the switchover circuit. To understand the operation of the switchover circuit (see fig. 5-38), assume that reproducers A and B are on, both shutters are down, and S301A and S301B are open. (Because the PRR units are identical and have the same symbol designations, the letters A and B are arbitrarily assigned to avoid confusion in analyzing the switchover circuit.)

Note. Fig.
Page 2940

3) Before striking the lamp in either projector, ensure that the lamphouse safety cover is in place (closes S302) and that projection air is turned on (closes S303). In order to strike the lamps, K117 must be picked and remain energized. To pick K117A, close the shutter (S301A) in projector A. This will cause K34A to pick K35A which will energize K117A. The lamp in projector A can now be struck but projection is not possible until the shutter is dropped. When the shutter is dropped, K34A drops but K35A remains energized through the N/C points of K33B and the N/O points of K117A. Hence K117A remains picked and projector A continues to display.

X S302
X S303

X S301A
X K34A
X K35A
X K117A

S301A
K34A

4) To strike the lamp in projector B, close the shutter (S301B) in projector B. This allows K34B to energize K35B, which will pick K117B. K33B (Interlocking Relay) picks when K117B is energized and keeps K35A energized through the N/O contacts of K33B and K34B, which are now closed. (N/O contacts of K33 make before N/C contacts open.) Projector B's lamp can now be lit.

X S301B
X K34B
X K35B
X K117B
X K33B

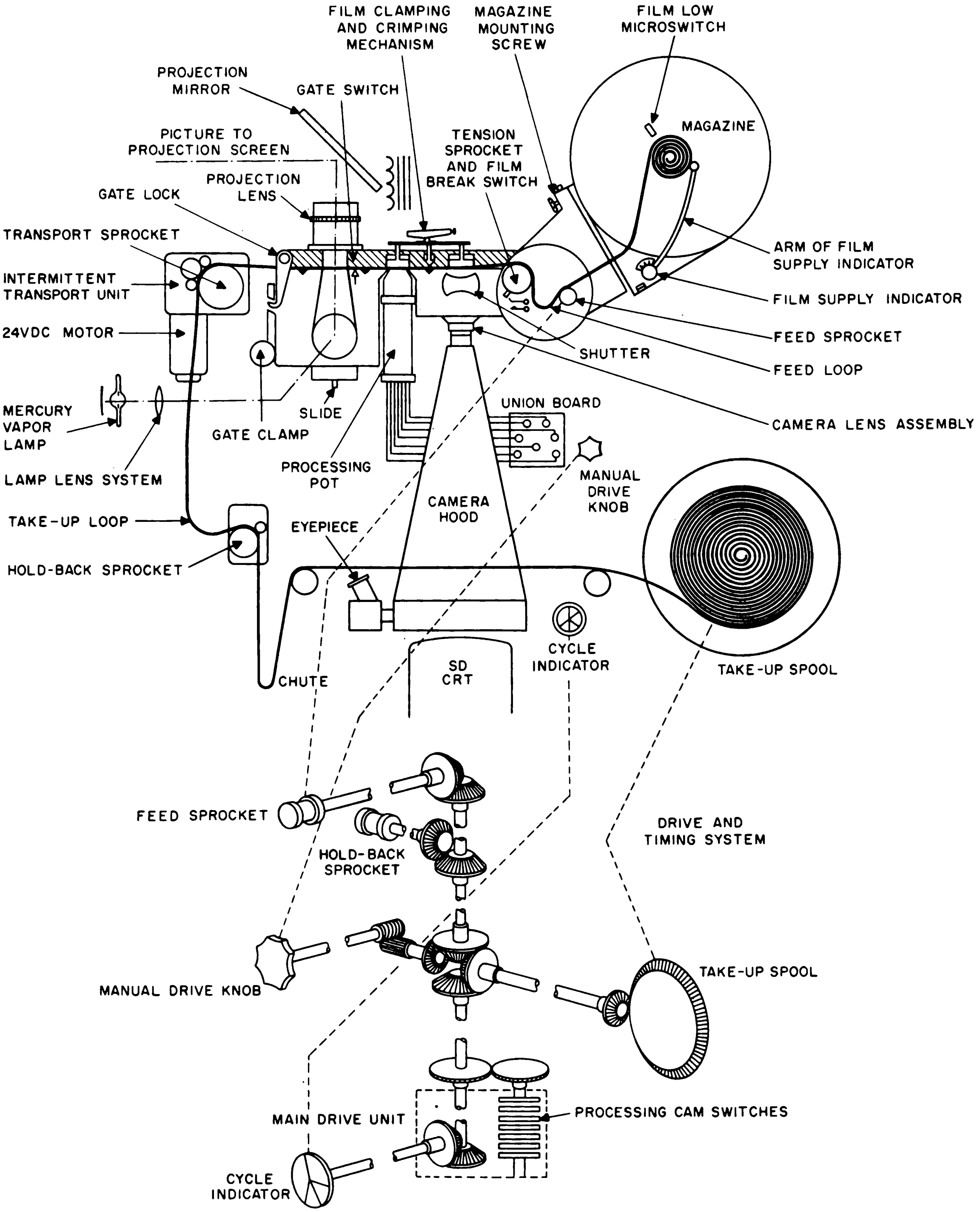

Figure 5—40. Functional Flow Diagram of PRR

Assume now that Projector A is projecting and Projector B is lit with its shutter in the up position. In order to switchover to projector B, all that is needed is to pull S301B down. The result is to drop K34B which opens the hold path for K35A. K35A drops out causing K117A to drop and extinguish projector A. K33A (slow operating) does not have enough time to pick and hence K35B remains energized with the result that projector B is still lit and displaying.

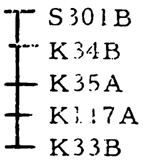

5) The mercury vapor lamp striking circuits (fig. 5-39) operates in the following manner. As K117A closes, 12Vac is applied across the lamp via the three paralleled chokes the ammeter, and the secondary of T2. This voltage will keep the lamp running, but it is not high enough for starting purposes. To provide the high voltage RF necessary for starting, a stepup transformer, capacitor, and spark gap are employed. When the strike button is depressed, 120Vac is fed across the primary of T1. The resultant high voltage across the secondary charges capacitor C1 until enough voltage builds up to jump the spark gap. When this happens, the spark gap (which now offers zero impedance), the capacitor and the primary of T2 form an LC network, producing a high-voltage RF This high voltage is induced. across the secondary of T2 and thus across RF bypass capacitor C2 and the lamp. As the high voltage jumps the gap in the lamp, it vaporizes the pool of mercury. The vaporized mercury offers a low-impedance path across the lamp electrodes, and the 120Vac is now sufficient to keep the lamp running. Three adjustable chokes inserted in the 120Vac line limit start current to 28 amperes and running current to a maximum of 19 amperes. This difference in current reading determines the length of time the start button is depressed.

Note: Fig. 5-39 Page 2920

6. Supporting Components

a. Component parts of the PRR, such as the film

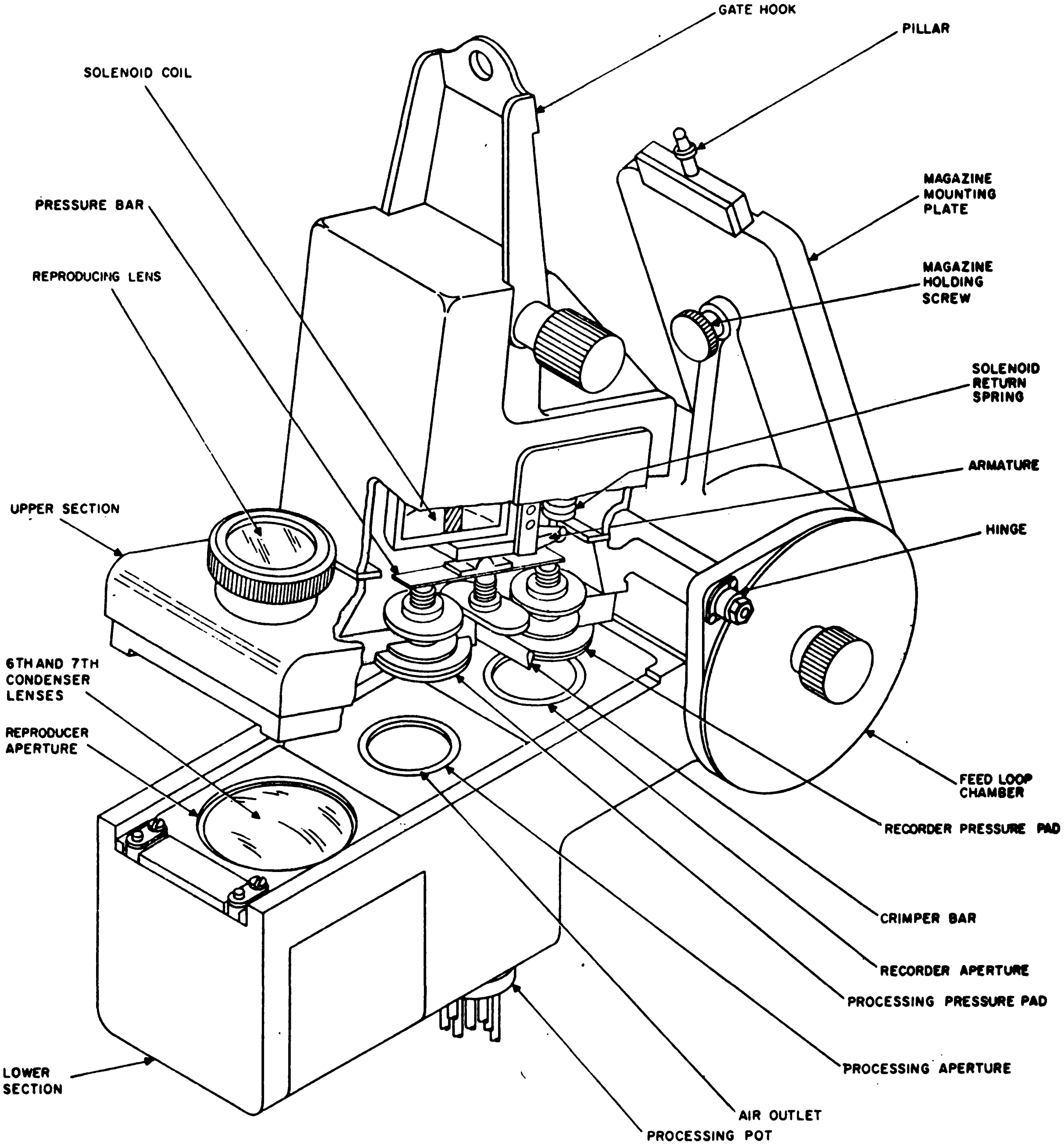

Figure 5–41. Film Gate Mechanism

gate, magazine, reels, sprockets, and clamps etc., are common to the three major assemblies that have been previously described. The functional diagram (fig. 5-40) and the block schematic (fig. 5-25) label, and show the employment of, the components that follow the recorder, processor, and reproducer groups.

Note: Fig. 5-40
Page 2960
Note: Fig. 5-25
Page 2630

b. Film Gate

1) The film gate consists of two main castings hinged together at one end; these are known as the gate and gate cover. The upper surface of the gate (fig. 5-41) and the lower surface of the gate cover are faced with a special plastic which withstands the action of the processing chemicals, while its black finish prevents light reflection. The film passes between these surfaces in a clearance space provided by a shallow depression in the upper surface. A switch consisting of a contact in the upper section and a similar contact in the lower section opens when the gate cover is raised and breaks the processing interlock circuit.

Note: Fig. 5-41
Page 2980

2) At the right end of the gate is a light-tight chamber which contains the film's feed and tension sprockets as well as the mounting for the film magazine. The front of the chamber is closed by a light-tight lid which is secured by a central bolt.

3) The gate casting contains the three circular apertures, arranged with their axes on the center line of the film track. They are:

a) The recorder (camera) aperture, which allows the film to be exposed to the image of the SD CRT display formed by the recorder lens.

b) The processing aperture, which contains the processing pot and jet unit.

c) The projection aperture, which allows the beam of light from the lamp housing to pass through the film and then through the projection lens.

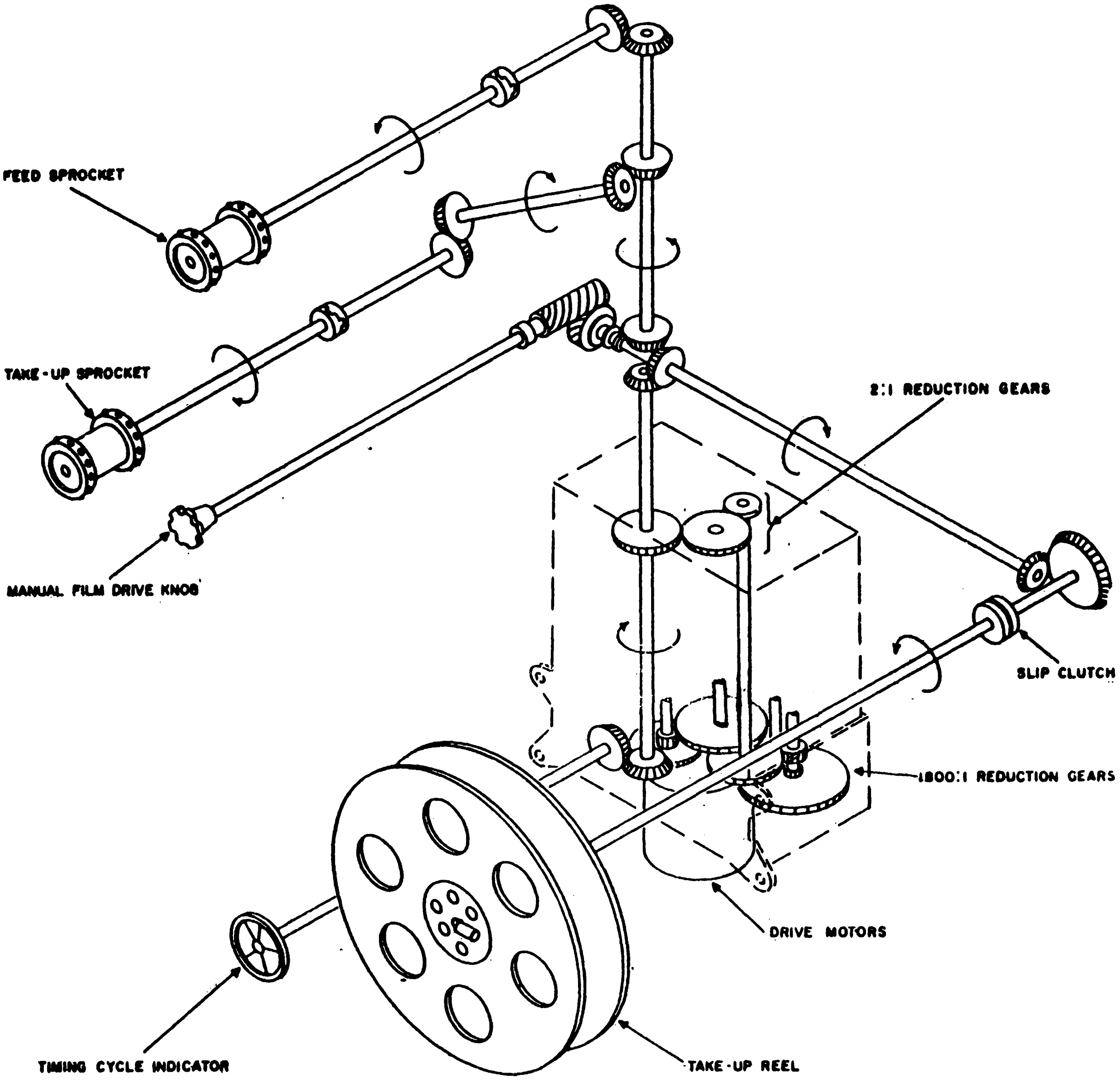

FILM DRIVE GEARING

4) The gate cover contains the film clamping and crimping mechanism and the projection lens mount.

5) Upper Section of Film Gate

    a) The upper section can be raised and locked in the up position by placing the gate hook (anchored to the top of the solenoid housing) over the pillar that is attached to the top of the magazine support.

    b) The clamping and crimping mechanism consists of two circular pads, a film-crimping bar, an actuator solenoid, a pressure bar, and springs. With the solenoid energized, the armature pivots about its spindle, off-setting the action of the solenoid spring and removing the load from the pads and crimper. These lift under the action of three return springs and allow freedom for the film during transport. When the solenoid is not energized, the solenoid spring pulls the armature about its spindle, applying a load of 24 pounds to the pressure bar. The pressure bar distributes the load to the crimping bar and pressure pads.

    c) The reproducer lens is secured in a threaded focusing mount with a knurled outer edge for manual adjustment. The focusing mount screws into the upper section of the film gate (over the reproducer aperture) and travels vertically when rotated, thereby focusing the image on the Command Post screen.

6) Lower Section of Film Gate

    a) The recorder (camera) aperture is a circular hole, in the lower section of the gate, that allows the film to be exposed to the image of the SD CRT.

    b) Chemical sprays from the jet unit must pass through the aperture in order to strike the film which rests flush against the aperture. A surrounding ring of compressed air also emerges from the space between the processing pot and the processing aperture. This ring of air forms a seal for the chemical sprays striking the film. It also

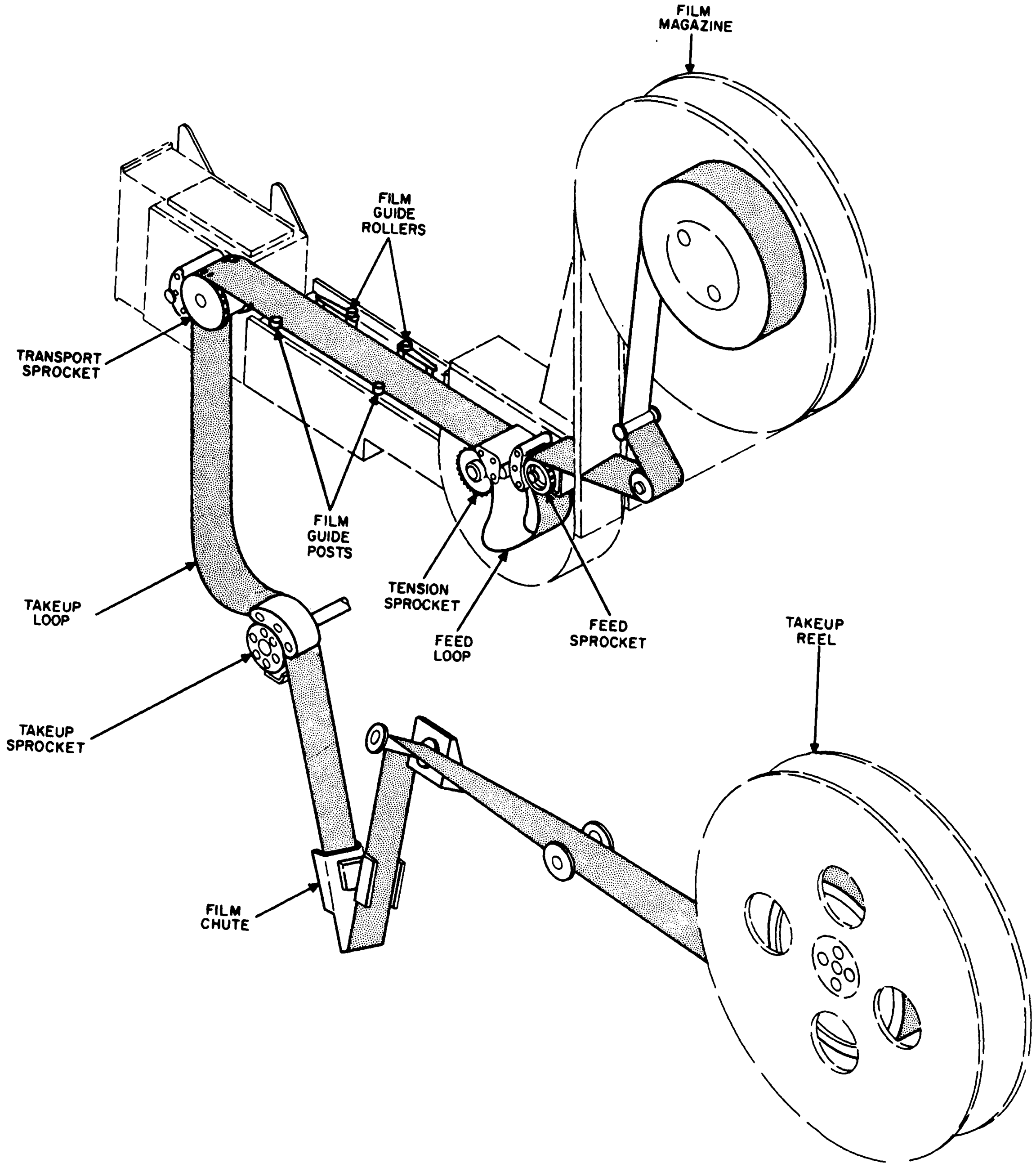

Figure 5–42. Overall Film Drive

ensures that the film is lifted from the edge of the pot as soon as the pressure is raised so that the damp, swollen emulsion is not torn from the film during transport.

c) The reproducer (projection) aperture has the two final condenser elements mounted at the top of the vertical conical bore. A polished aluminum mirror is seated in a 45-degree machined offset which is formed from the lower front corner of the gate casting. Light reflected from the mirror passes up through the aperture on its way to the film frame.

c. Overall Film Drive System

Refer to Page 3000

1) Film is drawn from the magazine (figs. 5-40 and 5-42) at a constant by a continuously rotating feed sprocket in the film gate. During the exposure periods, the film in the gate apertures is at rest, so that the unexposed film is pulled from the feed loop and through the gate by the action of the drive unit and accumulates in another loop as the takeup loop.

<u>Note</u>:
Fig. 5-42
Page 3020

2) When passing through the gate, the film is maintained at the proper tension by the action of a spring-loaded sprocket. If the film breaks, the tension sprocket releases and closes a switch. The FILM BREAK lamp and warning buzzer on the indicating panel then operate and a relay is energized, resulting in a cutting-off of processing fluids. With the chemical cut-off, dry air is blown continuously into the processing aperture.

3) The takeup loop is slowly reduced during the exposure periods by the rotation of a holdback sprocket which turns at the same speed as the feed sprocket.

After leaving the holdback sprocket, the film passes via a chute and guide rollers to takeup spool.

4) The motion of the driving sprockets and the takeup spool is derived from the main camshaft, which is part of the drive unit timing system. The sprockets used are of standard 35-mm design,

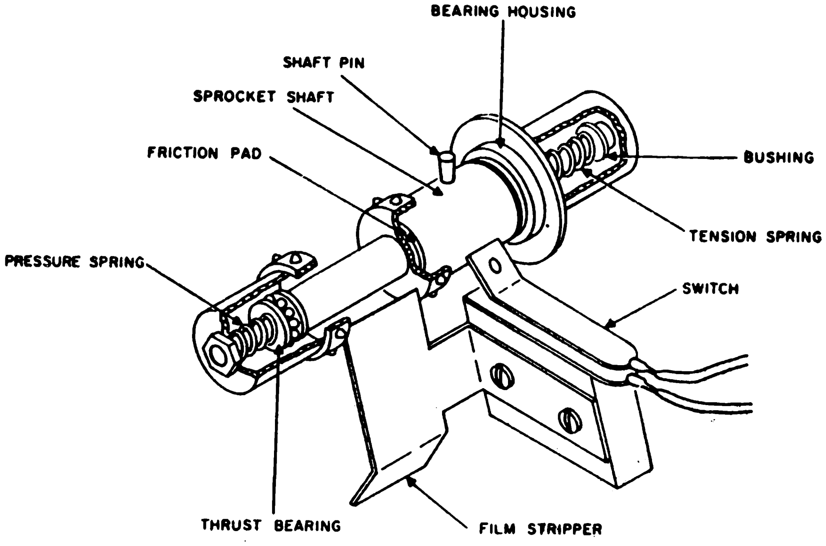

Figure 5–45. Tension Sprocket

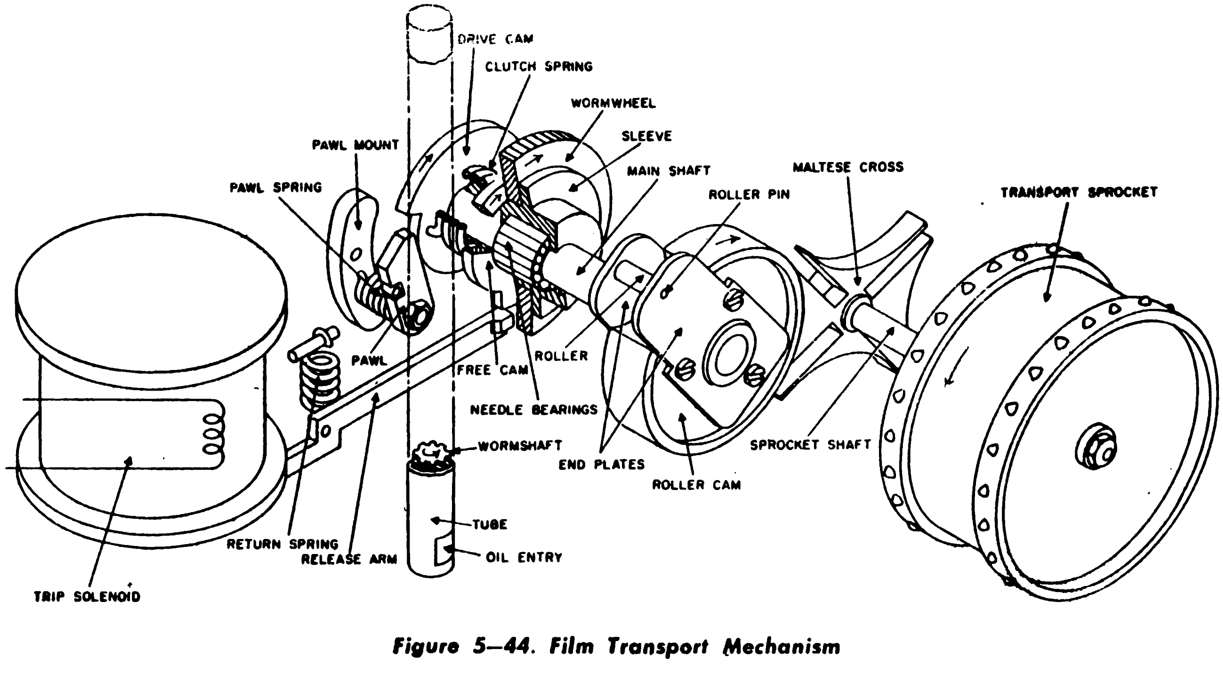

Figure 5–44. Film Transport Mechanism

and each has 20 teeth. Since each frame covers 10 film perforations, it follows that one rotation of the sprockets advances the film through two frames; the sprockets therefore turn at half cam-shaft speed. The gearing also drives the pointer of the cycle indicator at camshaft speed.

5) Provision is also made for turning the mechanism by means of a manual control, to facilitate film loading and setting-up. The manual control will turn the mechanism only in the normal direction, thus preventing the camshaft from being turned in reverse. Damage to the cam-operated contacts would result if it were possible for the manual control to be turned in either direction. The control is operated by a simple spring clutch coupling to the shafts. A dial pointer geared to the main camshaft provides a visual indication of the processing cycle position (figs. 5-40 and 5-43). For film loading, the manual drive is turned to the FILM LOAD position on the dial.

<u>Note</u>: Fig. 5-43
Page 3040

6) The film drive can be divided into two operating modes: the feed and takeup drive (continuous drive) and the film transport (intermittent pull) mechanisms.

7) Film Transport Drive

<u>Note</u>: Fig. 5-44
Page 3040

a) The film transport (figs. 5-40 and 5-44) provides the means of intermittently pulling the film frames through successive operational steps. The energy for this cyclic frame transmission is derived from a continuous-running electric motor. This motor drives a 40-tooth transport sprocket through an intermittent gearbox. The gearbox contains a clutch which is engaged at the correct instant by the action of a solenoid-operated release arm. The solenoid is actuated by the stored energy which accumulates in a bank of capacitors during the periods when the transport sprocket is at rest. The capacitor voltage is discharged by the film shift-timing contacts and applied to the solenoid.

8) Feed and Takeup Drive

a) The continuous drive system is powered by the 24Vdc shunt motor geared to a wormshaft and associated gears. The gearbox casting has a lubricating oil sump and a combination filler

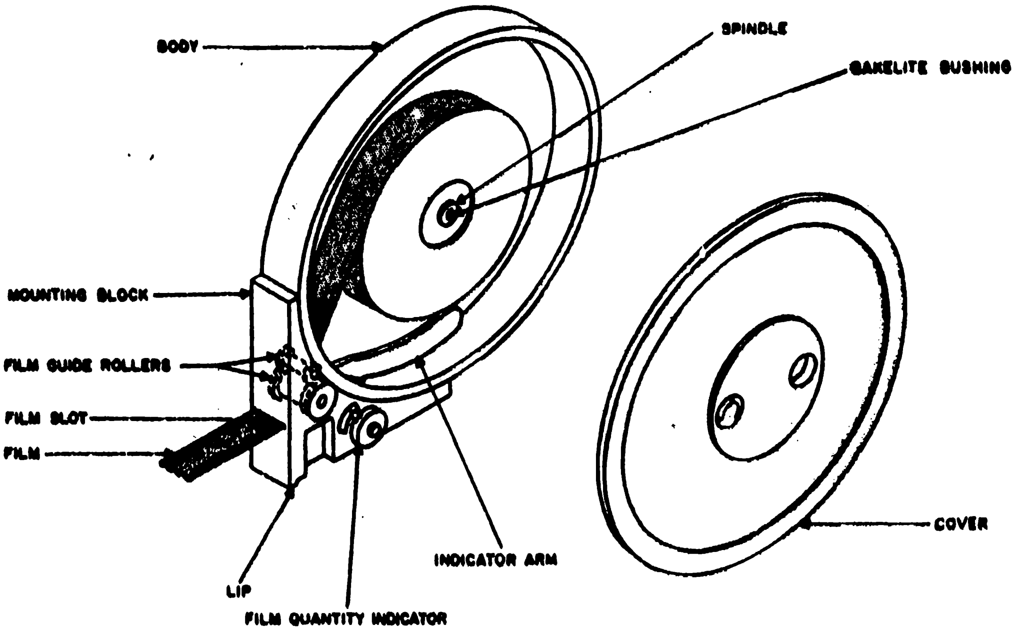
BODY
SPINDLE
BAKELITE BUSHING
MOUNTING BLOCK
FILM GUIDE ROLLERS
FILM SLOT
FILM
LIP
FILM QUANTITY INDICATOR
INDICATOR ARM
COVER

CASSETTE

plug-dipstick. The oil in combination with a screw-feed metering vent lubricates the Maltese cross, clutch springs, and cams.

b) A gear bolted to the main shaft retains a cam with a spring mounted on one end; the other end of the spring is tied to a cam-mounted sleeve. The free internal diameter of the spring is slightly less (about 0.005 inch) than the external diameter of the sleeve. The sleeve rotates in such a manner that it tends to wrap the spring about it, thus rotating the cam and the main shaft.

c) In quiescent periods, the arm which is loaded by the spring engages the cam tending to unwind and allow the sleeve to slip around inside it without turning the main shaft. This mechanism acts as a clutch, permitting the drive to slip and thus function, when not being pulled, as a free-running drive. When a pulse of energy is applied to the solenoid, the cam arm is released, enabling the spring to wrap tightly around the sleeve, carrying the cam and main shaft with it. In this manner, the motive force is produced that provides the intermittent drive for frame pulling and that drives the various shafts and sprockets concerned with the overall film drive. (See figure 5-44).

d. Film, Magazine, and Reels

1) The film used, a 35-mm, blue-sensitive, high-contrast type, is reeled from a magazine by the action of the feed sprocket. The film magazine consists of two major parts: the body and a light-tight cover. The body is composed of a cylindrical casting that forms the film-retaining chamber and a mounting block that is used for attaching the assembly to a bracket on the rear of the film gate.

Refer to Page 3060

2) Film-Low Warning

a) The magazine has a capacity of 2,000 feet of film but will normally be loaded with 1,000 feet. At the normal operating speed of two exposures a minute, 1,000 feet of film will last for approximately 48 hours of operation.

When the quantity of film in the magazine is reduced to about 30 feet, a microswitch is actuated, setting off the FILM LOW warning light, and an audible alarm, on the main control panel. (Refer to Logic 4. 8. 5 for circuit operation.)

b) When the magazine is being mounted on the gate, it is important that the knurled head screw be fully turned home so that the magazine is securely and properly locked. This must be done to avoid fogging of the film by stray light. The film-low warning circuit may not operate correctly if the knurled screw is not completely tightened.

3) Film Supply Indicator

a) Provision has been made to estimate the quantity of film remaining on the reel in the magazine. This is accomplished by means of a film supply indicator. The indicator has an arm, the free end of which may be turned against the outside of the film roll diameter. A pointer on an external knob indicates the approximate quantity of film remaining.

4) Magazine Reloading and Threading

a) Loading or reloading of a magazine is a simple operation which must be performed in a darkroom either in total darkness or with an approved safelight. Total darkness is recommended.

b) The film is threaded (fig. 5-40) by drawing the film from inside the feed-chamber entry slot across the chamber under the feed-and tension sprocket roller carriage and thread into the gate. The film is further drawn the length of the film gate, under the intermittent sprocket roller carriage and down under the holdback sprocket roller carriage, around the film chute and over the guide rollers to the takeup spool.

c) If the feed loop is made too large, it will rub on the bottom of the film feed chamber and result in scratched film. If made too small, it will jump off the sprockets and break the film.

5) Takeup Reel

a) The takeup reel (fig. 5-40) is a standard 35-mm spool that reels in the exposed film for storage. The drive for the takeup spool is from the main camshaft through gearing, and it is overdriven via a slip-clutch so that the film is spooled under tension.

e. Sprockets and Clamps

1) The various sprockets are part of the overall film drive system. The film is drawn both continuously and intermittently by rotating feed sprockets, and tension sockets maintain film control. Crimping and clamping devices serve to hold the film in registration and also serve as light baffles.

2) Tension Sprocket

a) The tension sprocket (fig. 5-45) is located in the film feed chamber in front of the film gate. It maintains the film in the gate at the correct tension while permitting a free feed loop to build up between it and the film feed.

<u>Note</u>: Fig. 5-45
Page 3040

3) Film Feed Sprocket

a) The film feed sprocket operates in conjunction with the film roller and film stripper. It rotates at half the camshaft speed, or 1 rpm. Its function is to pull the film from the magazine at a cyclic rate, leaving a loop of film in the feed loop chamber. This loop is partly taken up intermittently by the transport mechanism. A feed sprocket clamp bears against the film, holding it firmly against the feed sprocket. A film stripper, a piece of sheet metal of slightly

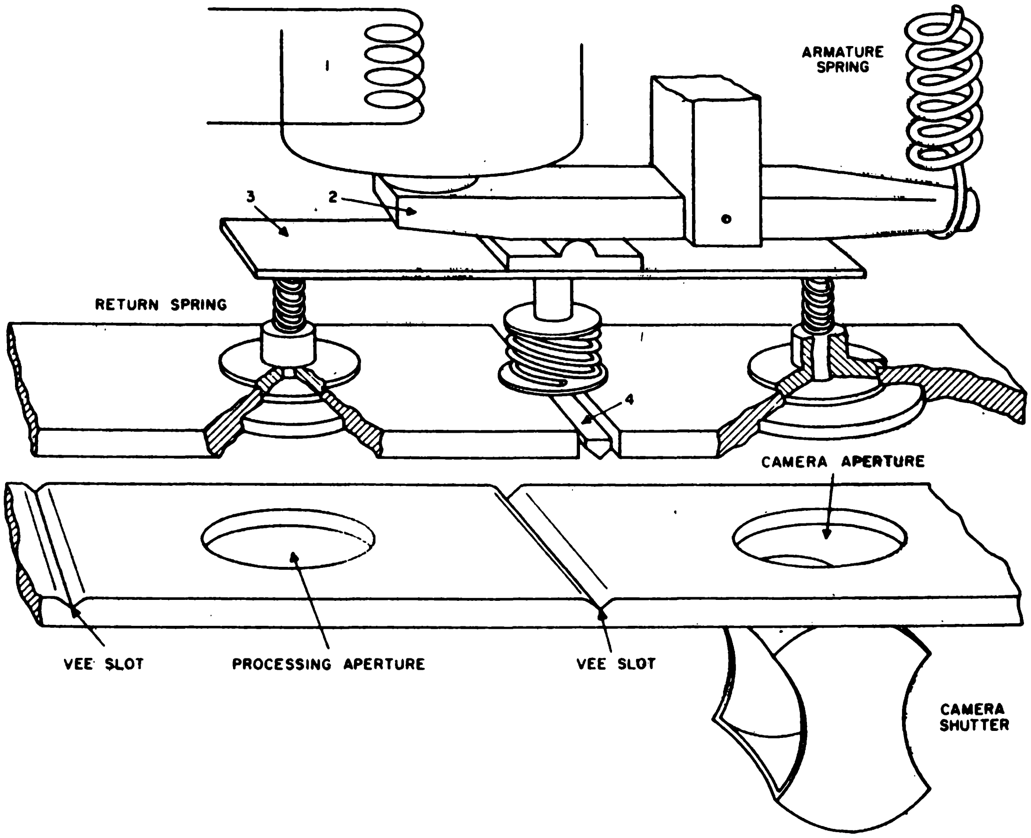

Figure 5—46. Clamping and Crimping Mechanism

less width than the sprocket, is placed between the sprocket teeth. It functions to lift the film away from the sprocket teeth during rotation to prevent the film from tearing or snagging.

4) Film Takeup Sprocket

a) The film takeup sprocket also rotates at half the camshaft speed. This sprocket pulls film at a steady rate from the takeup loop which is fed intermittently by the action of the transport mechanism. A sprocket clamp and film stripper similar to those of the feed sprocket are also used with the takeup sprocket. The film takeup reel rotates at a speed slightly faster than that of the takeup sprocket.

The action causes the film to be wound on the reel under tension. To prevent the film from tearing under too much tension, a slip clutch is installed on the takeup reel drive shaft.

5) Clamping and Crimping Mechanism

a) This mechanism is housed in the film gate cover, and it consists of two circular pressure pads and a crimper bar (fig. 5-46). It functions as a solenoid controlled, spring-operated lever device which clamps the film at the recorder and processing apertures and also performs the special function of crimping the film between the recorder and processing positions.

Refer to Fig. 5-46
Page 3100

b) The purpose of this crimp is to prevent light from the projection aperture from traveling through the film by multiple reflections, which would fog the film at the recorder and processing stations of the gate. The spring causes the film to be clamped and crimped during the whole of the exposure and processing time. It is released by the solenoid for film transport.

f. Film Transport Registration

1) The term "registration" denotes the accuracy with which successive frames of film are positioned. Ideally fixed objects on the display should remain relatively stationary when projected. There are primarily two types of registration.

   a) Lateral registration is governed by sidewise movement of the film in the gate. This movement is controlled by two compressive rollers keeping the film pressed against two pads.

   b) Longitudinal registration is the positioning of the film lengthwise in the gate after each film transport. It is positioned by the film back against the teeth of the intermittent sprocket.

2) Transport registration is carried out initially and from the time the intermittent gearbox and transport mechanism actuates the Maltese cross. From that point, relay-operated releases compensate for differences in manual operations and cyclic interruptions. The corrector mechanism and film longitudinal registration ensures that the Maltese cross sprocket and film perforation inaccuracies are compensated for, within 0.0015 inch.

3) Maltese Cross and Driving Cam

   a) The longitudinal registration of the film depends entirely on the accurate rotation of the Maltese cross mechanism and sprocket. The Maltese cross (fig. 5-44) is pinned to the sprocket shaft, which drives the film transport sprocket via the corrector mechanism. The cam is secured to the mainshaft by a taper pin. The periphery of the cam forms a bearing surface for the curved faces of the Maltese cross, preventing the cross from turning in quiescent periods.

   b) The cam makes one revolution each time the solenoid is energized, and the Maltese cross is driven through 90 degrees by the roller which engages in the slot presented to it (fig. 5-44).

2 RPM

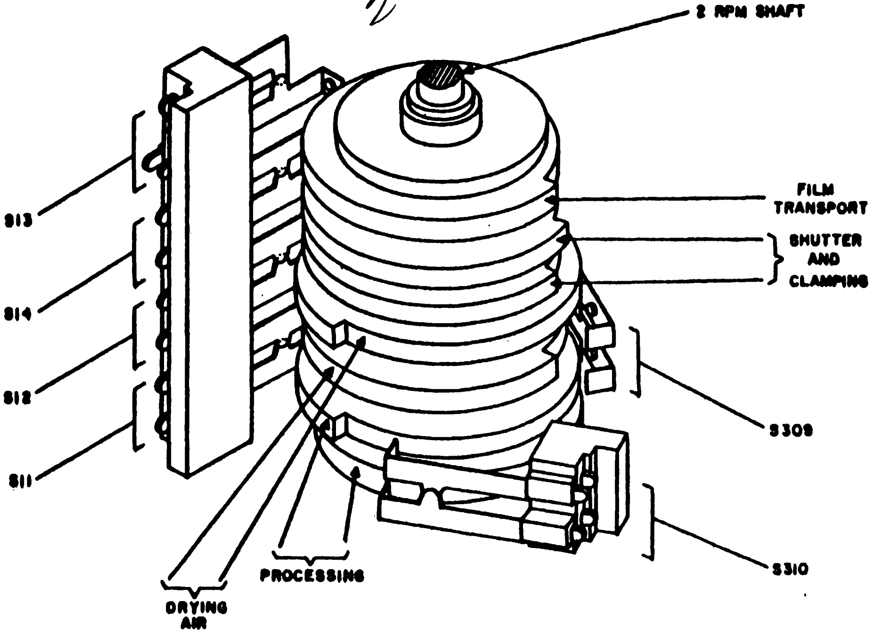

CONTROL CAMS AND SWITCHES

A cam corrector mechanism is employed to ensure that a 180-degree rotation of the transport sprocket is made accurately for any two successive film pulls. Transport of the film takes place in two distinct movements:

(1) The accurate pullback against the transport sprocket teeth, which is accomplished by the tension sprocket.

(2) Snatching of the film, leaving a free loop in the feed loop chamber.

4) Corrector Mechanism

a) The film registration at the gate must come within the design limits of /0. 0015 inch. Since the film perforation error is just within these limits, it follows that the movement imparted to the transport sprockets by the Maltese cross and cam must be precisely 90 degrees each time the solenoid is energized. A corrector mechanism within the transport sprocket is therefore employed to cancel out manufacturing tolerances in the Maltese cross and the transport sprocket.

b) The corrector plate is bolted to a flange on the sprocket shaft. Backlash between the sprocket and corrector plate is taken up by the action of a spring which is tensioned between an anchor pin on the sprocket and another anchor pin on the corrector plate projecting through a large hole in the sprocket.

7. Cam Controlled Circuits

Note: Refer to Fig. 5-47, Page 3170 and to Fig. (Cam Timing Chart) on Page 3160

a. Normal Operation Conditions

1) S-33 Processing Switch On
2) S-32 Jet Inspection "Off."
3) S-307 (Gatelock), S306 (Gate) (K 47-1) N/C closed, (K 46-2). N/C closed, (K 40-1) N/O closed by S-36 processing swtich and K40 will normally be picked.
4) K41 will normally be picked.

Cams shown on Page 3130

b. Timing Sequence

Refer to Fig. (Cam Timing Chart)
Page

c. Jet Inspection

1) S-32 on position allows the Field Engineer to inspect jets while film gate is open, by passes interlocks.

d. Transport Motor Overload

1) Picks RLA-1 which in turn raises film clamp and closes shutter through RLA-1 N/O contacts.

8. Alarms and Interlocks

Refer to Logic
4.8.5

a. Faulty display (K49) control at AC & W desk.

b. Chemical low (K43) 20 minutes of chemical remaining.

c. Waste blockage (K44) this alarm indicates the waste drain is blocked.

d. Film low (S305). This alarm indicates a film supply of 30 feet remaining (1 hour's supply) in the magazine.

e. Film break (S304) inhibits processing.

f. Gate open (K47) inhibits processing.

g. Lamp house cover interlock (S302) inhibits processing and the striking of the arc lamp.

9. Projection Section Controls

Refer to Page
2370

a. Main Control Panel

1) Arc lamp volt and ammeters

2) Alarm lamps (audible alarm reset switch).

3) Processing and projection air valves and gauges.

4) Expansion switch (S28 cntd., norm., expd., switch).

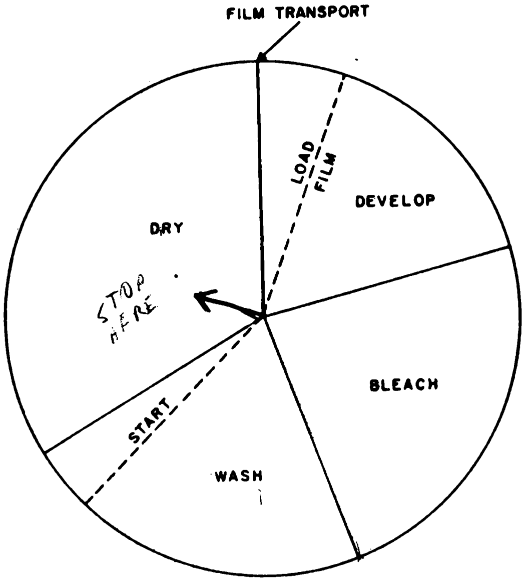

Figure 5—43. Timing Cycle Indicator

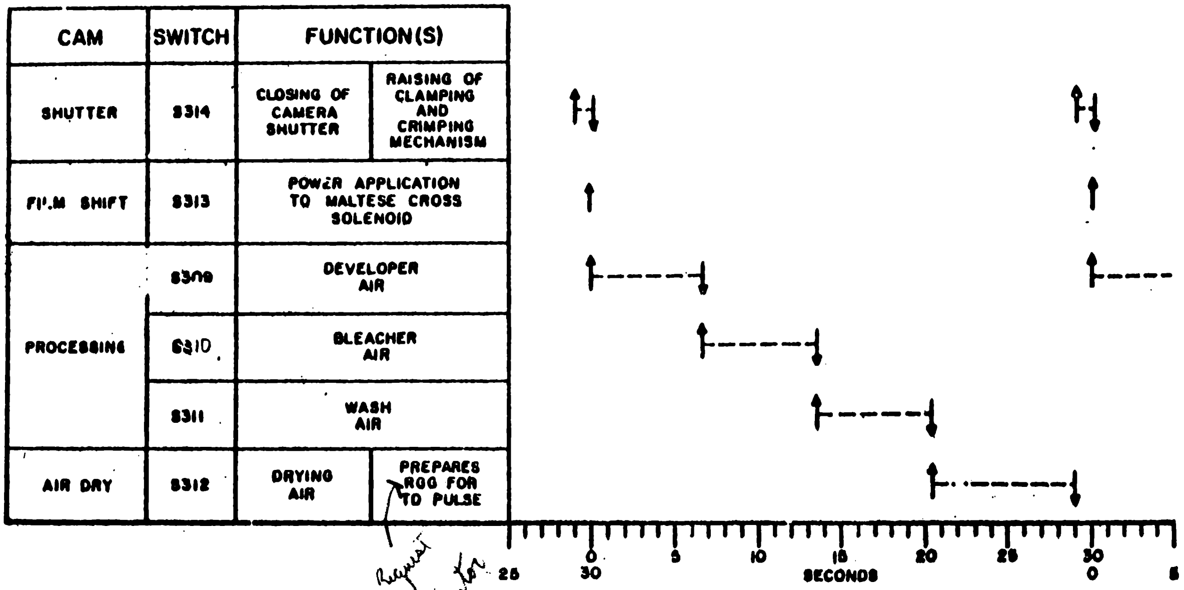

CAM	SWITCH	FUNCTION(S)	
SHUTTER	S314	CLOSING OF CAMERA SHUTTER	RAISING OF CLAMPING AND CRIMPING MECHANISM
FILM SHIFT	S313	POWER APPLICATION TO MALTESE CROSS SOLENOID	
PROCESSING	S309	DEVELOPER AIR	
	S310	BLEACHER AIR	
	S311	WASH AIR	
AIR DRY	S312	DRYING AIR	PREPARES RGG FOR TO PULSE

Request Gate Generator

NOTE:
↑ START OF OPERATION
↓ END OF OPERATION

Refer to P. 3230

TITLE: KELVIN - HUGHES CAM TIMING CHART

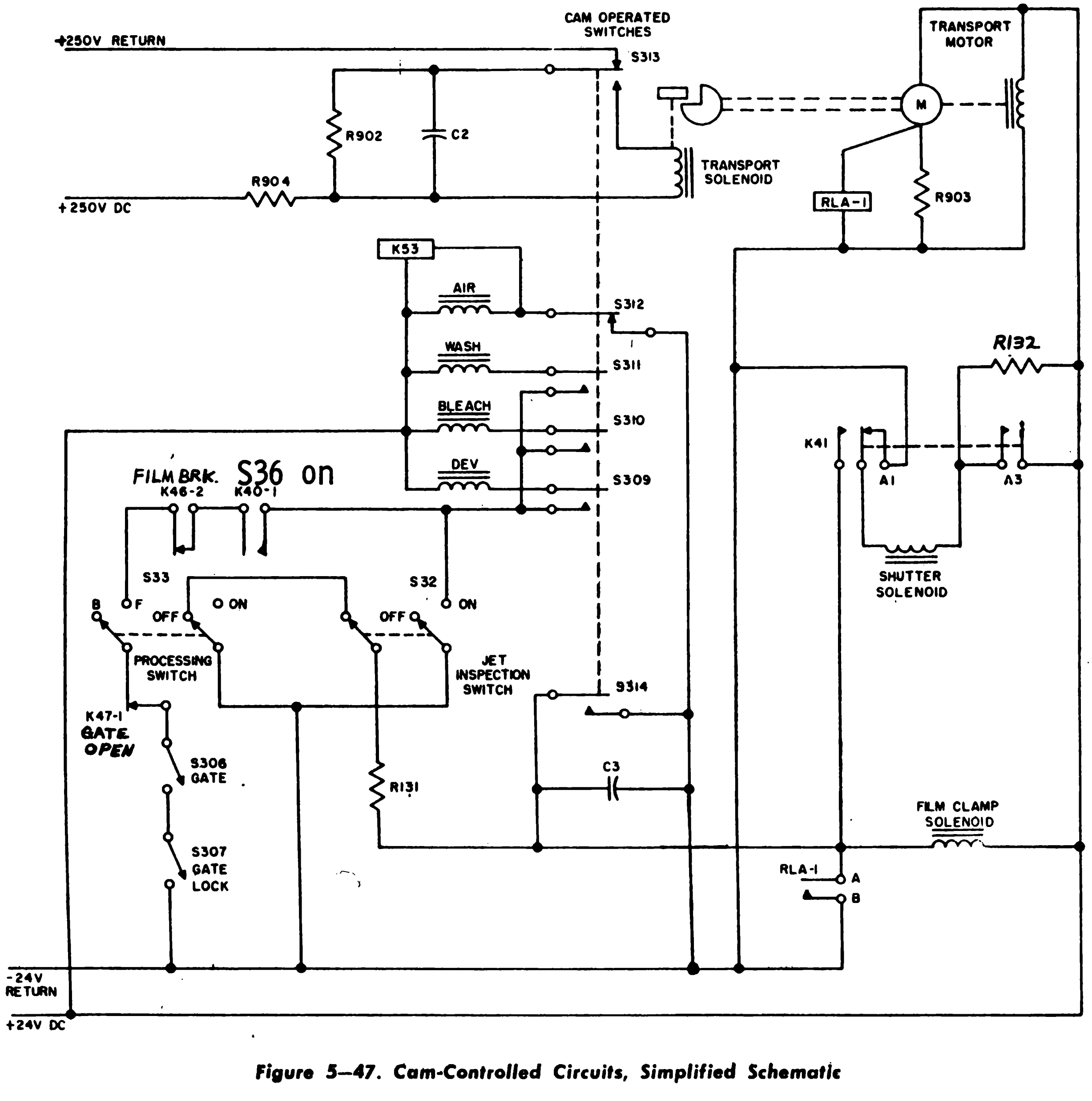

Figure 5–47. Cam-Controlled Circuits, Simplified Schematic

5) Category and expansion remote local switches.

6) Unit status switch.

7) Arc lamp. Do not strike indicating lamp.

8) Arc lamp strike lamp.

9) Equipment displaying lamp.

10) Horizontal and vertical off centering switches for expansion.

11) Processing on-off switch.

12) Feature swtiches (8).

13) Bright-dim switches (2).

14) Category switches (15).

b. Subpanel

Refer to Page 2380

1) Lamp on-normal-off switch S-39.

2) Drive motor on-off switch S-31.

3) Processing on-off switch S-32.

4) Jet inspection switch S-33.

5) Power position processing on-off switch allows the projection section to be energized with the unit status switch in the power position.

6) Continuous display - normal off switch. Allows continuous unblanking of the 7" CRT with the processing switch off.

10. Operation Procedure for PRRE

This procedure will cover the operation of the PRR without display section operating with just the projector section running with exposed film.

The second part will cover the operation of the projector with unexposed film with the situation display section operating.

The third part will list switches on the PRR with names and locations.

a. Operating the Projector with Pre-exposed film.

With all switches on the PRR in the "Off" position, toggles down, and the unit status switch in the "Off" position with the shutter pushed up, open the upper section of the film gate and remove the feed loop chamber cover. Feed the film from the film magazine to the film loop chamber through the film gate, around the sprockets and chute to the tape up reel.

After the film is placed in registration, replace the feed loop chamber cover and tighten down the upper section of the film gate. Power can now be turned on.

1) Power is applied to projector input.

2) Close the interlock cheater switch at the lower rear of the PRR.

3) Open the Processing and Projection compressed air valves until the indicators are in the green areas.

4) Place the unit status switch in the PWR position.

5) Three minute time delay. Place the lamp switch located on the subpanel in the normal position.

6) When the arc lamp voltmeter reads 120 VAC and the ammeter reads 0 amps, the arc lamp can be struck.

7) Depress the lamp strike button on the main control panel. When the amp meter reads between 20 and 28 amps and the voltmeter 0 volts, release the strike button. The lamp will take approximately 15 minutes to reach a normal current flow between 15 and 19 amps at 50 to 85 volts.

8) Place the drive motor and power position processing switches located on the subpanel and the processing switch located on the main panel to "On." The film drive should now be operating.

9) Pull down on the manual shutter to allow the light from the arc lamp to pass through the film and be projected.

   The film is now moving past the projection stage and being projected at a rate of one frame every 30 seconds.

10) To shut down the PRR

    a) Close the shutter
    b) Turn the processing switch on the main panel and the motor drive switch on the subpanel to the "Off" position
    c) Place the lamp switch in the "Off" position
    d) Power position processing switch in the "Off" position
    e) Unit status switch "Off"

    PRR is now down. Remove the film.

b. Operating the Projector with Unexposed Film

An 8 x 8 display is being generated by the simulation equipment in Area 10. All chemicals are in place and pinch cocks in the chemical flow lines open.

All switches on the PRR in the "Off" position.

1) Load the unexposed film magazine on the PRR feeding the film through the film gate and drive sprockets to take up reel.

2) Apply power to the projector

3) Open the compressed air valves on the main panel until air indicators read in the green areas.

4) Close the interlock cheater switch located at the lower left rear of the PRR.

5) Place the unit status switch in the active position.

6) Place the continuous display switch in the normal position. After a minutes delay, a presentation should be seen on the CRT through the 6X

magnifier or the peep hole.

7) Place the lamp switch in the normal position.

8) Arc lamp voltage should read 120 VAC.

9) Depress the lamp strike button and release when the lamp amp meter reads 20 to 28 amps, and the voltmeter reads 0 volts. The lamp has ionized when these values are indicated on the meters.

10) Place the motor drive and processing switches on (Subpanel).

11) Pull down on the lamp shutter to open.

12) Place the processing switch on the main panel to the "On" position. A normal machine cycle should now be taking place. Exposing the film, processing and projecting the images onto the screen.

13) To deactivate the PRR

    a) Place the processing switch on the main control panel to "Off" when the processing indicator is in the dry region.
    b) Close the shutter (push up)
    c) Place the processing, drive motor, and lamp switches on the subpanel to the off position.
    d) Place unit status switch to "Off."
    e) Turn the compressed air valves counter clockwise to stop air flow.
    f) Place all switches and circuit breakers on the power distribution cabinet to the "Off" position.
    g) Turn off the DC supplies.

14) When applying power to the Arc lamp the anemometer (air speed) indicator must be checked. The indicator is located on the front of the projector on the outlet pipe at the top of the unit. The anemometer indicates any air flow through the outlet pipe from the lamp housing.

The anemometer should start to rotate, not exceeding 9 minutes, after the lamp has been struck. The anemometer should be rotating maximum speed 15 minutes after the lamp has been struck.

If the anemometer does not start to rotate within the 9 minutes, shut off the power and make anemometer adjustments as outlined in the Maintenance Handbook, No. 15, Photographic Recorder Reproducer Element.

Incorrect adjustment of the anemometer may cause damage to the lens and lamp.

All power is now removed from the PRR.

If the Projector is not going to be used for any length of time, the chemical lines should be cleaned and flushed out with water. The water should be flushed through the lines with the projector running through its normal processing cycle for approximately 10 minutes.

15) Maintenance of chemical jets

Under normal operation, processing will not take if the film gate is open. For maintenance the film gate interlock can be bypassed with placing the jet inspection switch located on the subpanel to the "On" position.

This switch should not be used unless a piece of clear plastic is placed over the processing pot to restrict the chemicals. This piece of plastic is in the lower portion of the projector tool box.

With the plastic in place and the motor drive and main processing switches in a normal processing cycle will take place with the chemicals and air striking the piece of plastic covering the processing pot aperture. By observing the plastic, the chemical and air jets are checked.

PHOTOGRAPHIC RECORDER REPRODUCER

Switch Locations

Switch #	Location	Logic	Name
S1-S15	Main Panel	4. 8. 1	Category Switches
S16-S19	Main Panel	4. 8. 1	Feature Switches
S21-S24	Main Panel	4. 8. 1	Feature Switches
S20	Main Panel	4. 8. 1	FSS #1 Bright Dim Switch
S25	Main Panel	4. 8. 1	FSS #2 Bright Dim Switch
S26	Main Panel	4. 8. 1	Category Local Remote
S27	Main Panel	4. 8. 1	Expansion Local Remote
S28	Main Panel	4. 8. 2	CNT-Normal-Exp. Switch
S29	Main Panel	4. 8. 6	Unit Status Switch
S31	Sub Panel	4. 8. 5	Drive Motor
S32	Sub Panel	4. 8. 5	Jet Inspection
S33	Sub Panel	4. 8. 5	Processing
S34	Sub Panel	4. 8. 6	Power Position Processing
S35	Sub Panel	4. 8. 5	Continuous Display (Normal-Off)
S36	Main Panel	4. 8. 5	Processing
S37	Main Panel	4. 8. 5	Alarm Reset (Buzzer Off)
S38	Main Panel	4. 8. 5	Strike Button
S39	Sub Panel	4. 8. 5	Lamp
S45	Sub Panel	4. 8. 3	SD Test Pattern
S46	Sub Panel	4. 8. 4	Driver Emission Check Switch
S47	Sub Panel	4. 8. 4	Driver Filament Voltage Switch
S51	Sub Panel	4. 8. 4	Decoder Test 1
S52	Sub Panel	4. 8. 4	Decoder Test 2
S53	Sub Panel	4. 8. 2	Deflection Amplifier Test
S54	Sub Panel	4. 8. 2	Key Release Off Center
S56	Lower Left Rear Cover	4. 8. 6	Interlock Switch
S57	Lower Right Rear Cover	4. 8. 6	Interlock Switch
S58	Lower Left Front Cover	4. 8. 6	Interlock Switch
S59	Lower Center Front Cover	4. 8. 6	Interlock Switch
S60	Lower Right Front Cover	4. 8. 6	Interlock Switch
S61	Left End Right Cover	4. 8. 6	Interlock Switch
S62	Left End Left Cover	4. 8. 6	Interlock Switch
S63	Upper Right Rear Cover	4. 8. 6	Interlock Switch
S64	Upper Left Rear Cover	4. 8. 6	Interlock Switch
S65	Right End Left Cover	4. 8. 6	Interlock Switch
S66	Right End Right Cover	4. 8. 6	Interlock Switch
S67	Lower Right Rear Cover	4. 8. 6	Interlock Cheater

Switch #	Location	Logic	Name
S71	Right End Right Panel	4. 8. 2	Contracted Area Assignment
S72	Right End Right Panel	4. 8. 2	Expand Scale Selector
S73	Right End Right Panel	4. 8. 2	X Area
S74	Right End Right Panel	4. 8. 2	Y Area
S300	Located within Chemical heater	4. 8. 5	Thermal Switch
S301	Projector Panel-Film Gate	4. 8. 5	Shutter Switch
S302	Projector Lamp Housing Cover	4. 8. 5	Lamp Housing Safety Switch
S303		4. 8. 5	Air Pressure Switch
S304	Film Feed Loop Chamber	4. 8. 5	Film Break
S305	Magazine	4. 8. 5	Film Supply
S306	Film Gate	4. 8. 5	Gate
S307	Film Gate	4. 8. 5	Gate Lock
S308	Film Gate	4. 8. 5	Gate Clamp
S309	Cam Switch	4. 8. 5	Develop
S310	Cam Switch	4. 8. 5	Bleach
S311	Cam Switch	4. 8. 5	Wash
S312	Cam Switch	4. 8. 5	Air
S313	Cam Switch	4. 8. 5	Film Shift
S314	Cam Switch	4. 8. 5	Shutte and Clamp
S320	Magazine	4. 8. 5	Film Low
E700	Chemical Constant Level Chamber'	4. 8. 5	Chemical Low
E701	Chemical Constant Level Chamber	4. 8. 5	Chemical Low
E702	Chemical Constant Level Chamber	4. 8. 5	Chemical Low

F. Summary Questions

1. True or False:

   a. The PRRE uses a 7" CRT. T
   b. There is no difference between the 19" CRT and the PRRE CRT except size. F
   c. The request gate generator will cause the CRT unblank for 2.5 sec. every 30 seconds for RD and TD messages. T
   d. Cat switches on the PRR will override the command post remote switches.
   e. The display diameter per frame of film is .8 inches. T

2. Relay K-39 is the PRRE control circuitry is controlled by what?

3. Under normal operation, the request display gate generator will provide an ________________ every__________seconds. This is at the time cam operated K-53 is__________________.

4. The film is clamped and crimped by the film gate mechanism when the film clamp solenoid is____________________.

5. If the shutter solenoid stays energized, the film will be:

   a. Unable to advance and be overexposed.
   b. Advance properly but shutter will not close
   c. Underexposed
   d. Not exposed at all.
   e. Film will not be developed.

6. The main purpose of K33 in the PRRE switch-over circuit is:

   a. Allow path for K117 to be energized
   b. When energized, normally closed contacts open and de-energized K117
   c. Will not allow both projectors to be displaying on screen at same time.
   d. Prevent opening of S1 shutter
   e. Prevent opening of S1 shutter.

7. What will be the result of opening capacitor C-1 in the arc lamp circuitry?

   a. Overloading of T1 secondary.
   b. No path for RF frequency to ground.
   c. Overloading of arc lamp.
   d. Normal operation except that arc lamp intensity somewhat lower.
   e. Arc lamp won't light.

8. What relay contacts hold K117A energized while projector A is projecting?

   ____

9. True or False:

   ________a. The time required for one complete cycle of operation is 30 seconds.
   ________b. Energizing the Maltese Cross solenoid causes the film to shift.
   ________c. The Transport Sprocket moves continually under normal operation of the PRRE.
   ________d. The Feed Sprocket is caused to rotate by energizing the film transport motor.
   ________e. Energizing the switch on the Tension Sprocket gives an indication of a broken film.

10. K33B of switchover circuit will not pick this will result in:

    a. Normal operation when switching from projector B to projector A.
    b. Projector B will never project a display on the screen.
    c. Projector A will never project a display on the screen.

- d. Normal operation when switching from projector A to projector B.
- e. None of the above.

11. All indicators normal, but film is underdeveloped. What could be a probable trouble?

    - a. Processing air valve broken off from air tubing.
    - b. The developer pinch cock turned too far clockwise.
    - c. The developer pinch cock turned too far counter-clockwise.
    - d. Drain stopped up/
    - e. Leak from the bleach's constant level chamber.

12. The projected display is normal at the beginning but slowly darkens. What could be a possible trouble?

    - a. Interlens mirror maladjusted.
    - b. Parabolic mirror slipped out of place.
    - c. Fourth condenser lens missing.
    - d. Take up sprocket slowed down to 1 revolution per minute.
    - e. A hole in the projection air tubing.

13. The expansion switch in the expanded position and S74 in position 5-11. The C wiper arm of the switch does not make contact. S73 operates normal. On the expanded X8, which areas can be selected?

    Refer to Page 2590

    - a. Y = 3, 4, 5, 6, 7
    - b. Y = 5, 7, 8, 9, 10
    - c. Y = 4, 8, 9, 10, 11
    - d. Y = 6, 7, 8, 9, 11
    - e. Y = 5, 6, 9, 10

14. "Remote Local" switch is in remote position. Faulty display indicator light will not light.

    - a. K-42 will not pick
    - b. K-55 will not pick
    - c. S-28 is in normal position
    - d. K-49 will not pick
    - e. S-28 is in the expanded position.

X. Command Post Console

A. Purpose

1. The Command Post console provides observation and control positions for the sector commander and his staff. These officers are responsible for directing and co-ordinating air defense operations at the Central. Tactical summaries of the air defense situation and supplementary data are made available to these officers, who evaluate the material and act upon it. Facilities at the Command Post console provide the means for implementing the action.

B. Command Post Console Assignments

1. The console consists of a command desk abutted on either side by two staff desks. Each desk has accommodations for two control positions. The positions and their designations are indicated in table 5-13, and the station locations are shown in figure 5-54.

<u>Note:</u> Fig. 5-54,
Page 3310
Table 5-13
Page 3310

C. Location

1. The Command Post console is located on a balcony in the command area of the Direction Central. A cross-sectional view of the sector command area and a portion of the floor plan of the balcony area (command level) is shown in figure 5-1. (The cross-sectional sketch is a tentative-plan view. It is subject to change to meet the varying conditions of each site). The figure illustrates the console installed at the edge of, and conforming to, the shape of the balcony for maximum operative visibility. The console faces a large projection screen to enable the operators to view the situation display. Tactical summaries of the air defense situation, in the form of situation displays, are projected on the projection screen for the Sector Commander and his staff. The situation display is projected from the PRR, which is in the room above the balcony.

<u>Note:</u> Fig. 5-1,
Page 2290

D. Situation Display Consoles in Command Post

1. There are seven situation display consoles, located behind the Command Post consoles, as shown in figure 5-55. The SD consoles provide additional situation displays used by the Sector Commander and his staff to supplement the situation displays presented on the projection screen. Each one of these SD consoles will have assigned to it, according to function location, specific data pertinent to the assigned console position.

Note: Fig. 5-55, Page 3310

E. Command and Staff Desks

1. The five desks, one command and four staff, provide command operating control and position for key personnel.

2. Configuration

   a. The command and staff desks are similar in construction. They are equal in size and have a front-rear taper so that when arranged side by side, the desk sections approximate the floor cut of the balcony edge. A down-ward sloping top enables the Sector Commander and his staff to observe the display on the projection screen over the tops of their desks, while seated. The facilities at each staff desk are largely duplicated, since each desk has accommodations for two operating positions. In the overall appearance, the command and staff desks differ in that the single command desk contains three centrally located DDIS's, whereas each staff desk contains one DDIS at the left of each operating position.

   b. The DDIS's divide the front panels into two equal sections, separating the two positions.

3. Front Panel

   a. The front panel of each position is designed to accommodate 13 standard (1-1/2 inches wide) panel modules, 4 telephone modules, and 1 alarm module.

TABLE 5–13. COMMAND POST CONSOLE POSITIONS, UNIT 250, AN/FSQ-7 AND -8

DESK STATION LABEL	ABBREVI-ATION	*STATION LOCATION
Combat Intelligence Officer	CIO	C50
Meteorology Officer	MET-O	C51
Communications & Electronics	C & E	C52
Aircraft Control & Warning	AC & W	C53
Sector Commander	SC	C54
Director of Operations	DO	C56
Fighter Officer-Interceptors	FO-1	C57
Fighter Officer-Missiles	FO-M	C58
Anti-Aircraft Officer ARMY	AAO	C59
Spare Staff		C60

**Prefix station locations with letter "S" for AN/FSQ-8.*

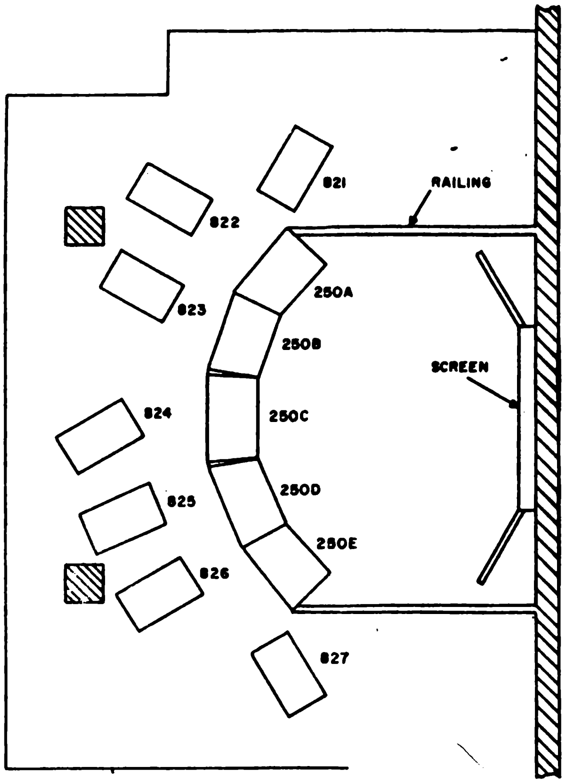

Figure 5–55. Sector Command Balcony Area, Partial Floor Plan

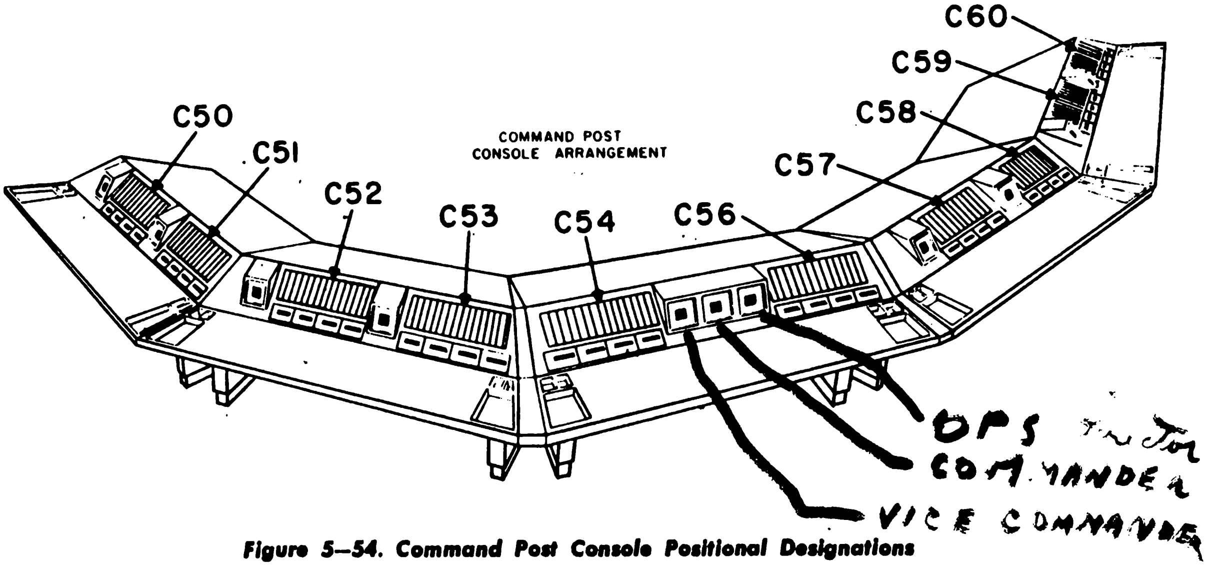

Figure 5–54. Command Post Console Positional Designations

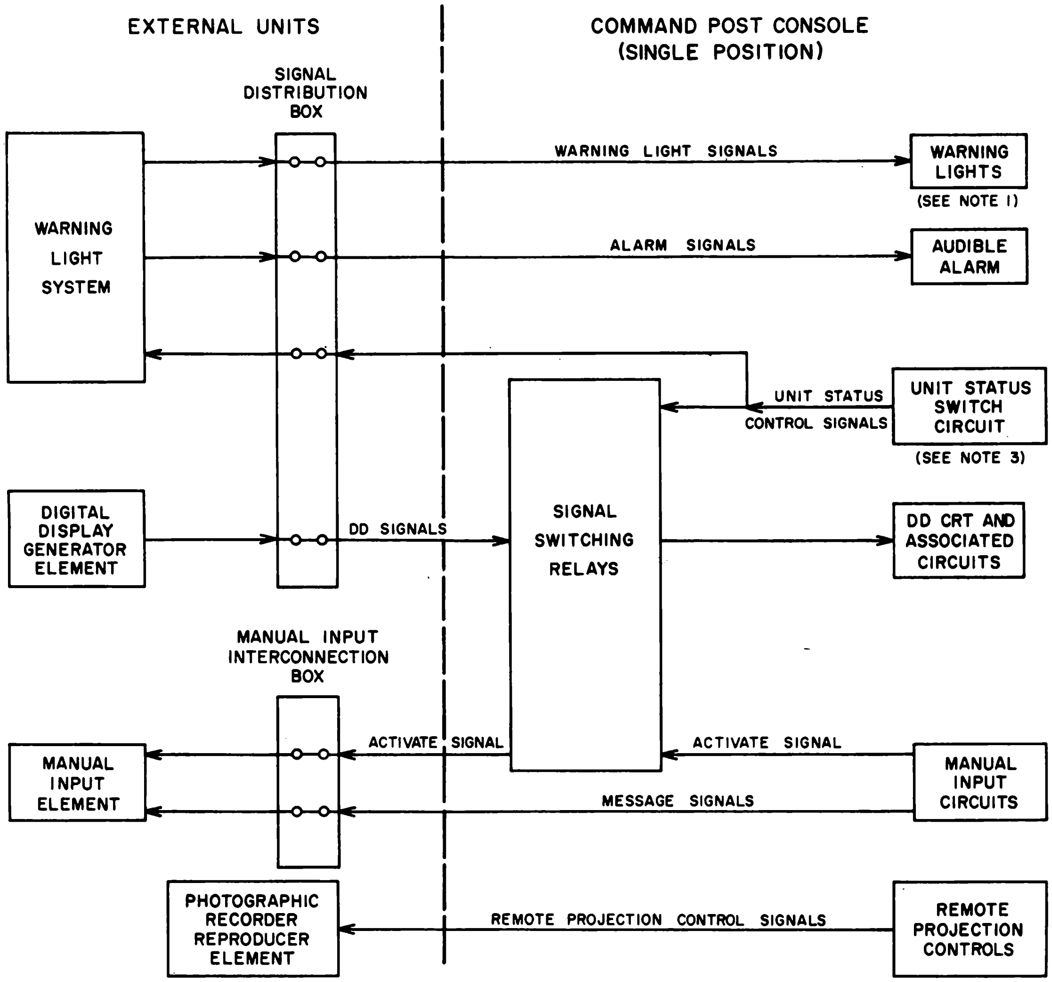

NOTES
1. FOR STATION NUMBER C52 (C AND E POSITION) ONLY
2. FOR STATION NUMBER C53 (AC AND W POSITION) ONLY
3. COMMON TO STATION NUMBERS C54 AND C55 (SCC POSITION)

Figure 5–57. Command Post Console Position, Simplified Flow Diagram

Provisions are also provided for a UNIT STATUS switch, a DD ERASE button, and a dimmer control for panel illumination. The front panel is hinged so that it can be secured in the open position for maintenance.

4. Shelf

   a. The shelf serves as a readily available working desk area. It is removable to allow for ease of maintenance and to permit access to components located beneath the front panel. Each end of the shelf is recessed and contains a telephone handset, an optical pointer, an ash tray,and a cigar lighter.

5. Bright and Dim Controls

   a. Separate illumination controls are provided for each position of a desk: a panel light control for panel illumination and a dimmer control to limit desk illumination. The dimmer control is mounted directly on the desk lighting fixtures.

F. Logical Relationship of Command Post Console to Direction Central

1. Besides containing DDIS's that are logically part of the Display System, the Command Post consoles include circuits that are logically associated with other systems. A representative block diagram for a single position of the Command Post console and external units is illustrated in figure 5-57. The diagram shows the relationship of warning lights and audible alarms to the Warning Light System and the association of manual input circuits with the MI element of the Input System. Warning Lights and alarm signals, as well as DD signals from the DDGE, pass through the Display System signal distribution box. The signals from the manual input circuits pass through the manual input interconnection unit.

<u>Note</u>: Fig. 5-57
Page 3320

2. The audible alarm, UNIT STATUS switch, DD CRT circuits, and manual input circuits are common functions of each position at a command or staff desk.

3. Unit Status Switch Circuit

   a. The unit status switch circuit, controlled by the UNIT STATUS switch at each position, regulates the flow of signals between positions and external circuits. The UNIT STATUS switch operates internal and external signal-switching relays. (The signal-switching switch at the Sector Commander's position controls two of the three DD CRT's and associated circuits of the command desk.)

4. DD CRT and Associated Circuits

   a. Each DD CRT and associated circuits make up a DDIS. The DD CRT is a specially constructed 5-inch CRT, which is part of a DD unit that also contains the CRT adjustment controls and circuits. An associated unit and a DD intensification unit for each CRT unblank the CRT when a particular DD message is to be displayed at a specific position.

      Refer to Page 3350

      The associated DD circuits also include two high-voltage power supplies at each desk. The power supplies are shared by the two DDIS's of a staff desk and by the three DDIS's of the command desk. Each power supply is a separate unit.

5. Manual Input Circuits

   a. Each position of the Command Post console is equipped with various manual input pushbutton modules which are used to send messages to the Central Computer System. The messages can consist of specific instructions, orders, or requests for information.

   b. A message is prepared by depressing one or more pushbuttons on the MI modules. A pushbutton can represent a complete message or a part of a message. The function that each pushbutton performs is indicated by labeling or other means of identification. After a message is complete, the ACTIVATE pushbutton is depressed, signaling the CCS to take action on the message requested.

3350

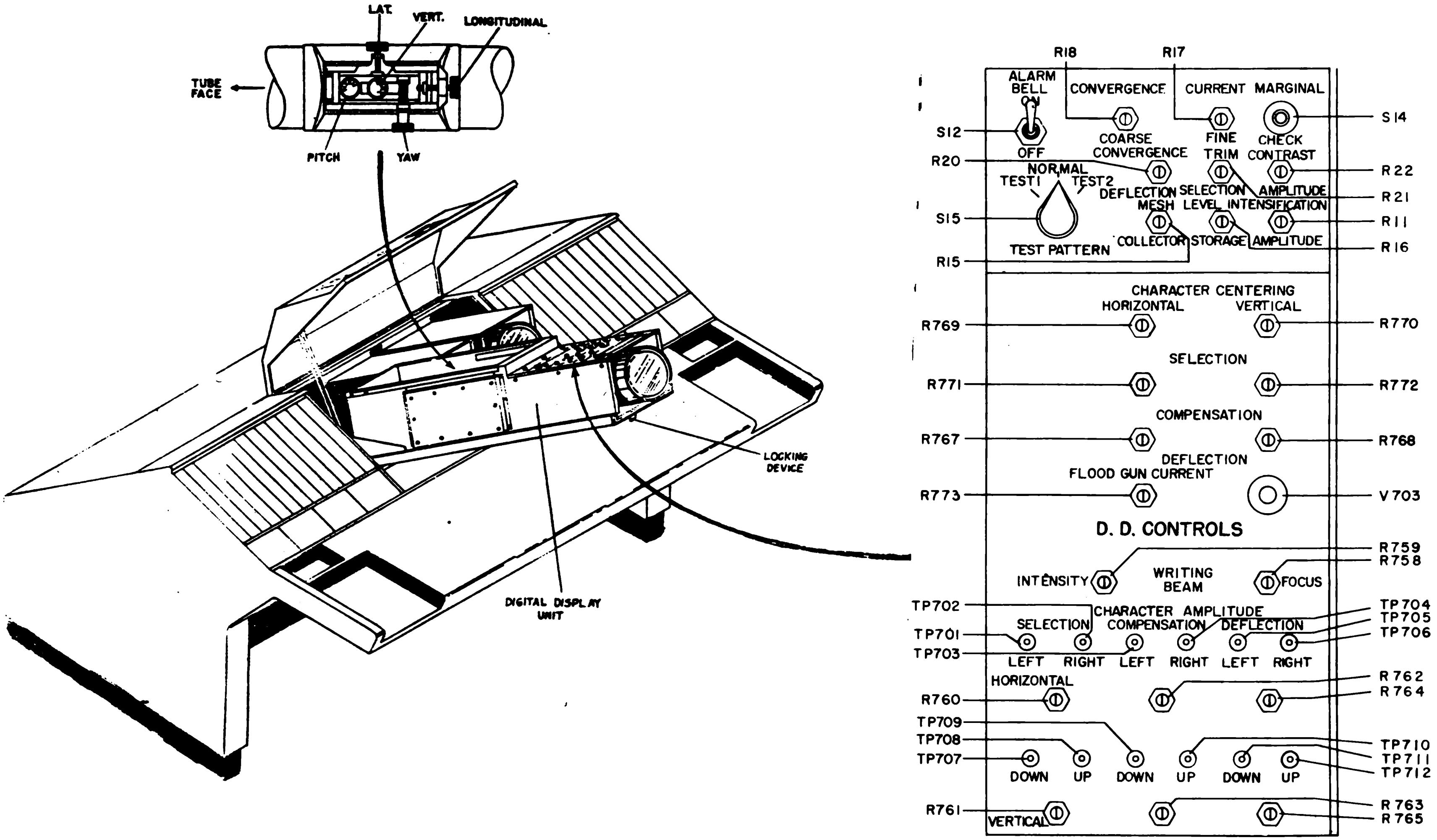

Digital Display UNIT CONTROLS

6. Audible Alarm Circuit

   a. The audible alarm circuit notifies a member of the sector command that a condition at his position requires his attention or that some action by him is required. When an audible alarm is received, a bell is activated and, in addition, two neon lights on the audible alarm module are energized. One of the lights is a flashing light which is connected to a flashing mechanism. The same flashing mechanism is also connected to the bell to provide an interrupting ring. The bell can be inactivated by means of a disabling switch which is available to maintenance personnel.

   b. The bell and flashing light are extinguished when a RESET pushbutton on the audible alarm module is depressed. The other neon light can be shut off only by the Central Computer System, usually after receipt of an appropriate message from the position involved.

7. Telephone and Communication Facilities

   a. The telephone and communication facilities are not included in the block diagram for a single position of the Command Post console (fig. 5-57) because they are part of the Telephone and Intercommunication System completely independent of the Central Computer System and associated systems. Both tactical and maintenance lines are brought to each desk. The tactical facilities permit the Sector Commander and his staff to communicate with other personnel inside or outside the Direction Central. The maintenance lines enable maintenance personnel to call various maintenance areas of the Direction Central directly.

   b. The telephone switching module (or modules) is installed in a lower section of the front panel for each position. This module contains 18 pushbuttons, with associated indicator lights and labels, and 4 auxiliary pushbuttons which provide feature such as hold, transfer, conference, etc. If additional facilities are required, a blank module can be replaced by a special telephone module to provide six additional pushbuttons. The direct intercommunication facilities provided by these modules supplement the automatic telephone dialing system available at each desk position.

c. Two types of telephone jacks, one type for maintenance and the other for staff communication, are located on each desk leg. The maintenance jacks are mounted on the inside of the right leg of each desk. The staff communication jacks are located on the front of each desk leg.

G. Special Functions

1. The remote control of the photographic recorder-reproducer element and the warning lights are special function circuits on the Command Post Console.

2. Remote Control of the Photographic Recorder-Reproducer Element (PRR)

a. The projected displays appearing on the projection screen in the sector command area are produced by a photographic recorder-reproducer element (PRR) located in the projection room. Limited control of the projected displays is provided by pushbutton modules on the front panel of the AC & W desk position. The pushbutton modules are inoperative under either of the following conditions:

1) The UNIT STATUS switch at the AC & W position is set to the OFF or AC positions.

2) Two switches located on the projector element are set to the LOCAL position.

3. Warning Lights

a. A warning light module, containing 10 neon lights, is installed on the front panel of the C & E position. This module indicates to the C & E Officer various equipment troubles on the Direction Central.

H. Optical Pointer

1. The optical pointer is a small pistol-shaped, hand-held device employed as a lecture pointer. That is, it is used to call attention to specific parts of the projected display by means of a small arrow head (or any other like symbol). When the trigger is pressed, the indicating symbol is optically projected from the pointer and superimposed on any desired part of the large screen display.

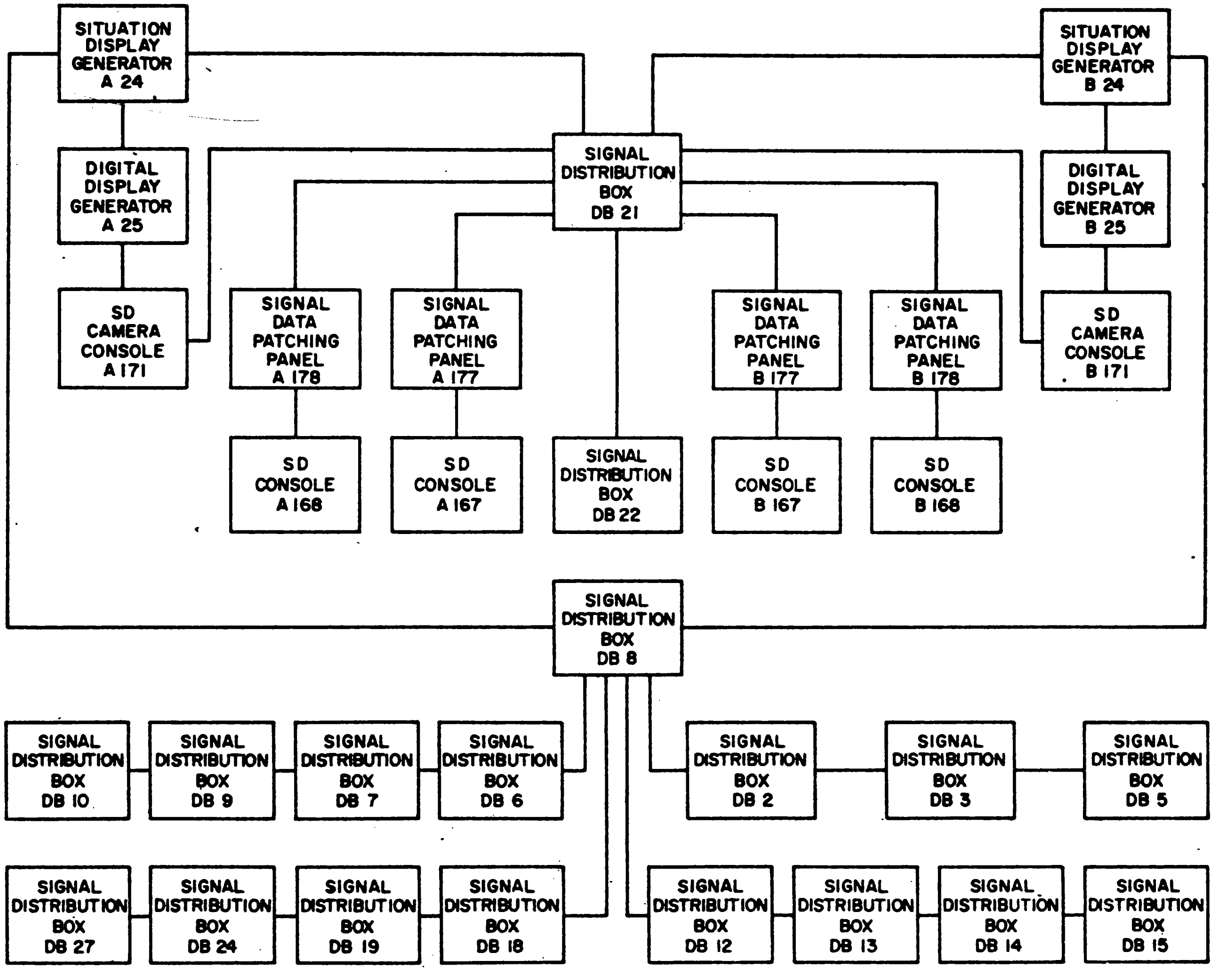

Figure 5—58. Signal Distribution Element, Block Diagram

2. The pistol-trigger switch actuates an incandescent lamp that is excited from a 6.3-volt supply. The light thus produced is passed through an aspheric lens that condenses and shapes the input to a concentrated beam. The light beam, in turn, is extruded through a preformed, arrow-shaped cutout (or stencil). The arrow-formed beam is passed through a large-aperture projection lens to the beaded screen, where it can be swept to any desired placement. The projection lens is provided with a focusing mount to compensate for varying projected distances to the screen.

I. Associated SD Equipment

The associated SD equipment consists of the projection element (PREE) and the SD consoles. These elements receive their data from the SDGE.

2. The PRRE contains a modified SDIS, a camera and film-processing section, and a projector unit. The camera takes periodic photographs of the SD data appearing on the viewing screen of the SD CRT. The exposed film is then automatically processed. After processing, the SD data is projected on the large projection screen and examined by the Sector Commander and his staff. The selection of the SD data to be projected can be controlled either locally or remotely from the AC & W position of the Command Post console.

XI. Distribution Element

A. Distribution Boxes

1. Function

a. Signal distribution boxes are used at many locations in the Display System to route signals to the various consoles. These boxes form the major portion of the signal distribution element (see fig. 5-58). The signals routed through the distribution boxes are light gun outputs, warning light signals, and trunk cable signals. The light gun outputs are applied to the manual data input element (unit 23). The warning light signals are supplied by the warning light interconnection unit (unit 91), and the trunk cable signals are supplied by the SDGE (Unit 24); both of these signal groups are fed to the associated consoles.

Note: Fig. 5-58
Page 3380

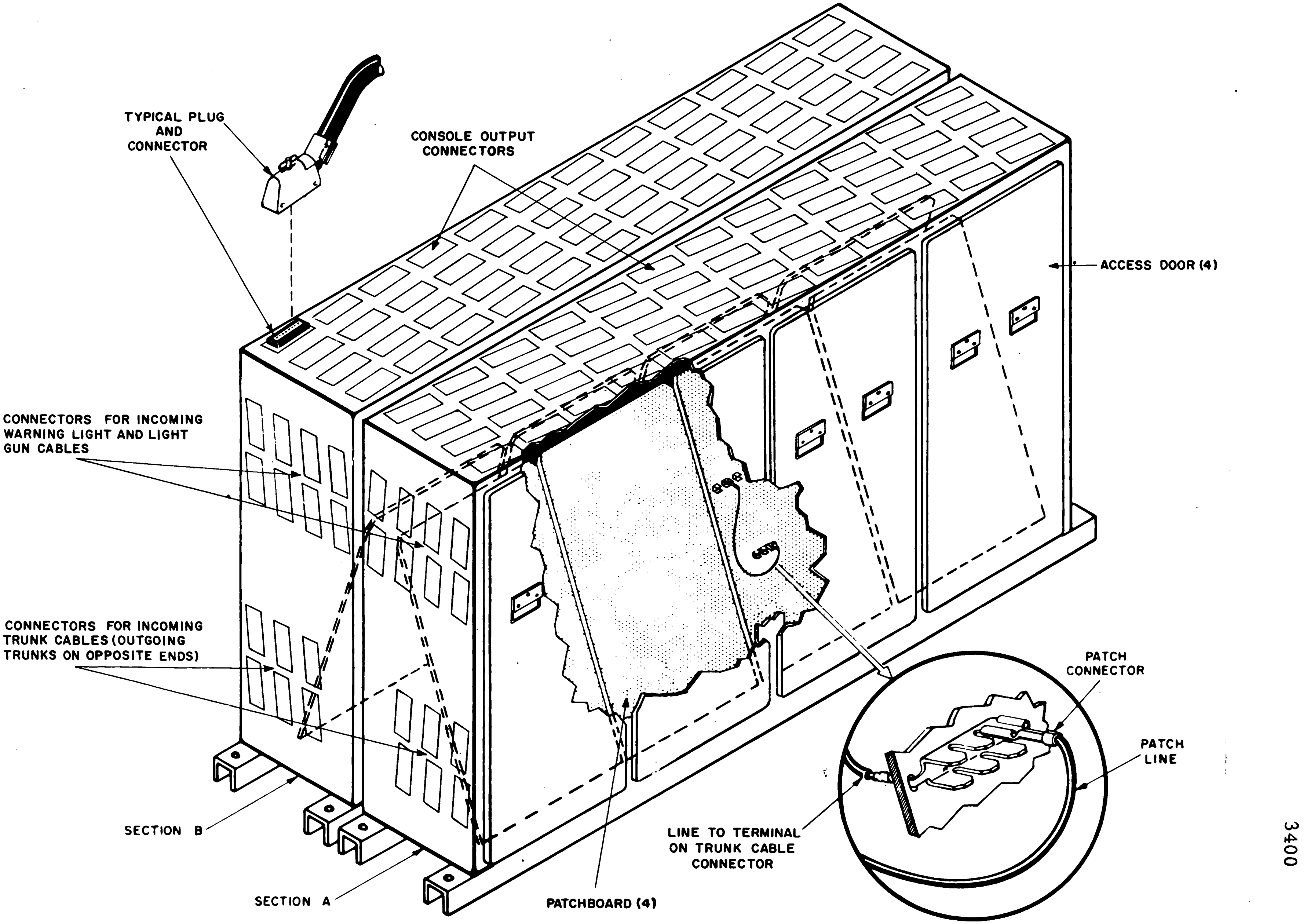

Figure 5—59. Signal Distribution Box, A and B Sections

b. The trunk cable signals are those signals necessary for the presentation of a given display on a particular console. The signals are divided into two general classifications: common and variable. Signals that are applied to all the consoles are referred to as common signals. The variable signals, based on console tactical requirements, are only fed to pre-selected consoles. Table 5-14 lists the common and variable trunk cable signals. The distribution boxes are designed in such a manner as to facilitate signal reassignments and to permit future expansion or revision of the Display System.

<u>Note:</u>
Table 5-14
Page 3420

2. Description

a. There are 18 signal distribution boxes. Each box, 10-1/2 feet long, consists of two separate halves, one for each half of the duplex equipment. The half-boxes are wired identically, the only difference between the two being their physical placement. They are placed back to back (fig. 5-59), and therefore one half is a mirror image of the other half. Each section is electrically independent of the other.

Note
Fig. 5-59
Page 3400

b. The front of each distribution box is provided with four removable doors, which give access to 4 patchboards. These boards, identified as A, B, C, and D, are used to route the incoming trunk cable signals to the console output connectors. Connectors are provided at both ends of the distribution box and on top of the box. The end connectors are used for the inputs and feed-through signals (fig. 5-59); the top connectors are used for the outputs that are fed to the associated consoles.

c. Sufficient output connectors are provided to serve any consoles that may be added to the Display System in the future.

d. The patchboard is a large, rigidly mounted, nylon-base phenolic board containing rows of terminal strips. The terminal strips contain terminals with either 3, 6 or 12 lugs to accommodate patch line connectors.

e. Each of the terminals, with the exception of one group of 3-lug terminals, is provided with a solder lug located at the rear of the terminal. Figure 5-59 contains an illustration of a 3-lug terminal.

TABLE 5 - 14. TRUNK CABLE SIGNALS

COMMON SIGNALS	VARIABLE SIGNALS
DD character selection	Slot lines 0 through 15
DD character position	Slot lines 000 through 700
DD contrast gate	TD CAT's 2 through 31
DD erase gate	MIXED RD CAT's 1 through 12
DD intensify gate	
SD character selection	Supplementary drivers 1 through 45
SD character position	
SD message position	DAB's 1 through 90
A, B, C, D and E features	RD CAT's 1 through 8
Bypass feature	MIX ALL CAT's
Point feature	MIX ALL DAB's
Defocus Gate	Spares
Focus Gate	
SD intensify gate	
Pass light gun	
TD CAT 1	
Vector intensify gate	
Spares	

f. The 3-lug terminals (with the solder lugs) and the 6-lug terminals are used for the incoming trunk cable signals. These terminals, as well as the other group of 3-lug terminals, are also employed as intermediate patching points during patching operations. The 12-lug terminals are used for ground connections.

3. Patching Procedure

   a. The input trunk cable signal lines are soldered to the rear of the 3- or 6-lug terminals. This connection is made to the same terminal on all four patchboards. The assignment of input signal lines to input terminals is predetermined; the assignment is the same for all distribution boxes. Patch lines are used to route the inputs to various intermediate 3- and 6-lug terminals and then to the taper-pin output connectors.

   b. The warning light and light gun output signals bypass the patchboards. These signals are routed between the input and output connectors by taper-pin patch lines within the distribution box.

3. Signal

1. Function

   a. Signal Data Patching Panel SB-602/FSQ is a part of the signal distribution element. It functions as a signal distribution box for a single SD console. The patching panels are used to aid in monitoring the condition of the active Display System and to aid in monitoring the standby Display System. These units provide the means for presenting all messages which appear on any SD CRT or DD CRT on the SD console associated with a patching panel.

2. Description

   a. Four signal data patching panels are employed in the Display System. These panels are mounted directly beside their associated consoles. Signal data patching panel 177A is associated with SD console 167A, 177B with 167B, 178A with 168A, and 178B with 168 B. Cables connect the patching panels to the SD consoles.

   b. The signal data patching panels contain a patchboard (see fig. 5-61) and associated components and wiring to enable selection of any feature. CAT or DAB, supplementary driver, or DD slot line in the Display System for presentation on the associated SD consoles. There are two types of patchboards used in the patching panels: one type is permanently affixed to the front of the patching panel, the other (a later model), illustrated in figure 5-62, is a plug-in unit. Signals selected by

<u>Note:</u> Fig. 5-61
Page 3450

<u>Note:</u> Fig. 5-62
Page 3470

means of these patchboards are fed to the SD console category plugboard. The interior of the patching panel consists of seven component boards containing diodes and resistors.

c. Two groups of signals are applied to the patching panel by the associated DB box. One group enables the operator to select the presentation to be displayed on his console. These signals are first fed to the component boards, and the outputs are then applied to the patchboard. The other group of signals is routed through the patching panel directly to the console, bypassing the patchboard and component boards.

d. Patchboard

1) The patchboard (fig. 5-61) consists entirely of jacks (sometimes called hubs). Some of the jacks are connected to the SD console; the others are connected back to the signal distribution box. Those signals fed to the console are identified in figure 5-61 by solid circles. Each patching panel is provided with a number of patching cords, enabling the operator to select any message or combination of messages for presentation on the associated SD console.

2) The four jacks on the DD SEL OUT row (row 5) are used for selecting any one of the DD messages in the Display System. By selecting the intensity and erase slot line assignments for any particular DD message from rows 2 and 3, and patching them into the DD SEL OUT jacks, the desired message can be displayed on the DD CRT of the associated SD console. The DD MC TEST jack (available only on the plug-in patchboard) is used to facilitate running of the DD marginal check program.

3) The FEATURE OUT row (row 9) contains two groups of four jacks, labeled FSS I and FSS II. Signals patched to these jacks from the FEATURE IN row are fed to the corresponding feature switches of the SD console. At the end of row 9 are two single jacks, labeled PT and BY PASS. These jacks are also connected to the SD console, but they bypass the feature selection switches.

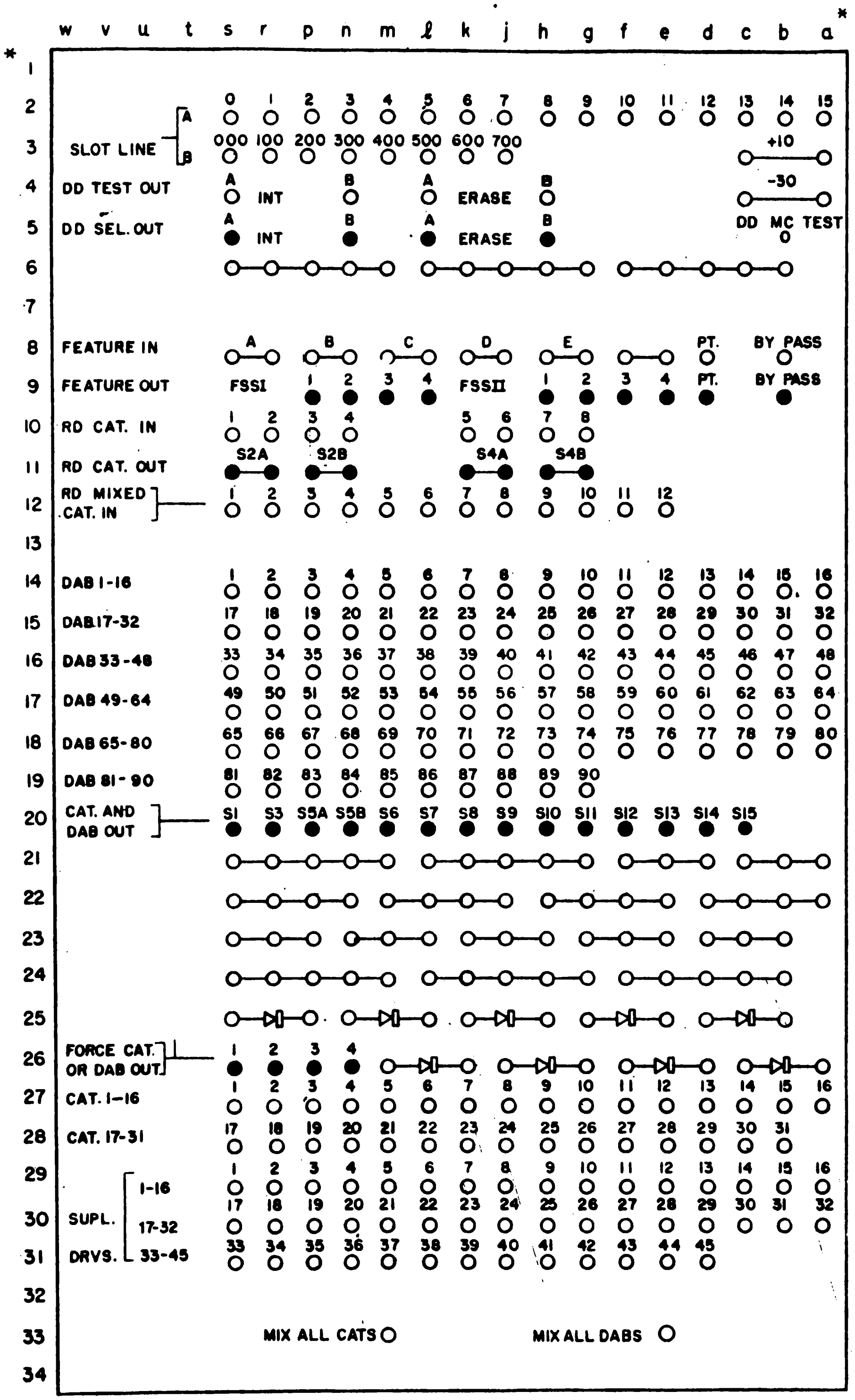

* THE LOCATION NUMBERS AND LETTERS ARE INCLUDED ONLY FOR IDENTIFICATION PURPOSES; THEY DO NOT APPEAR ON THE PLUGBOARD.

Figure 5–61. Signal Data Patching Panel Patchboard

4) The 15 SD console category switches are connected to the jacks of the RD CAT OUT and CAT AND DAB OUT rows (rows 11 and 20, respectively). By patching a category, DAB, or supplementary driver (rows 10, 12, 14 through 19, and 27 through 33) to these jacks, the corresponding category switch on the SD console can select the desired message to be displayed on the SD CRT.

5) The remaining jacks connected to the SD console are located in the FORCE CAT OR DAB OUT row (row 26). These jacks bypass the SD console category switches and are used to produce a forced display on the SD CRT.

6) The rows of unlabeled jacks are not connected to any particular point; these jacks are employed as convenience jacks during patching operations. The lines drawn between adjacent jacks denote that jacks are connected. Several of these jacks have diodes connected between them, and they also are used during patching procedures.

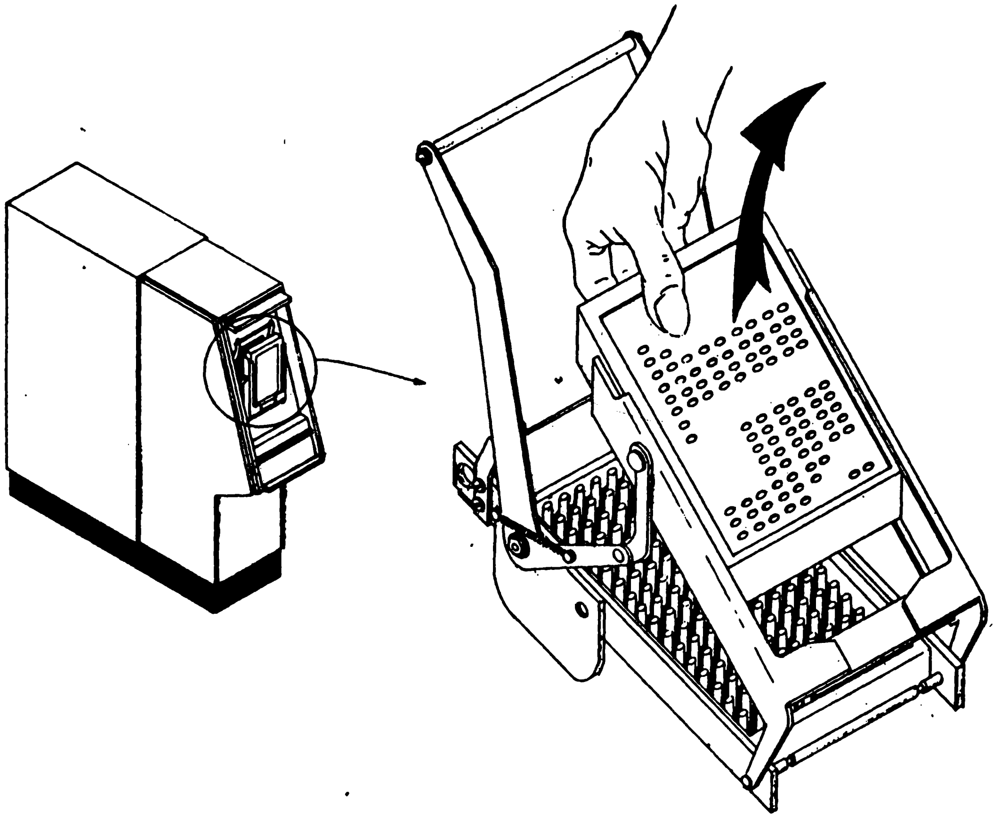

Figure 5—62. Signal Data Patching Panel with Plug-In Patchboard

Procedure for Using Patch Panel

The wiring of the S.D. Console, (#167 & 168), used in conjunction with the Patch Panel, (#177 & #178), has been given increased flexibility. Certain ground rules have to be followed to receive the benefit of the new flexibility. Following is a list of the 15 Catagory switches concerned with the S. D. Console, what type data should be patched to the switch and the deviations necessary to receive maximum benefit from the limited inputs. Mixing of signals may be accomplished on the patching board before plugging to a given switch.

Switch 1-<u>Inputs</u>:

Two separate T.D. Track messages with Feature Selection for FSSI. The switch is arranged to allow separation of the two signal inputs by placing the switch to the left for one and right for the other. Features for both sides of the switch are controlled by the FSSI bank.

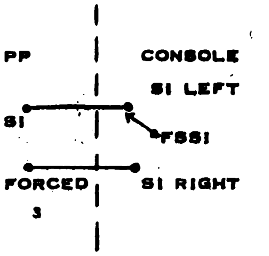

<u>Procedure for Patching:</u>

Patch the signal desired for the left side of the switch to SI. Patch the desired signal for the right side to. Forced Cat or Dab Out 3.

Switch 2-<u>Inputs</u>:

Present R.D. or T.D. track without selectable feature, History R.D. or Information Tracks. The switch affords a separate selection for left/right operation. S2A is patched to <u>dim</u> and may have History R.D. or an Information Track on it. This will appear when the switch is thrown to the right. S2B is patched to <u>bright</u> and may have Present R.D. or a T.D. Track which only has either A or B features in the message. This will appear when the switch is thrown to the left.

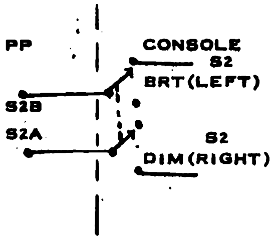

<u>Procedure for Patching:</u>

Patch Present R.D. or T.D. track to S2B (for left operation of switch). Patch History R.D. or Information Track to S2A (for right operation of switch).

Switch 3 - Inputs:

Same as switch 1 except for the FSS II bank of features are used.

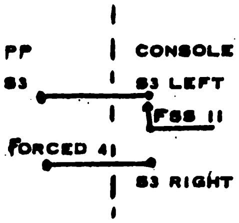

Procedure for Patching:

Patch desired signal for the left side of the switch to S3. Patch the desired signal for the right side of the switch to Forced Cat or Dab Out 4.

Switch 4 - Inputs:

Same as Switch 2.

Procedure for Patching:

Patch Present R.D. or T.D. Track to S4B (for left operation of the switch). Patch History R.D. or Information Track to S4A (for right operation of the switch)

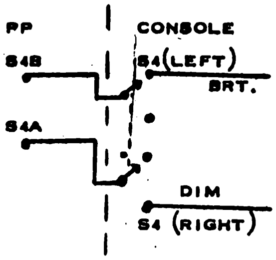

Switch 5 - Inputs:

History R.D. or Information Tracks, T.D, Track with FSSI features. This switch will allow R. D. History to be shown on one side of the switch (left) with the present T.D. Track associated with it on the right side. An Information Track may be used instead of the R.D. History, if desired.

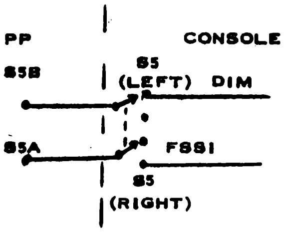

Procedure for Patching:

Patch desired R.D. History or Information Track to S5B (for left operation of switch). Patch T.D. Track signal to S5A (for right operation of switch)

Switch 6 - Inputs:

T.D. Tracks with both A and B features. Throwing the switch to the left will give FSSI features. Throwing the switch to the right will give FSSII Features.

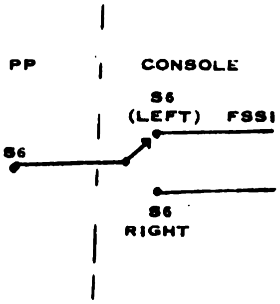

Procedure for Patching:

Patch any feature selectable T.D. Track to S6.

Switch 7 - Inputs:

Same as switch 6.

Procedure for Patching:

Patch any feature selectable T. D. Track to S7.

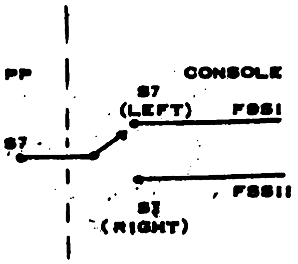

Switch 8 - Inputs:

Same as switch 6.

Procedure for Patching:

Patch any feature selectable T.D. Track to S8.

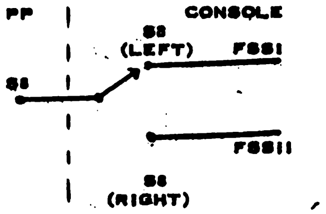

Switch 9 - Inputs:

Same as switch 6.

Procedure for Patching

Patch any feature selectable T.D. Track to S9.

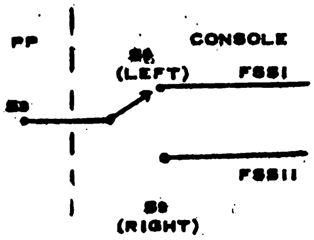

Switch 10 - Inputs:

Same as switch 6.

Procedure for Patching:

Patch any feature selectable T.D. Track to S10.

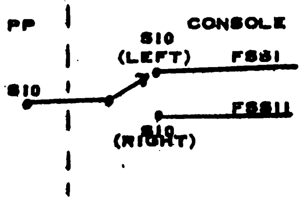

Switch 11 - Inputs:

Same as switch 6.

Procedure for Patching:

Patch any feature selectable T.D. Track to S11.

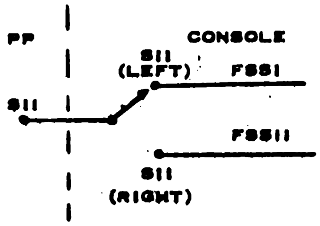

Switch 12 - Inputs:

T.D. Track without selectable features or Present R.D. Only T., D., Tracks with either A or B features can be patched. T., D., Tracks may be acted on with a Light Gun.

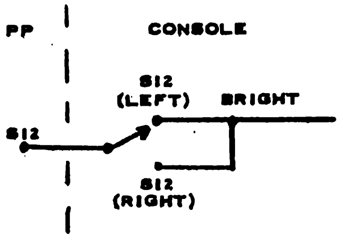

Procedure for Patching:

Patch any Present R.D. or non feature selectable T.D. Track to S12.

Switch 13 - Inputs:

T.D. Information Track or History R.D. There is no feature selection for the T.D. Information Track.

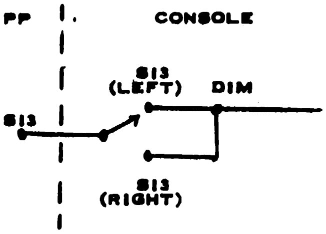

Procedure for Patching:

Patch any T.D. Information Track or History R.D. to S13.

Switch 14 - Inputs:

Same as switch 13.

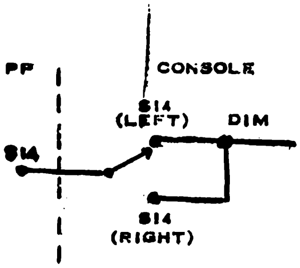

Procedure for Patching:

Patch any T.D. Information Track or History R.D. to S14.

Switch 15 - Inputs:

Three T.D. Vector Messages which are expansion dependent. This switch is wired to allow different signals on each of the three expansion scale. The primary use is for Georef but other Information messages may be used if desired.

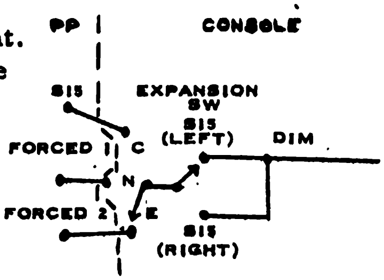

Procedure for Patching:

Patch the desired signal for the Contracted position to S15 Patch the desired signal for the Normal position of expansion to Forced Cat or Dab Out 1. Patch the desired signal for the Expand position of the expansion scale to Forced Cat or Dab Out 2.

Jumpers used on patch board

P/N	Type
3208030	5 headed
3208032	4 headed
3208031	3 headed
3095365	2 headed
3095366	2 headed (long)
3095364	Bottle Plug

DD PATCHING

Facilities are provided on the "See-All" patching panels (consoles 167-168), for selecting any available DD Slot for the Digital Display associated with it. There are also facilities or selecting a Slot to be used for test, which when patched works in conjunction with the DD TEST switch on the console sub-panel.

A DD Slot assignment is derived by wiring a combination of "slots" and "blocks". There are 7 "blocks" (000 thru 700) and 16 "slots" (0 thru 15) in each of these "blocks" (see Figure 2). An example of how these combinations allow intensity and erase of a DD CRT is shown below:

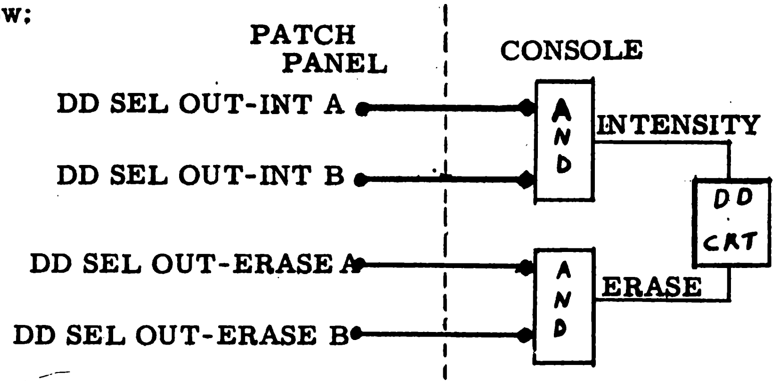

FIGURE 3

Slot lines are usually specified in decimal figures. These must be reduced to simple SLOT-BLOCK configurations for patching purpose. This can be done by applying these formulas.

DECIMAL SLOT LINE TO SLOT-BLOCK

$\text{SLOT-BLOCK} = \frac{\text{SLOT LINE}}{16}_{10}$ The quotient becomes the "BLOCK" and the remainder becomes the "SLOT".

EXAMPLE: To find SLOT-BLOCK equivalent of Slot Line 63_{10}.

$$\text{SLOT-BLOCK} = \frac{63_{10}}{16} = 3 / 15 \text{ (remainder)}$$

$$\text{SLOT-BLOCK} = \underline{300} / 15$$

If the SLOT-BLOCK configuration is known and the decimal equivalent is desired, the following formula applies:

SLOT-BLOCK TO DECIMAL SLOT LINE

DECIMAL SLOT LINE = (BLOCK X 16) / SLOT

EXAMPLE: To find the DECIMAL SLOT LINE equivalent of 400 and 03.

$$\text{DECIMAL SLOT LINE} = (4 \times 16) + 3 = 64_{10} + 3$$
$$\text{or SLOT LINE } 67_{10}$$

Two Slot Lines must be assigned to each DD CRT for proper operation. One is for erasing the DD and the second is for displaying on the DD, or intensification.

The Slot Line for erase is usually specified with the one for intensification. For instances where it is not specified, it is suggested that the DD be erased approximately 13 slots prior to intensification.

If the intensity Slot number is less than 11 for Combat Centrals and 14 for Direction Centrals, the erase selection should be 000 and 0 on the patch panel. This allows erasure during the "initial erase period".

The highest usable Slot Line at present for Direction Centrals is 600-09 or Slot Line 105_{10} and for Combat Centrals it is 400-0 or Slot Line 64_{10}.

The procedure for patching is as follows:

When the Slot Line for intensity is known in decimal, apply formula 1 to determine the SLOT-BLOCK configuration.

1. Insert a plugcord into the correct BLOCK on the "B" row of the hubs labelled SLOT LINE. Plug the other end into the DD SEL OUT-INT B hub.

2. Insert a plugcord into the correct SLOT on the "A" row of the hubs labelled SLOT LINE. Plug the other end into the DD SEL OUT-INT A hub.

When the slot line for erase is known in decimal, apply formula 1 to determine the SLOT-BLOCK configuration.

3. Insert a plugcord into the correct SLOT on the "A" row of the hubs labelled SLOT LINE. Plug the other end into the DD SEL OUT-ERASE A hub.

4. Insert a plugcord into the correct BLOCK on the B row of the hubs labelled SLOT LINE. Plug the other end into the DD SEL OUT-ERASE B hub.

If a hub in the SLOT LINE A or B row is already being utilized, use the following procedure:

5. Remove the plugcord from the hub and insert it into one of the groups of connected, unlabelled hubs directly below the DD SEL OUT row.

6. Insert one end of a plugcord to an unmarked hub in the same group selected in step 5.

7. Insert the other end into the same hub where the plug was removed in step 5. The unmarked group of hubs used now become the same as the SLOT or BLOCK to which they are plugged. As many groups as needed may be used.

TEST SLOT LINE

The procedure for patching in the Test Slot is the same as a normal slot except the DD TEST OUT row is used in place of the DD SEL OUT row in steps 1 thru 4. This slot line is then connected to the DD by turning the DD test switch, on the console sub-panel to 'TEST 1'.

The Test Slot assignment for a Direction Central is 105 and for a Combat Central 55.

DD MARGINAL CHECK TEST

The DD MC TEST hub allows the simultaneous display of several predetermined slots for the purpose of obtaining a visual indication when Marginal Checking circuitry in the Digital Display Generator Element. The appropriate DDGE MC program must be used to utilize this hub.

The procedure for patching is as follows:

8. Connect a plugcord from the DD MC TEST hub to the DD SEL OUT INTA hub.

9. Connect a plugcord from the +10 hub to the DD SEL OUT - INT B hub.

10. Connect a plugcord from hub 0 of SLOT LINE, ROW A to the DD SEL OUT - ERASE A hub.

11. Connect a plugcord from hub 000 of SLOT LINE, ROW B to the DD SEL OUT- ERASE B hub.

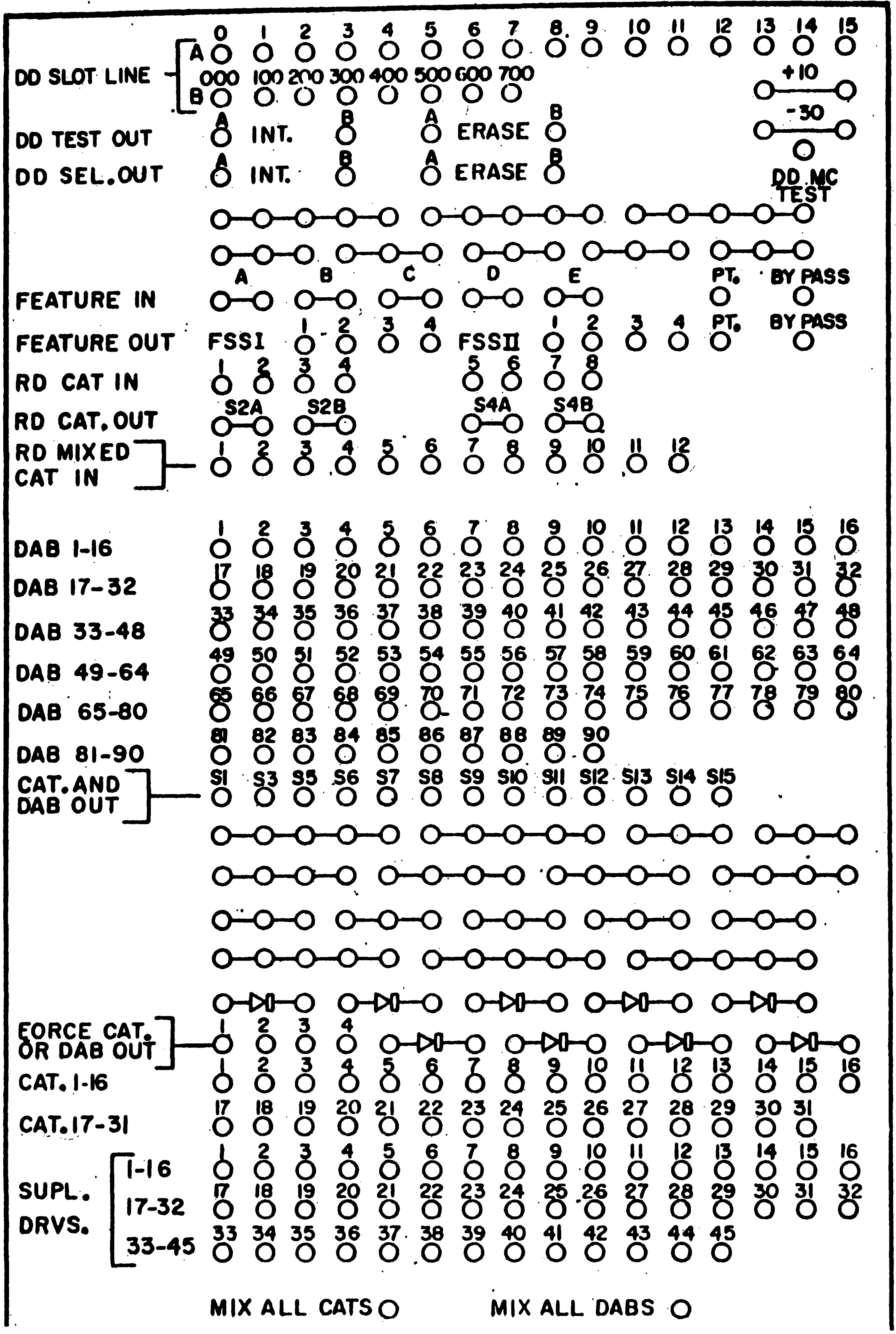
DD SLOT LINE
A 0 1 2 3 4 5 6 7 8 9 10 11 12 13 14 15
000 100 200 300 400 500 600 700
B
+10
-30
DD TEST OUT
A INT. B A ERASE B
DD SEL.OUT
A INT. B A ERASE B
DD MC TEST
FEATURE IN
A B C D E PT. BY PASS
FEATURE OUT
FSSI 1 2 3 4 FSSII 1 2 3 4 PT. BY PASS
RD CAT IN
1 2 3 4 5 6 7 8
RD CAT. OUT
S2A S2B S4A S4B
RD MIXED CAT IN
1 2 3 4 5 6 7 8 9 10 11 12
DAB 1-16
DAB 17-32
DAB 33-48
DAB 49-64
DAB 65-80
DAB 81-90
CAT. AND DAB OUT
S1 S3 S5 S6 S7 S8 S9 S10 S11 S12 S13 S14 S15
FORCE CAT. OR DAB OUT
1 2 3 4
CAT. 1-16
CAT. 17-31
SUPL. DRVS.
1-16
17-32
33-45
MIX ALL CATS
MIX ALL DABS

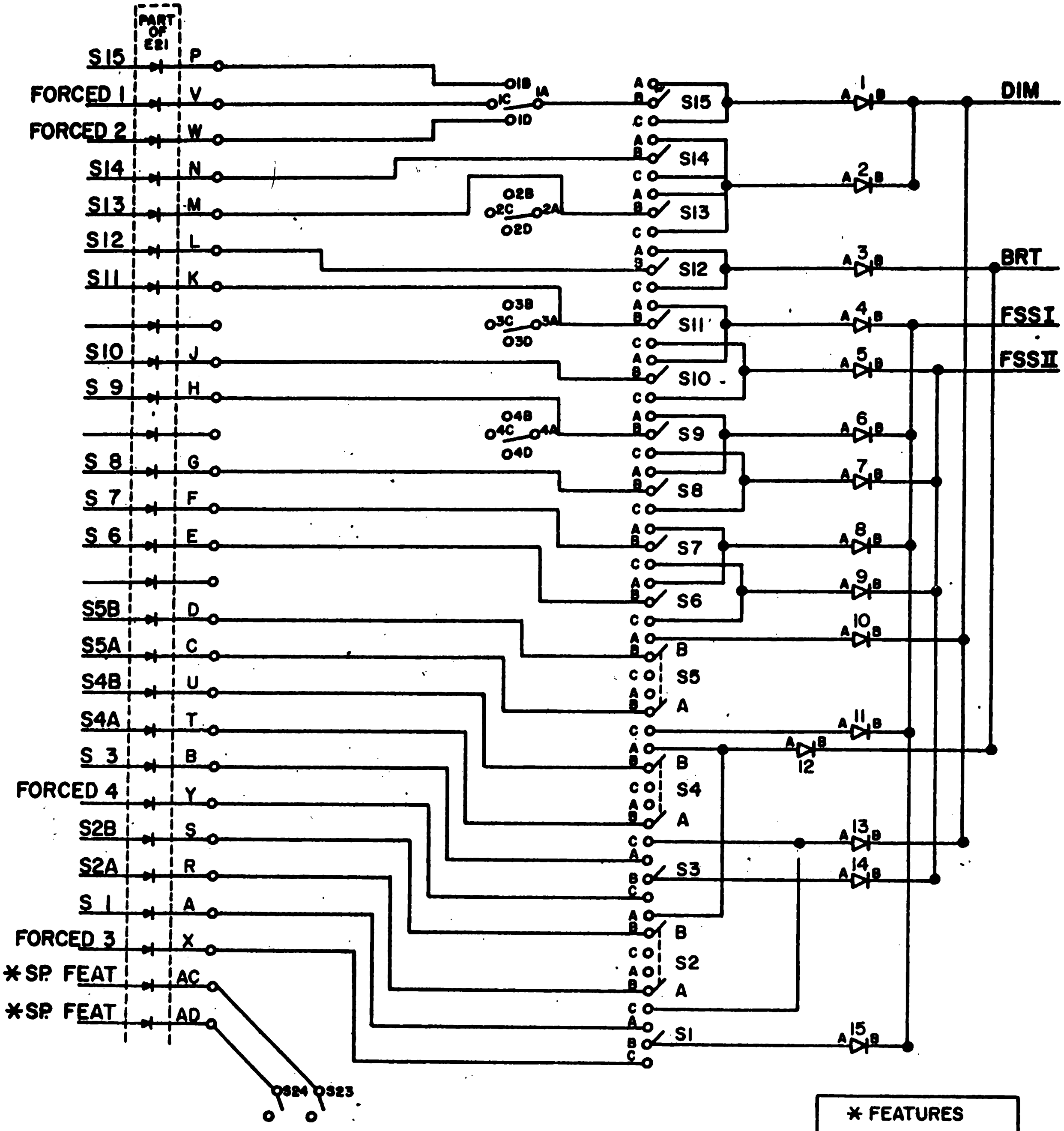

UNITS-A & B, 167 & 168
CAT/DAB PLUG BOARD WIRING DIAGRAM

*** FEATURES**

IN	FEAT. SW.
A	16
B	17
C	18
D	19
E	21
SPARE	22

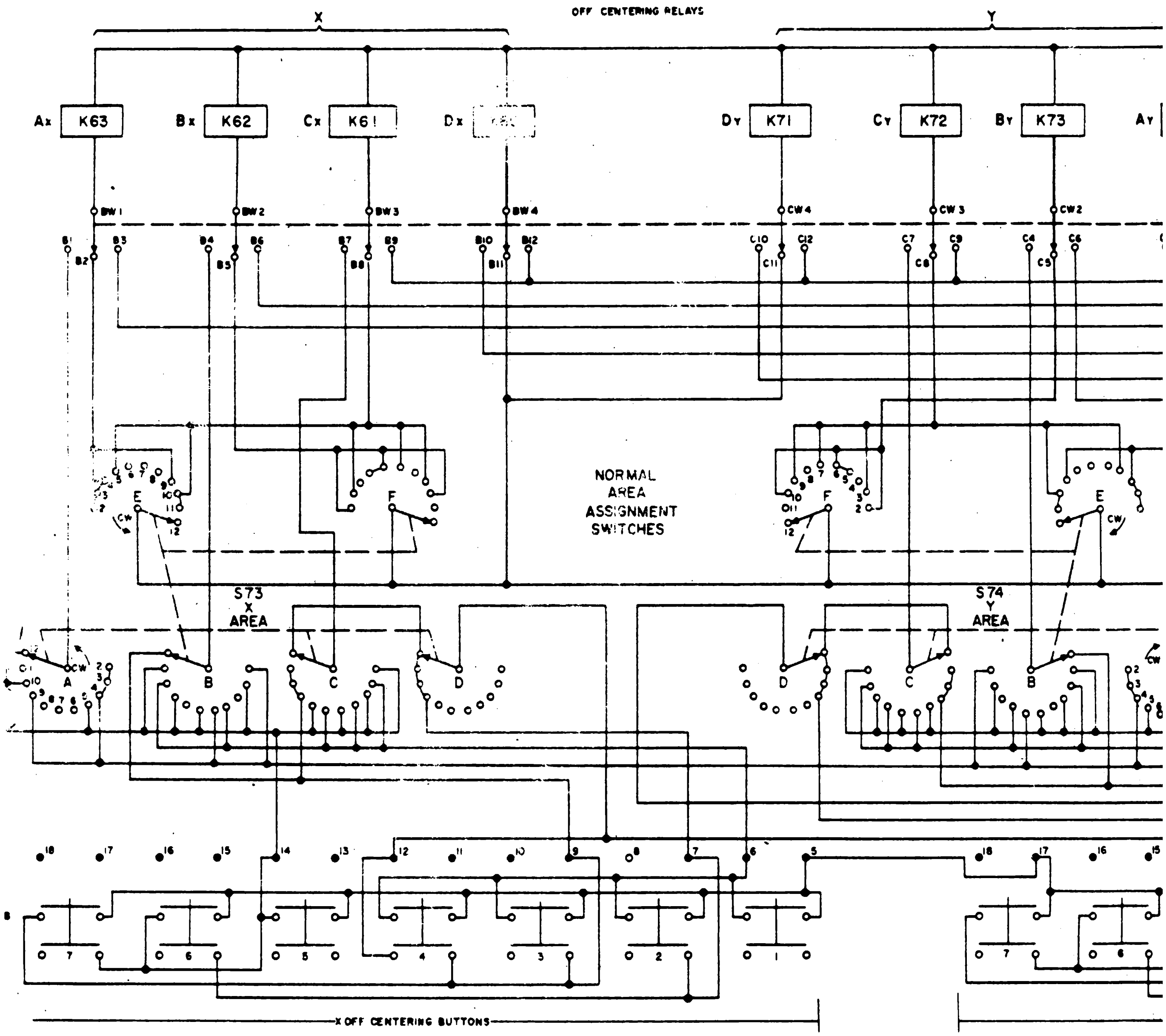
OFF CENTERING RELAYS
X
Y
Ax
K63
Bx
K62
Cx
K61
Dx
K60
Dy
K71
Cy
K72
By
K73
Ay
BW1
BW2
BW3
BW4
CW4
CW3
CW2
B1
B2
B3
B4
B5
B6
B7
B8
B9
B10
B11
B12
C10
C11
C12
C7
C8
C9
C4
C5
C6
NORMAL
AREA
ASSIGNMENT
SWITCHES
E
F
CW
S73
X
AREA
S74
Y
AREA
A
B
C
D
18
17
16
15
14
13
12
11
10
9
8
7
6
5
X OFF CENTERING BUTTONS

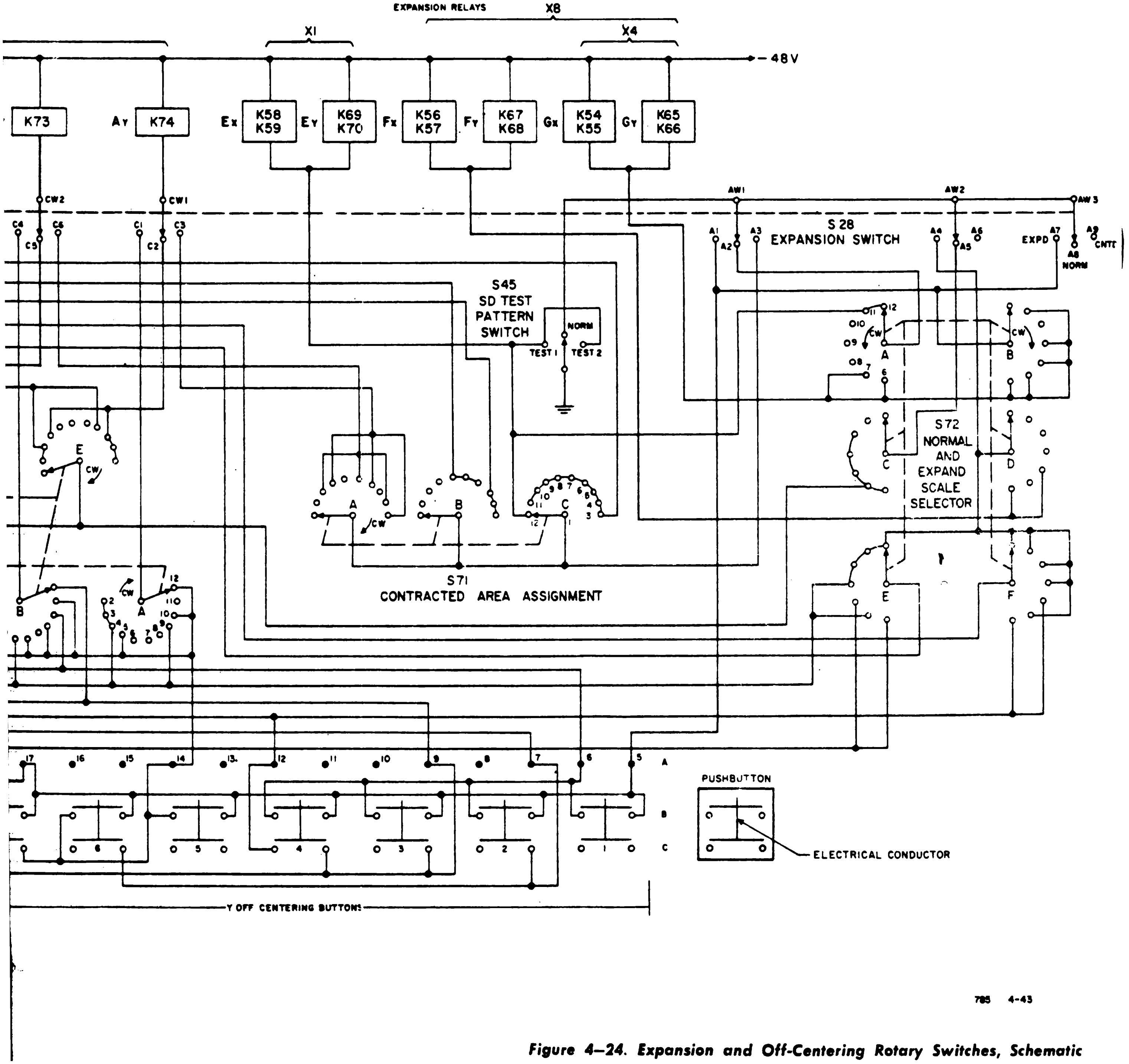

Figure 4–24. Expansion and Off-Centering Rotary Switches, Schematic

3590

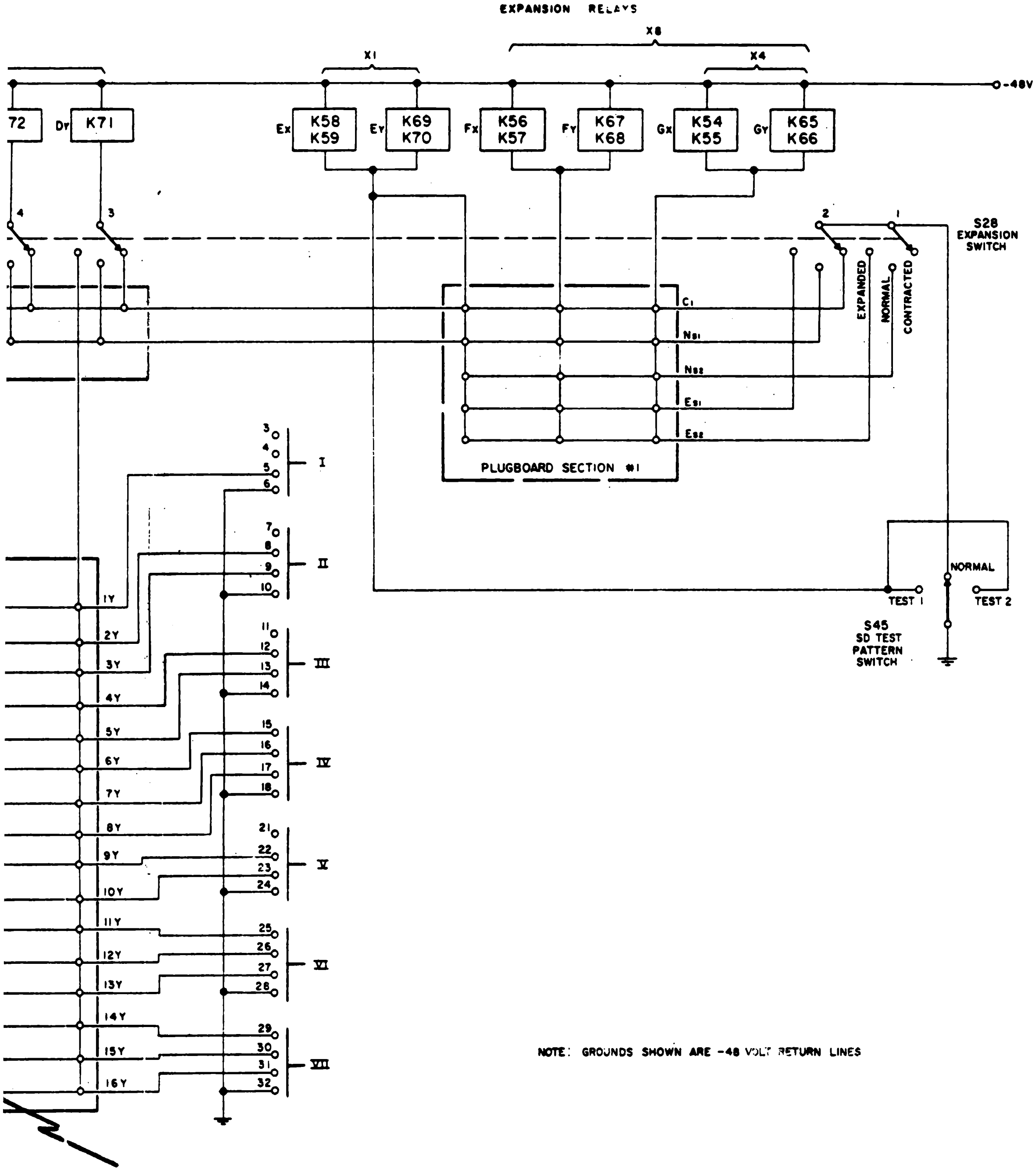

Horizontal and Vertical lines connected by means of plugs.

Figure 4—27. Expansion and Off-Centering Plugboards, Schematic

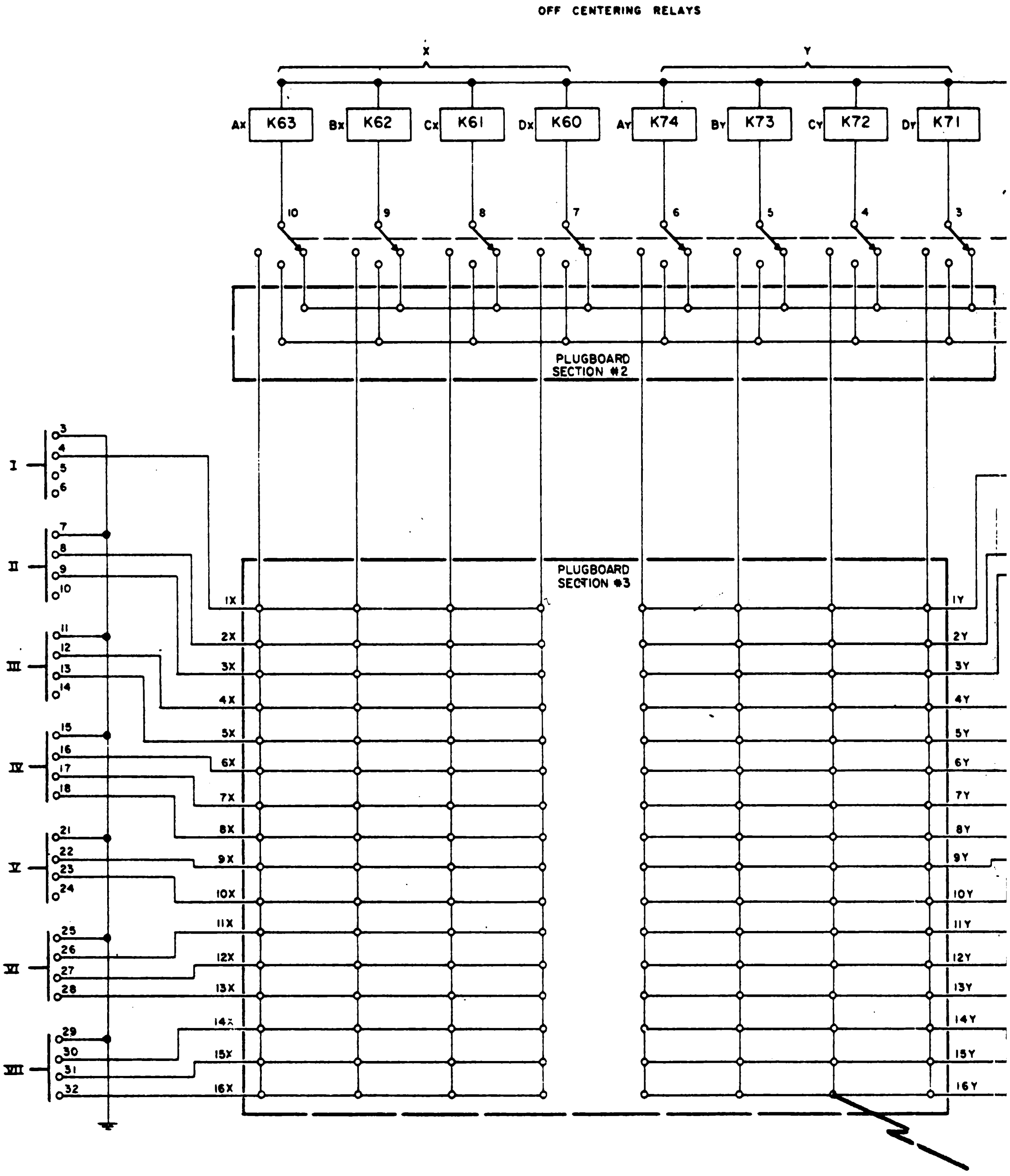
OFF CENTERING RELAYS
X
Y
Ax K63
Bx K62
Cx K61
Dx K60
Ay K74
By K73
Cy K72
Dy K71
10
9
8
7
6
5
4
3
PLUGBOARD SECTION #2
PLUGBOARD SECTION #3
I
II
III
IV
V
VI
VII
3
4
5
6
7
8
9
10
11
12
13
14
15
16
17
18
21
22
23
24
25
26
27
28
29
30
31
32
1X
2X
3X
4X
5X
6X
7X
8X
9X
10X
11X
12X
13X
14X
15X
16X
1Y
2Y
3Y
4Y
5Y
6Y
7Y
8Y
9Y
10Y
11Y
12Y
13Y
14Y
15Y
16Y

Horizo

DMC

UNIT 25

console

3610

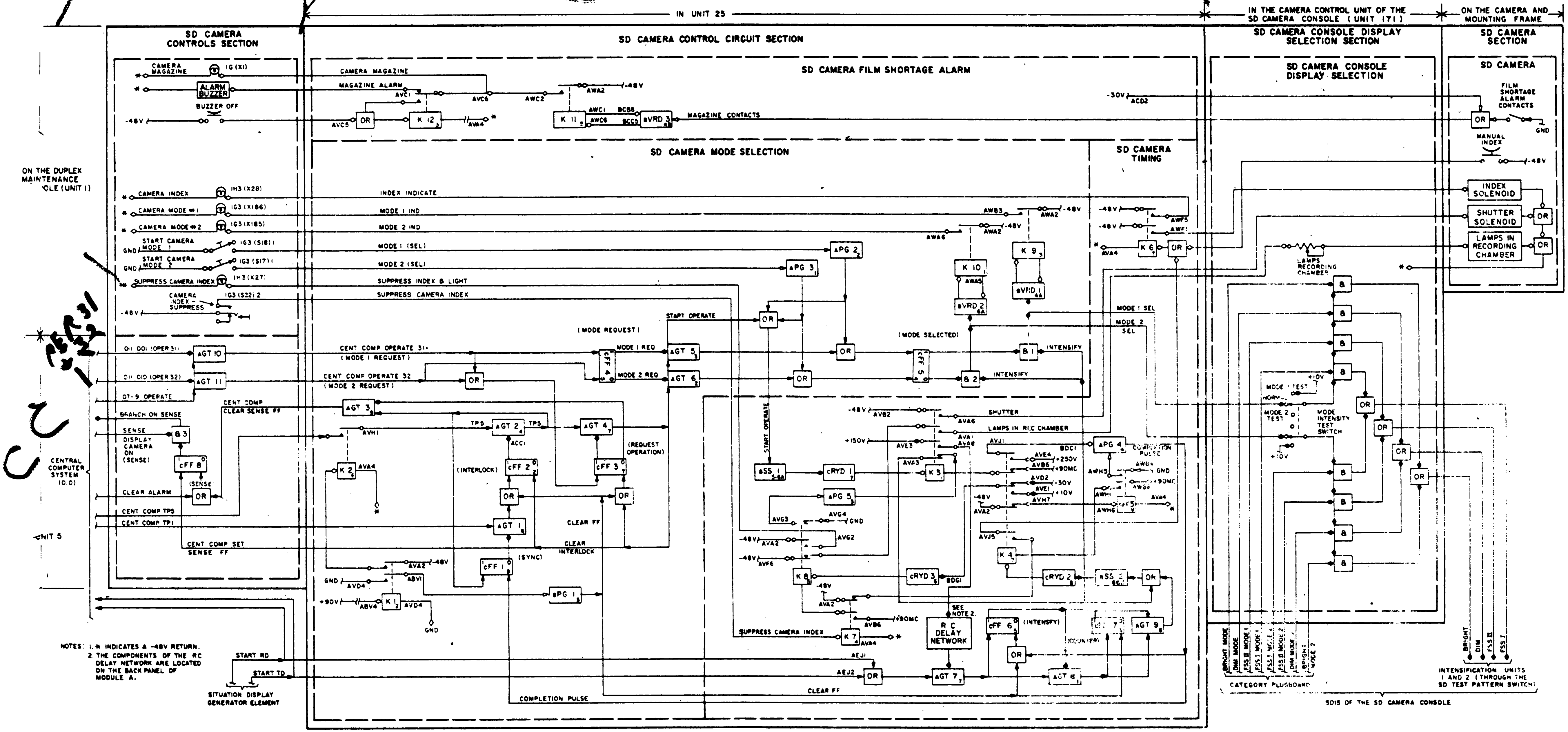

NOTES: 1. * INDICATES A -48V RETURN.
2. THE COMPONENTS OF THE RC DELAY NETWORK ARE LOCATED ON THE BACK PANEL OF MODULE A.

Figure 5–51. Situation Display Camera Element, Logical Diagram

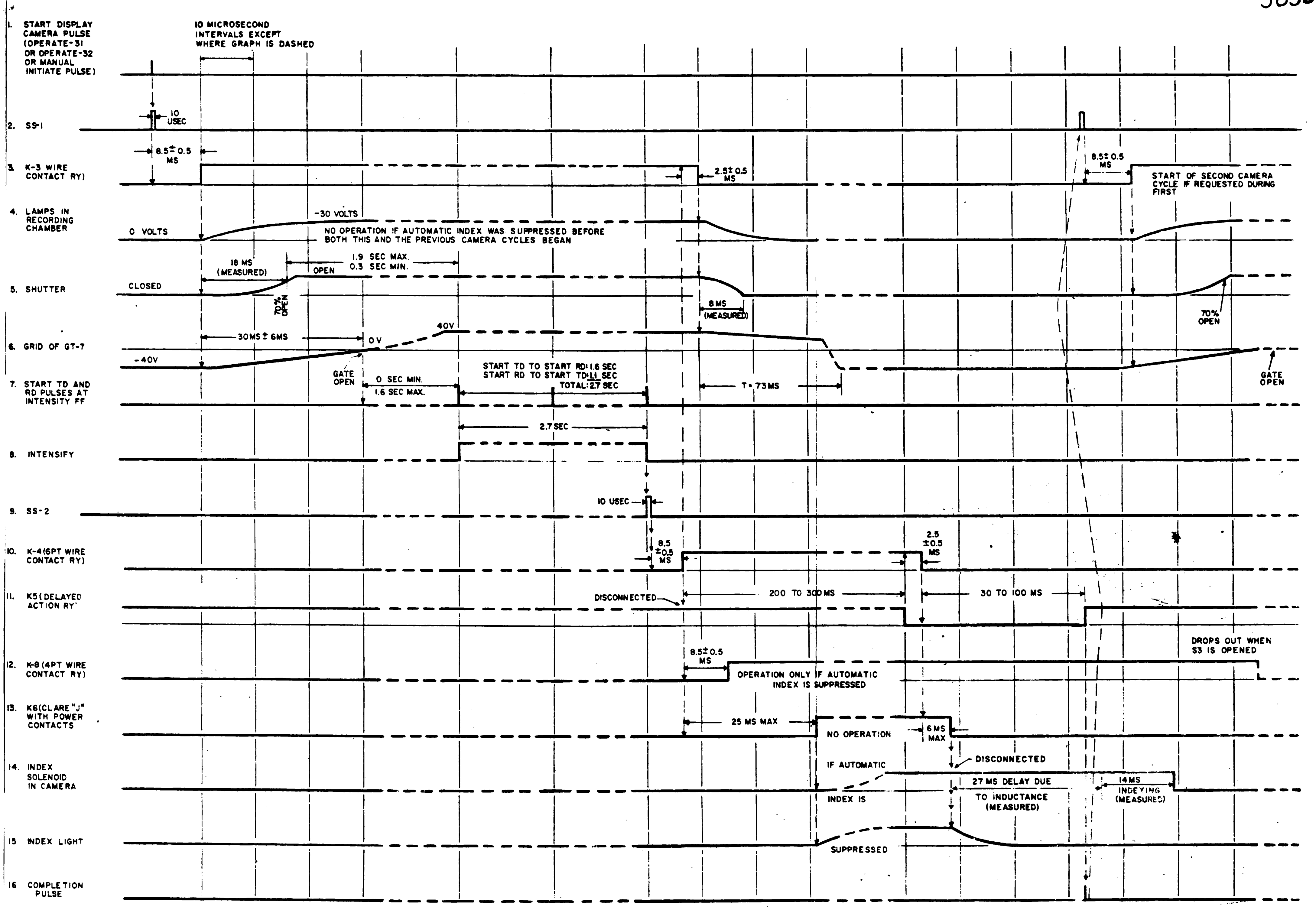

Figure 5–52. Situation Display Camera Control, Timing Diagram