PowerPC 60x/7xx SMP REFERENCE BOARD SCHEMATICS

THIS DOCUMENT CONTAINS PRELIMINARY INFORMATION AND IS SUBJECT TO CHANGE BY IBM WITHOUT NOTICE. IBM ASSUMES NO RESPONSIBILITY OF LIABIALITY FOR ANY USE OF THE INFORMATION CONTAINED HEREIN. NOTHING IN THIS DOCUMENT SHALL OPERATE AS AN EXPRESS OR IMPLIED LICENSE OR INDEMNITY UNDER THE INTELLECTUAL PROPERTY RIGHTS OF IBM OR THIRD PARTIES. NO WARRANTY OR GUARANTEE IS GIVEN CONCERNING ANY INFORMATION CONTAINED IN THIS DOCUMENT. TO ENSURE THAT YOU HAVE THE LATEST VERSION OF THIS DOCUMENT, PLEASE CONTACT YOUR MARKETING REPRESENTATIVE OR IBM MICROELECTRONICS TACTICAL MARKETING 1-800-IBM-0181

© COPYRIGHT IBM CORPORATION 1995
ALL RIGHTS RESERVED

IBM			
DRAWING DATE: 15 DEC 1995	SIZE B	REVISION	DRWNG PART NUMBER MPRZP1SCU-03
POWERPC 604 SMP REFERENCE DESIGN			SHEET 1 OF 64

MOTHERBOARD

```
*************************************************************
******                    CONTENTS                     ******
*************************************************************
```


1) FRONT PAGE 1
2) CONTENT.....2
3) BLOCK DIAGRAM.....3
4) CHANGE HISTORY.....4
5) SCHEMATICS.....5-64

- AUDIO 38-45
- CLOCKS 20-21
- DRAM SIMMS 14-17
- ETHERNET CONTROLLER 30
- EPLD (SYSTEM) 46
- L2 CONNECTOR 18-19
- MOUSE/KEYBOARD CONTROLLER.....50
- MULTI-PROC INTERRUPT CONTROLLER.....22-23
- NVRAM/RTC 50
- PCI TO ISA BRIDGE CONTROLLER 31-33
- PCI/ISA EXPANSION RISER 24-26
- POWERPC TO PCI BRIDGE CONTROLLERS.....10-13
- PROCESSOR UPGRADE CONNECTORS (P1 & P2) 7-10
- RESET LOGIC 52-53
- ROM 27
- SCSI CONTROLLER 28-29
- SUPER IO CONTROLLER 35-37
  - % FLOPPY DISK 35
  - % PARALLEL PORT 35
  - % SERIAL 1/2 PORT.....37

* SIGNAL CROSS REFERENCES 55-58

* COMPONENT CROSS REFERENCES 58-64

IBM	CONTENTS		
DATE: 15 DEC 1995	SIZE B	REVISION	DRWNG PART NUMBER MPRZP1SCU-03
POWERPC 604 SMP REFERENCE DESIGN			SHEET 2 OF 64

MOTHERBOARD

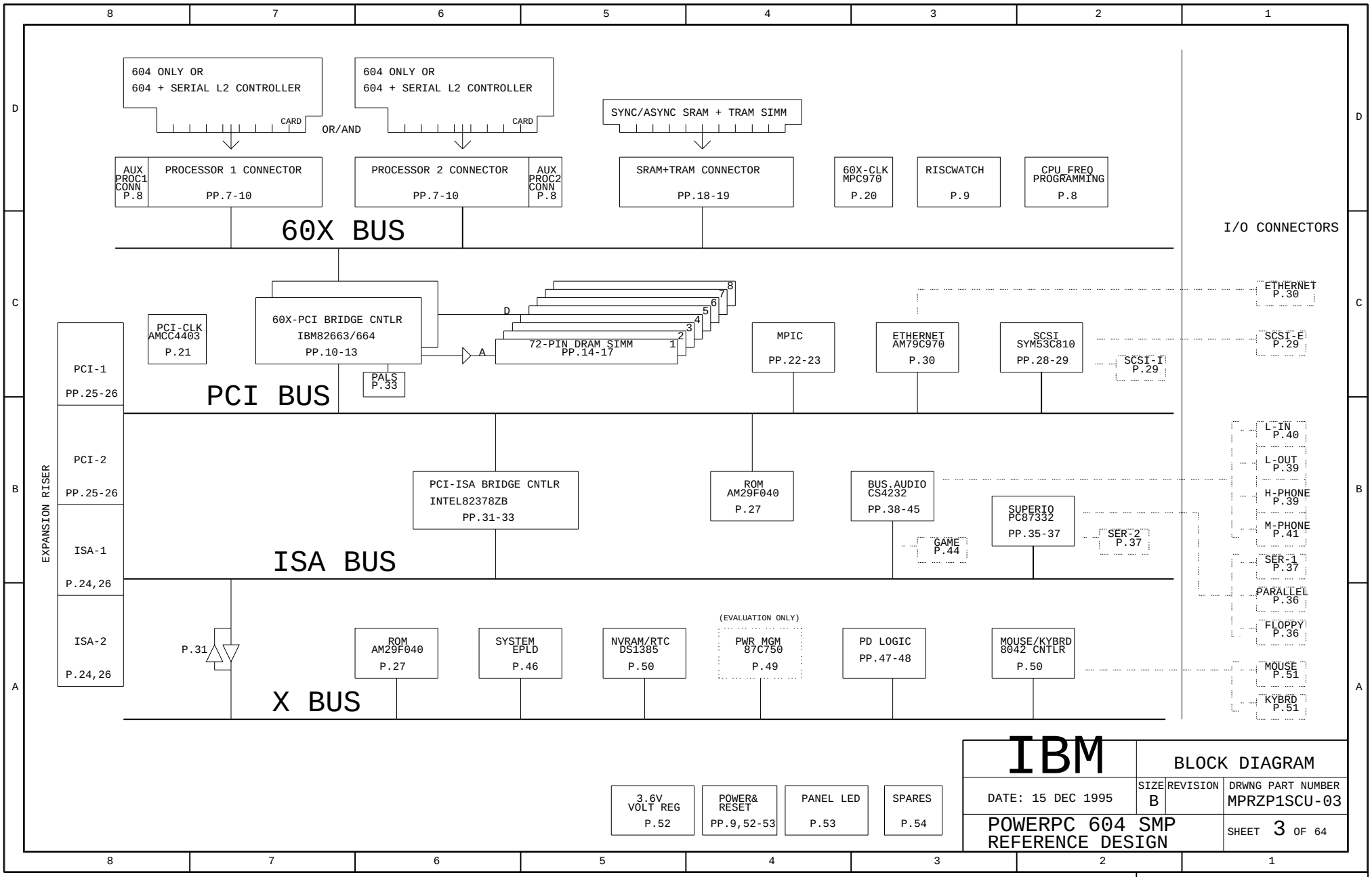
604 ONLY OR
604 + SERIAL L2 CONTROLLER
CARD
OR/AND
604 ONLY OR
604 + SERIAL L2 CONTROLLER
CARD
SYNC/ASYNC SRAM + TRAM SIMM
AUX PROC1 CONN P.8
PROCESSOR 1 CONNECTOR
PP.7-10
PROCESSOR 2 CONNECTOR
PP.7-10
AUX PROC2 CONN P.8
SRAM+TRAM CONNECTOR
PP.18-19
60X-CLK MPC970
P.20
RISCWATCH
P.9
CPU FREQ PROGRAMMING
P.8
60X BUS
I/O CONNECTORS
PCI-CLK AMCC4403
P.21
60X-PCI BRIDGE CNTLR
IBM82663/664
PP.10-13
PALS
P.33
72-PIN DRAM SIMM
PP.14-17
MPIC
PP.22-23
ETHERNET AM79C970
P.30
SCSI SYM53C810
PP.28-29
SCSI-I
P.29
ETHERNET
P.30
SCSI-E
P.29
PCI BUS
EXPANSION RISER
PCI-1
PP.25-26
PCI-2
PP.25-26
ISA-1
P.24,26
ISA-2
P.24,26
PCI-ISA BRIDGE CNTLR
INTEL82378ZB
PP.31-33
ROM
AM29F040
P.27
BUS.AUDIO
CS4232
PP.38-45
GAME
P.44
SUPERIO
PC87332
PP.35-37
SER-2
P.37
L-IN
P.40
L-OUT
P.39
H-PHONE
P.39
M-PHONE
P.41
SER-1
P.37
PARALLEL
P.36
FLOPPY
P.36
ISA BUS
P.31
ROM
AM29F040
P.27
SYSTEM
EPLD
P.46
NVRAM/RTC
DS1385
P.50
(EVALUATION ONLY)
PWR MGM
87C750
P.49
PD LOGIC
PP.47-48
MOUSE/KYBRD
8042 CNTLR
P.50
MOUSE
P.51
KYBRD
P.51
X BUS
3.6V
VOLT REG
P.52
POWER&
RESET
PP.9,52-53
PANEL LED
P.53
SPARES
P.54
IBM
BLOCK DIAGRAM
DATE: 15 DEC 1995
SIZE
B
REVISION
DRWNG PART NUMBER
MPRZP1SCU-03
POWERPC 604 SMP
REFERENCE DESIGN
SHEET 3 OF 64
MOTHERBOARD

THIS PAGE IS INTENTIONALLY LEFT BLANK

IBM			
DATE: 15 DEC 1995	SIZE B	REVISION	DRWNG PART NUMBER MPRZP1SCU-03
POWERPC 604 SMP REFERENCE DESIGN			SHEET 4 OF 64

MOTHERBOARD

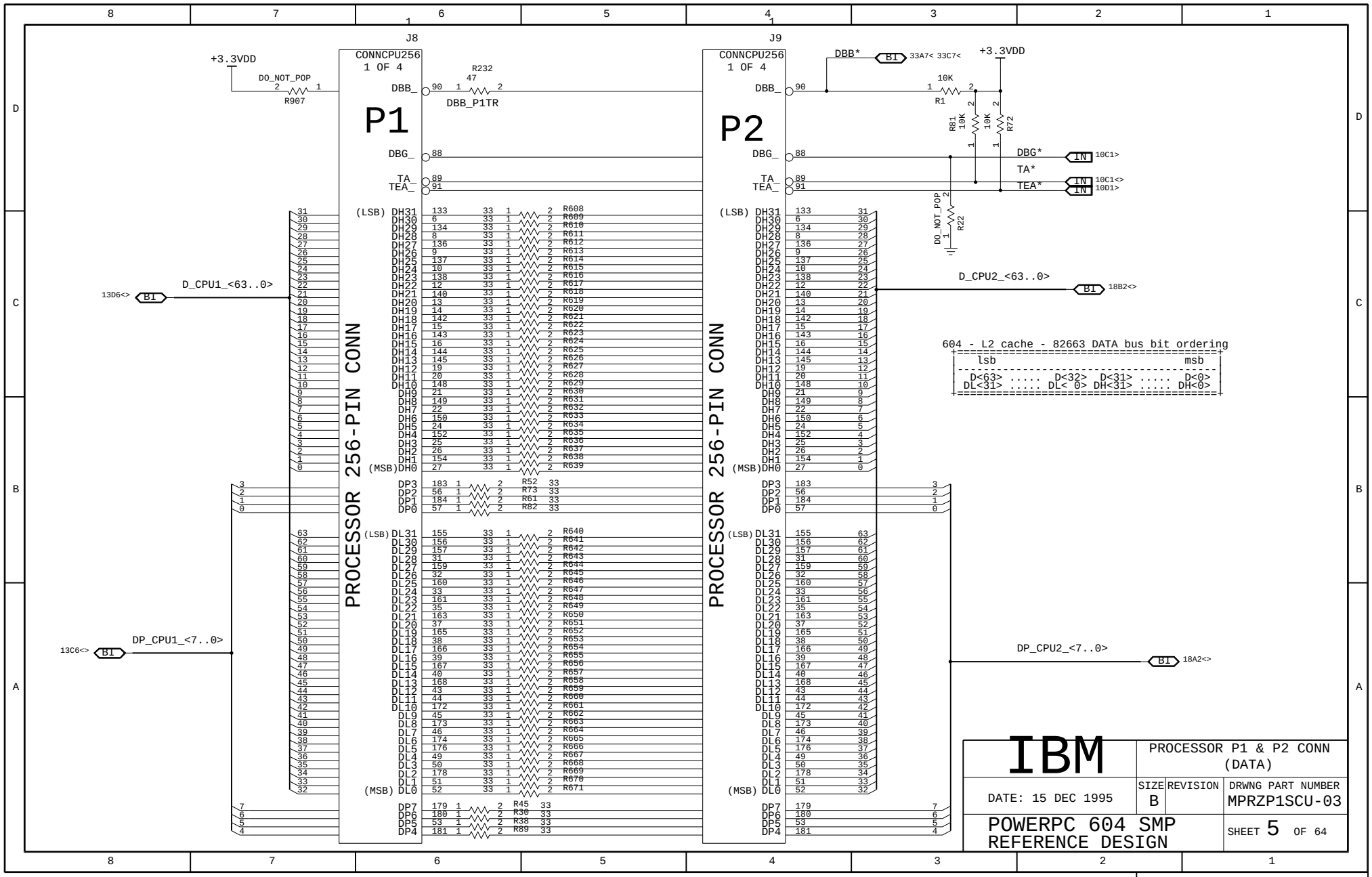
J8
CONNCPU256
1 OF 4
P1
PROCESSOR 256-PIN CONN
J9
CONNCPU256
1 OF 4
P2
PROCESSOR 256-PIN CONN
+3.3VDD
DO_NOT_POP
R907
R232
47
DBB_P1TR
DBB*
33A7< 33C7<
10K
R1
R81
R72
DBG*
TA*
TEA*
10C1>
10C1<>
10D1>
R22
D_CPU1_<63..0>
13D6<>
D_CPU2_<63..0>
18B2<>
DP_CPU1_<7..0>
13C6<>
DP_CPU2_<7..0>
18A2<>
604 - L2 cache - 82663 DATA bus bit ordering
lsb
msb
D<63> ..... D<32> D<31> ..... D<0>
DL<31> ..... DL< 0> DH<31> ..... DH<0>
IBM
PROCESSOR P1 & P2 CONN
(DATA)
DATE: 15 DEC 1995
SIZE
B
REVISION
DRWNG PART NUMBER
MPRZP1SCU-03
POWERPC 604 SMP
REFERENCE DESIGN
SHEET 5 OF 64
MOTHERBOARD

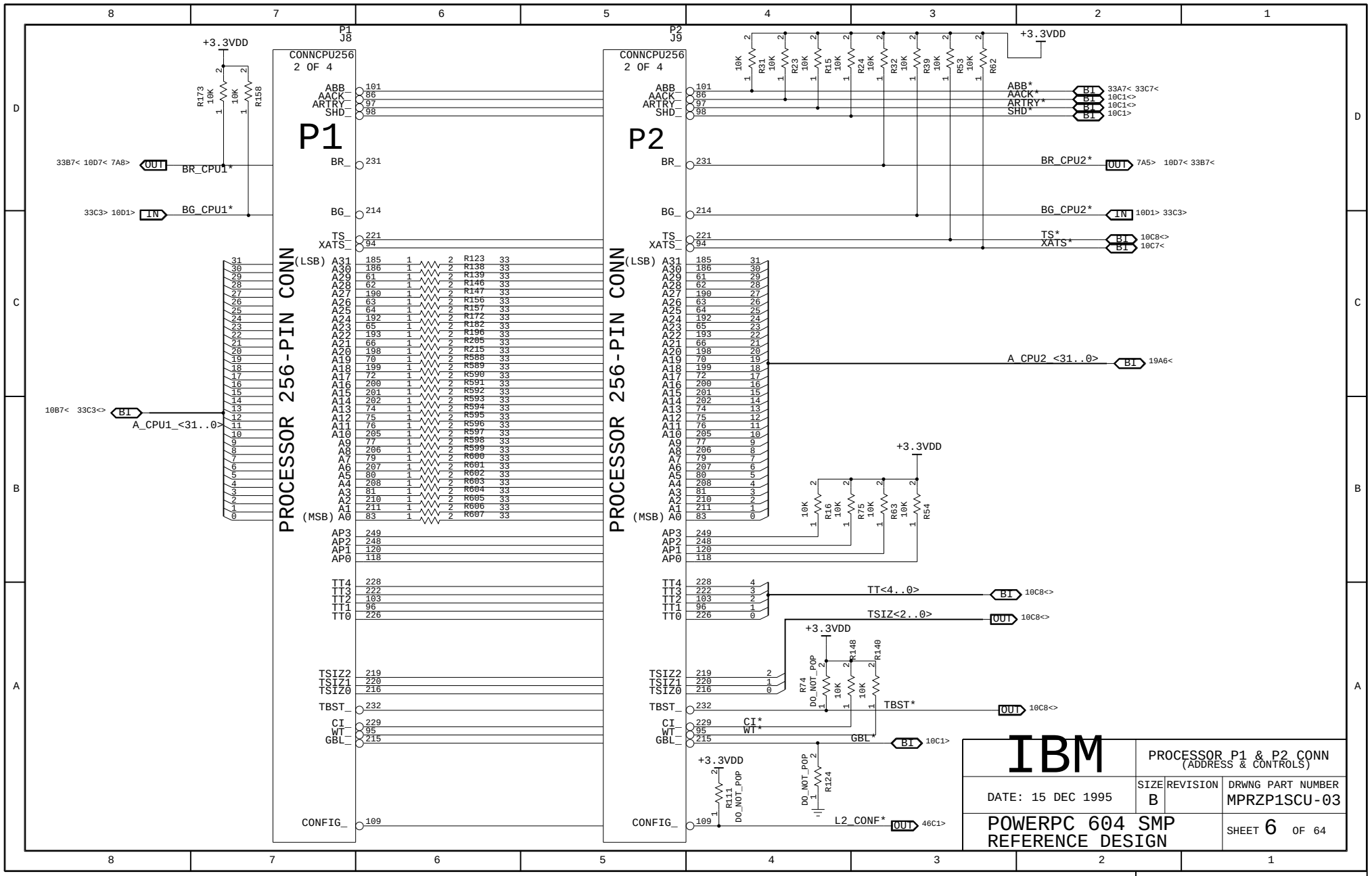
P1
J8
CONNCPU256
2 OF 4
PROCESSOR 256-PIN CONN
P2
J9
CONNCPU256
2 OF 4
PROCESSOR 256-PIN CONN
+3.3VDD
ABB
AACK_
ARTRY_
SHD_
BR_
BG_
TS_
XATS_
(LSB) A31
(MSB) A0
AP3
AP2
AP1
AP0
TT4
TT3
TT2
TT1
TT0
TSIZ2
TSIZ1
TSIZ0
TBST_
CI_
WT_
GBL_
CONFIG_
BR_CPU1*
BG_CPU1*
A_CPU1_<31..0>
BR_CPU2*
BG_CPU2*
A_CPU2 <31..0>
TT<4..0>
TSIZ<2..0>
TBST*
CI*
WT*
GBL*
L2_CONF*
DO_NOT_POP
IBM
PROCESSOR P1 & P2 CONN
(ADDRESS & CONTROLS)
DATE: 15 DEC 1995
SIZE B
REVISION
DRWNG PART NUMBER
MPRZP1SCU-03
POWERPC 604 SMP
REFERENCE DESIGN
SHEET 6 OF 64
MOTHERBOARD

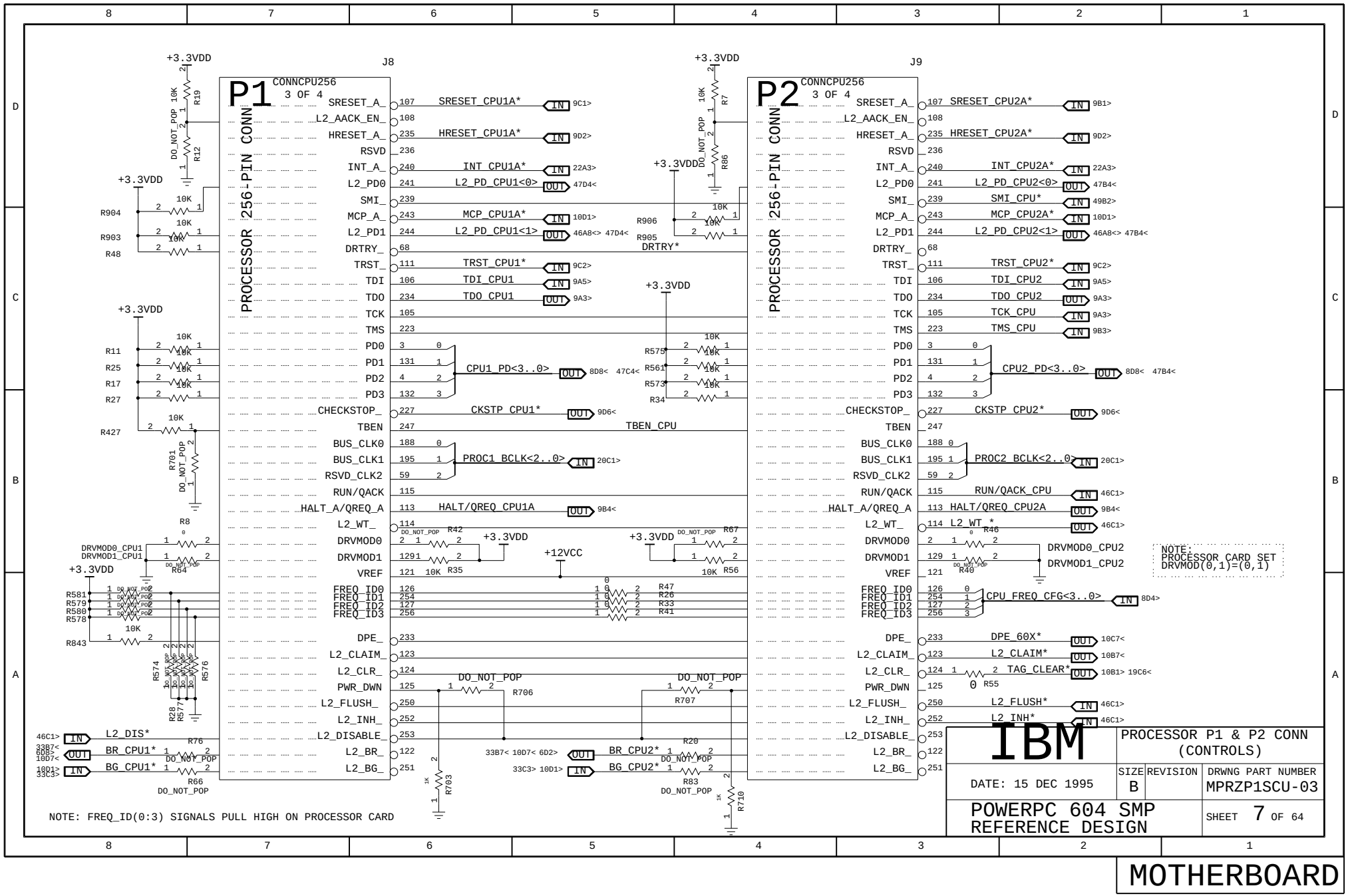
P1
CONNCPU256
3 OF 4
PROCESSOR 256-PIN CONN
J8
P2
CONNCPU256
3 OF 4
PROCESSOR 256-PIN CONN
J9
+3.3VDD
SRESET_A_
L2_AACK_EN_
HRESET_A_
RSVD
INT_A_
L2_PD0
SMI_
MCP_A_
L2_PD1
DRTRY_
TRST_
TDI
TDO
TCK
TMS
PD0
PD1
PD2
PD3
CHECKSTOP_
TBEN
BUS_CLK0
BUS_CLK1
RSVD_CLK2
RUN/QACK
HALT_A/QREQ_A
L2_WT_
DRVMOD0
DRVMOD1
VREF
FREQ_ID0
FREQ_ID1
FREQ_ID2
FREQ_ID3
DPE_
L2_CLAIM_
L2_CLR_
PWR_DWN
L2_FLUSH_
L2_INH_
L2_DISABLE_
L2_BR_
L2_BG_
SRESET_CPU1A*
HRESET_CPU1A*
INT_CPU1A*
L2_PD_CPU1<0>
MCP_CPU1A*
L2_PD_CPU1<1>
TRST_CPU1*
TDI_CPU1
TDO_CPU1
CPU1_PD<3..0>
CKSTP_CPU1*
TBEN_CPU
PROC1_BCLK<2..0>
HALT/QREQ_CPU1A
DRVMOD0_CPU1
DRVMOD1_CPU1
FREQ_ID0
FREQ_ID1
FREQ_ID2
FREQ_ID3
L2_DIS*
BR_CPU1*
BG_CPU1*
DRTRY*
BR_CPU2*
BG_CPU2*
SRESET_CPU2A*
HRESET_CPU2A*
INT_CPU2A*
L2_PD_CPU2<0>
SMI_CPU*
MCP_CPU2A*
L2_PD_CPU2<1>
TRST_CPU2*
TDI_CPU2
TDO_CPU2
TCK_CPU
TMS_CPU
CPU2_PD<3..0>
CKSTP_CPU2*
PROC2_BCLK<2..0>
RUN/QACK_CPU
HALT/QREQ_CPU2A
L2_WT_*
DRVMOD0_CPU2
DRVMOD1_CPU2
CPU_FREQ_CFG<3..0>
DPE_60X*
L2_CLAIM*
TAG_CLEAR*
L2_FLUSH*
L2_INH*
NOTE:
PROCESSOR CARD SET
DRVMOD(0,1)=(0,1)
NOTE: FREQ_ID(0:3) SIGNALS PULL HIGH ON PROCESSOR CARD
DO_NOT_POP
IBM
PROCESSOR P1 & P2 CONN
(CONTROLS)
DATE: 15 DEC 1995
SIZE
B
REVISION
DRWNG PART NUMBER
MPRZP1SCU-03
POWERPC 604 SMP
REFERENCE DESIGN
SHEET 7 OF 64
MOTHERBOARD

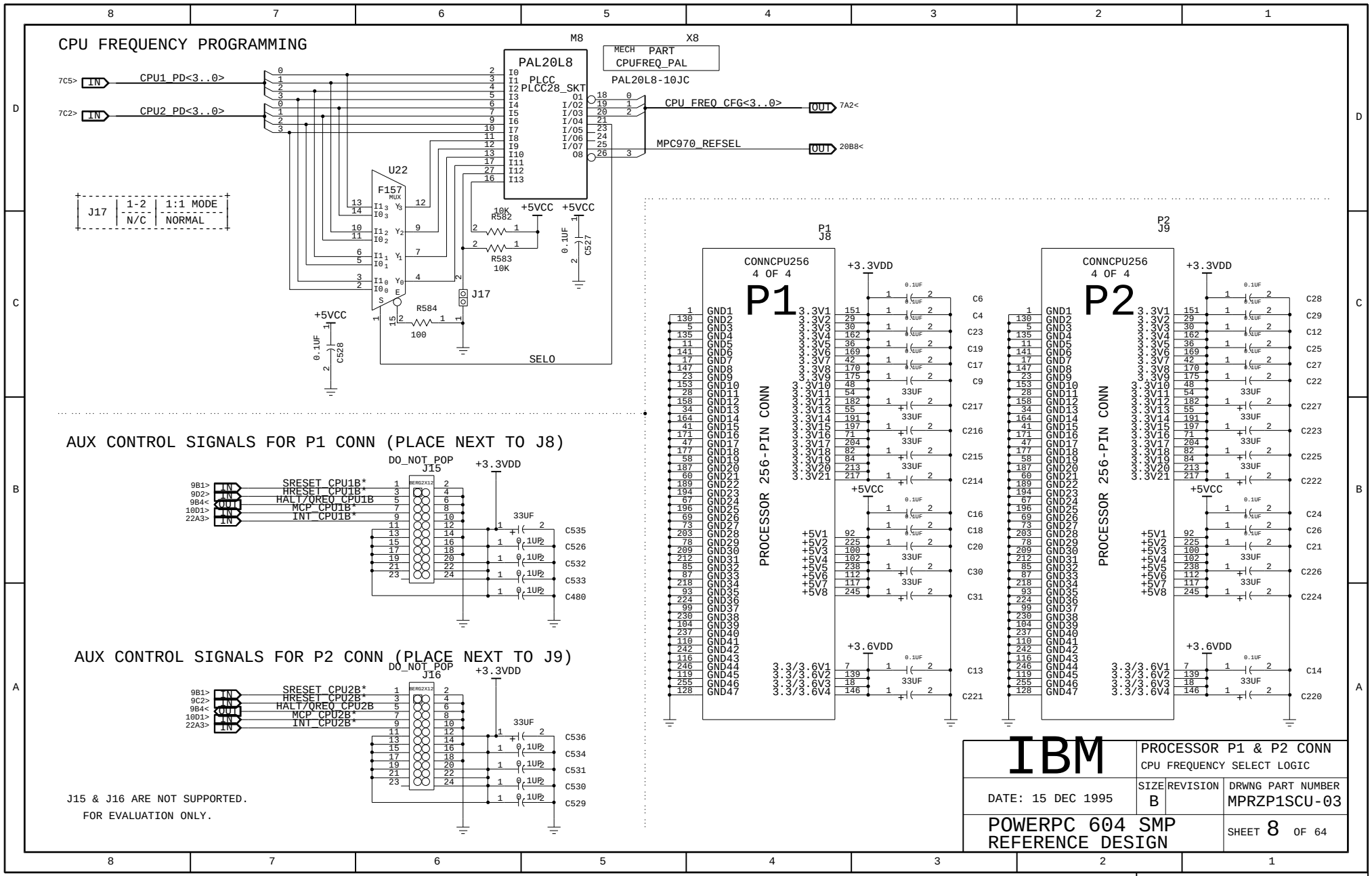
CPU FREQUENCY PROGRAMMING
M8
X8
MECH PART
CPUFREQ_PAL
PAL20L8
PLCC
PLCC28_SKT
PAL20L8-10JC
7C5> IN CPU1_PD<3..0>
7C2> IN CPU2_PD<3..0>
CPU_FREQ_CFG<3..0> OUT 7A2<
MPC970_REFSEL OUT 20B8<
U22
F157
MUX
J17 1-2 N/C 1:1 MODE NORMAL
+5VCC
R582 10K
R583 10K
R584 100
C527 0.1UF
C528 0.1UF
J17
SEL0
AUX CONTROL SIGNALS FOR P1 CONN (PLACE NEXT TO J8)
DO_NOT_POP
J15
+3.3VDD
9B1> IN SRESET_CPU1B*
9D2> IN HRESET_CPU1B*
9B4< OUT HALT/OREQ_CPU1B
10D1> IN MCP_CPU1B*
22A3> IN INT_CPU1B*
33UF
C535
C526
C532
C533
C480
AUX CONTROL SIGNALS FOR P2 CONN (PLACE NEXT TO J9)
DO_NOT_POP
J16
+3.3VDD
9B1> IN SRESET_CPU2B*
9C2> IN HRESET_CPU2B*
9B4< OUT HALT/OREQ_CPU2B
10D1> IN MCP_CPU2B*
22A3> IN INT_CPU2B*
33UF
C536
C534
C531
C530
C529
J15 & J16 ARE NOT SUPPORTED.
FOR EVALUATION ONLY.
P1
J8
CONNCPU256
4 OF 4
PROCESSOR 256-PIN CONN
+3.3VDD
+5VCC
+3.6VDD
P2
J9
IBM
PROCESSOR P1 & P2 CONN
CPU FREQUENCY SELECT LOGIC
DATE: 15 DEC 1995
SIZE B
REVISION
DRWNG PART NUMBER
MPRZP1SCU-03
POWERPC 604 SMP
REFERENCE DESIGN
SHEET 8 OF 64
MOTHERBOARD

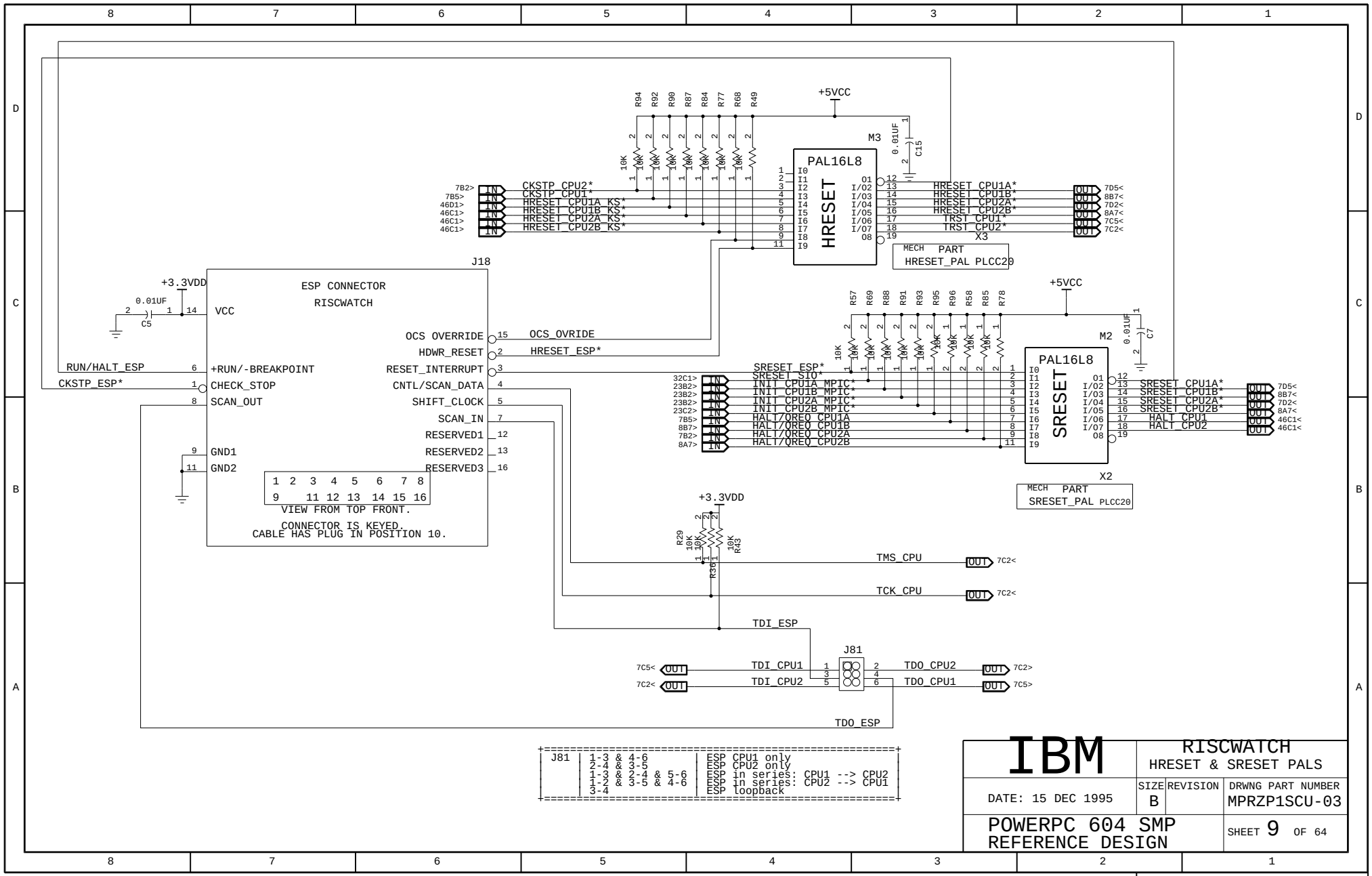
+5VCC
M3
PAL16L8
HRESET
X3
MECH PART
HRESET_PAL PLCC20
CKSTP_CPU2*
CKSTP_CPU1*
HRESET_CPU1A_KS*
HRESET_CPU1B_KS*
HRESET_CPU2A_KS*
HRESET_CPU2B_KS*
HRESET_CPU1A*
HRESET_CPU1B*
HRESET_CPU2A*
HRESET_CPU2B*
TRST_CPU1*
TRST_CPU2*
J18
ESP CONNECTOR
RISCWATCH
+3.3VDD
0.01UF
C5
VCC
OCS OVERRIDE
HDWR_RESET
RESET_INTERRUPT
CNTL/SCAN_DATA
SHIFT_CLOCK
SCAN_IN
RESERVED1
RESERVED2
RESERVED3
RUN/HALT_ESP
CKSTP_ESP*
+RUN/-BREAKPOINT
CHECK_STOP
SCAN_OUT
GND1
GND2
OCS_OVRIDE
HRESET_ESP*
VIEW FROM TOP FRONT.
CONNECTOR IS KEYED.
CABLE HAS PLUG IN POSITION 10.
M2
PAL16L8
SRESET
X2
MECH PART
SRESET_PAL PLCC20
SRESET_ESP*
SRESET_SIO*
INIT_CPU1A_MPIC*
INIT_CPU1B_MPIC*
INIT_CPU2A_MPIC*
INIT_CPU2B_MPIC*
HALT/QREQ_CPU1A
HALT/QREQ_CPU1B
HALT/QREQ_CPU2A
HALT/QREQ_CPU2B
SRESET_CPU1A*
SRESET_CPU1B*
SRESET_CPU2A*
SRESET_CPU2B*
HALT_CPU1
HALT_CPU2
TMS_CPU
TCK_CPU
TDI_ESP
J81
TDI_CPU1
TDI_CPU2
TDO_CPU2
TDO_CPU1
TDO_ESP
J81 | 1-3 & 4-6 | ESP CPU1 only
2-4 & 3-5 | ESP CPU2 only
1-3 & 2-4 & 5-6 | ESP in series: CPU1 --> CPU2
1-2 & 3-5 & 4-6 | ESP in series: CPU2 --> CPU1
3-4 | ESP loopback
IBM
RISCWATCH
HRESET & SRESET PALS
DATE: 15 DEC 1995
SIZE B
REVISION
DRWNG PART NUMBER
MPRZP1SCU-03
POWERPC 604 SMP
REFERENCE DESIGN
SHEET 9 OF 64
MOTHERBOARD

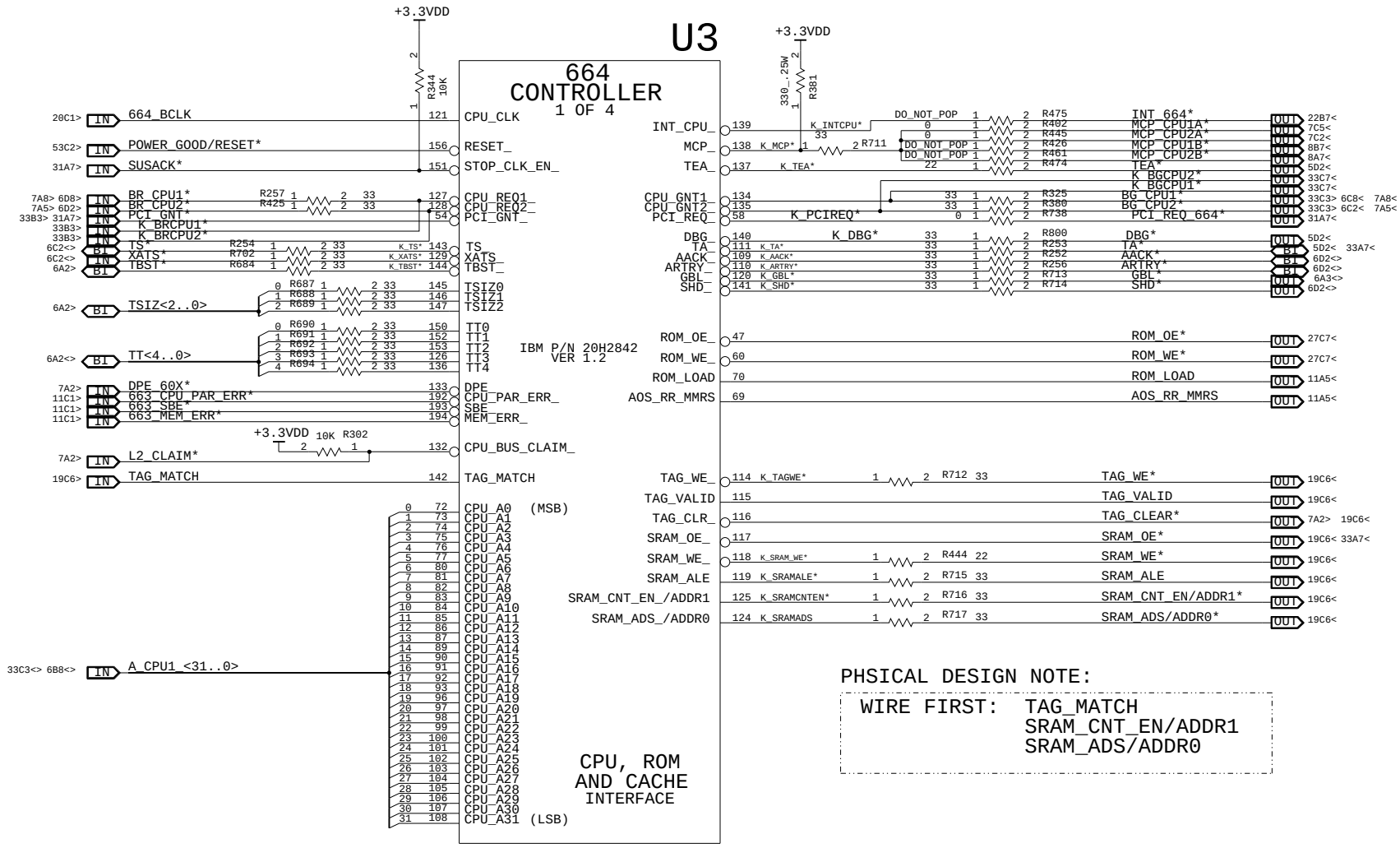

PHSICAL DESIGN NOTE:

WIRE FIRST: TAG_MATCH
SRAM_CNT_EN/ADDR1
SRAM_ADS/ADDR0

PHYSICAL DESIGN NOTE:

ALL SERIES RESISTORS MUST BE PLACED AS CLOSE TO 664 AS POSSIBLE.
0 OHM PLACEMENT IS NOT CRITICAL.

IBM	664 CONTROLLER CENTRAL CONTROL PORTION		
DATE: 15 DEC 1995	SIZE B	REVISION	DRWNG PART NUMBER MPRZP1SCU-03
POWERPC 604 SMP REFERENCE DESIGN			SHEET 10 OF 64

MOTHERBOARD

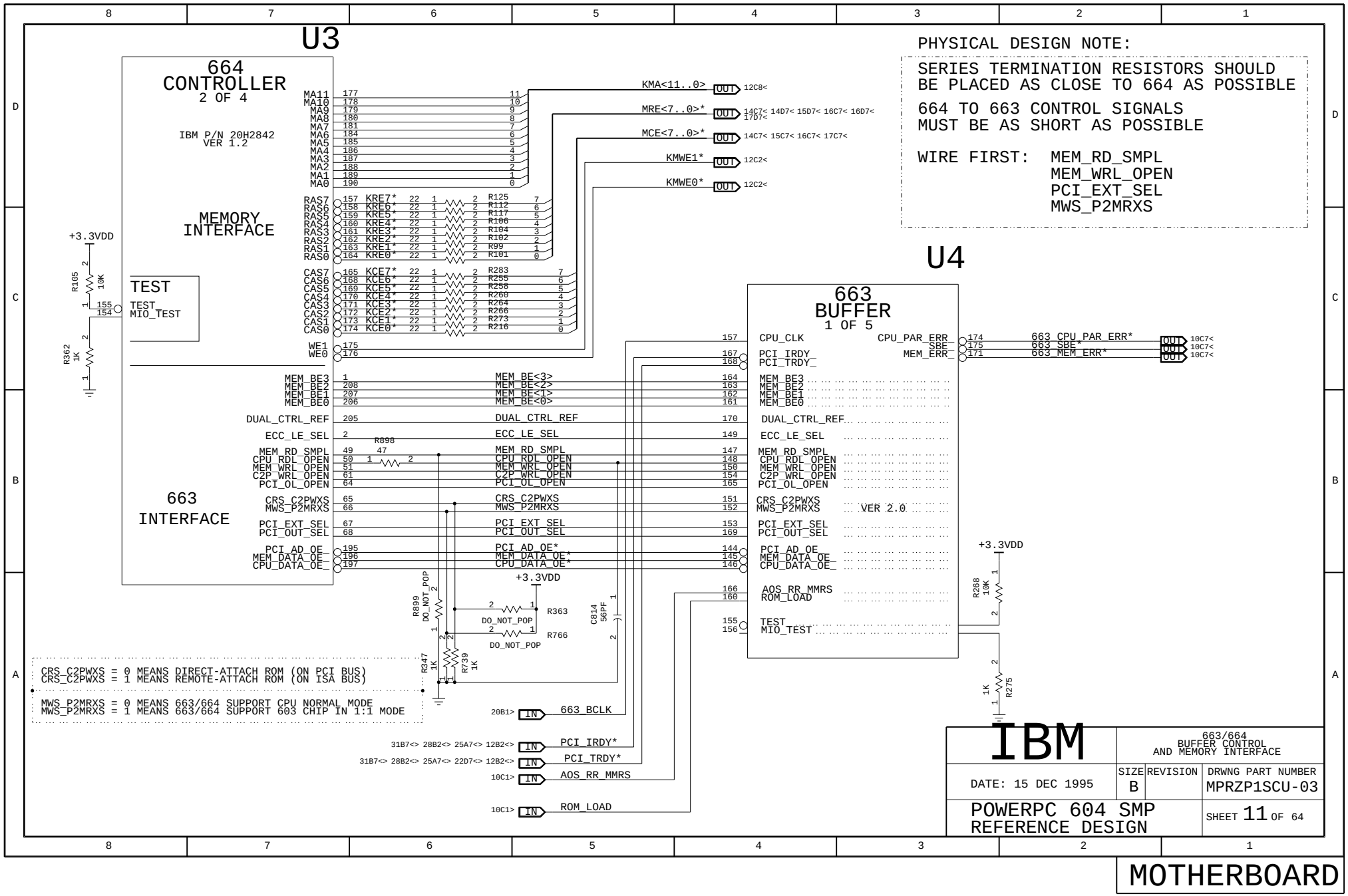
U3
664 CONTROLLER
2 OF 4
IBM P/N 20H2842
VER 1.2
MEMORY INTERFACE
TEST
TEST_
MIO_TEST
663 INTERFACE
+3.3VDD
R105 10K
R362 1K
MA11 MA10 MA9 MA8 MA7 MA6 MA5 MA4 MA3 MA2 MA1 MA0
RAS7 RAS6 RAS5 RAS4 RAS3 RAS2 RAS1 RAS0
KRE7* KRE6* KRE5* KRE4* KRE3* KRE2* KRE1* KRE0*
R125 R112 R117 R106 R104 R102 R99 R101
CAS7 CAS6 CAS5 CAS4 CAS3 CAS2 CAS1 CAS0
KCE7* KCE6* KCE5* KCE4* KCE3* KCE2* KCE1* KCE0*
R283 R255 R258 R260 R264 R266 R273 R216
WE1 WE0
MEM_BE3 MEM_BE2 MEM_BE1 MEM_BE0
DUAL_CTRL_REF
ECC_LE_SEL
MEM_RD_SMPL
CPU_RDL_OPEN
MEM_WRL_OPEN
C2P_WRL_OPEN
PCI_OL_OPEN
CRS_C2PWXS
MWS_P2MRXS
PCI_EXT_SEL
PCI_OUT_SEL
PCI_AD_OE_
MEM_DATA_OE_
CPU_DATA_OE_
R898 47
R899 DO_NOT_POP
R363 DO_NOT_POP
R766 DO_NOT_POP
R347 1K
R739 1K
C814 56PF
KMA<11..0> OUT 12C8<
MRE<7..0>* OUT 14C7< 14D7< 15D7< 16C7< 16D7< 17D7<
MCE<7..0>* OUT 14C7< 15C7< 16C7< 17C7<
KMWE1* OUT 12C2<
KMWE0* OUT 12C2<
PHYSICAL DESIGN NOTE:
SERIES TERMINATION RESISTORS SHOULD BE PLACED AS CLOSE TO 664 AS POSSIBLE
664 TO 663 CONTROL SIGNALS MUST BE AS SHORT AS POSSIBLE
WIRE FIRST: MEM_RD_SMPL
MEM_WRL_OPEN
PCI_EXT_SEL
MWS_P2MRXS
U4
663 BUFFER
1 OF 5
CPU_CLK
PCI_IRDY_
PCI_TRDY_
MEM_BE3 MEM_BE2 MEM_BE1 MEM_BE0
DUAL_CTRL_REF
ECC_LE_SEL
MEM_RD_SMPL
CPU_RDL_OPEN
MEM_WRL_OPEN
C2P_WRL_OPEN
PCI_OL_OPEN
CRS_C2PWXS
MWS_P2MRXS
VER 2.0
PCI_EXT_SEL
PCI_OUT_SEL
PCI_AD_OE
MEM_DATA_OE_
CPU_DATA_OE_
AOS_RR_MMRS
ROM_LOAD
TEST_
MIO_TEST
CPU_PAR_ERR_
SBE_
MEM_ERR_
663_CPU_PAR_ERR* OUT 10C7<
663_SBE* OUT 10C7<
663_MEM_ERR* OUT 10C7<
R268 10K
R275 1K
CRS_C2PWXS = 0 MEANS DIRECT-ATTACH ROM (ON PCI BUS)
CRS_C2PWXS = 1 MEANS REMOTE-ATTACH ROM (ON ISA BUS)
MWS_P2MRXS = 0 MEANS 663/664 SUPPORT CPU NORMAL MODE
MWS_P2MRXS = 1 MEANS 663/664 SUPPORT 603 CHIP IN 1:1 MODE
20B1> IN 663_BCLK
31B7<> 28B2<> 25A7<> 12B2<> IN PCI_IRDY*
31B7<> 28B2<> 25A7<> 22D7<> 12B2<> IN PCI_TRDY*
10C1> IN AOS_RR_MMRS
10C1> IN ROM_LOAD
IBM
663/664 BUFFER CONTROL AND MEMORY INTERFACE
DATE: 15 DEC 1995
SIZE B
REVISION
DRWNG PART NUMBER MPRZP1SCU-03
POWERPC 604 SMP REFERENCE DESIGN
SHEET 11 OF 64
MOTHERBOARD

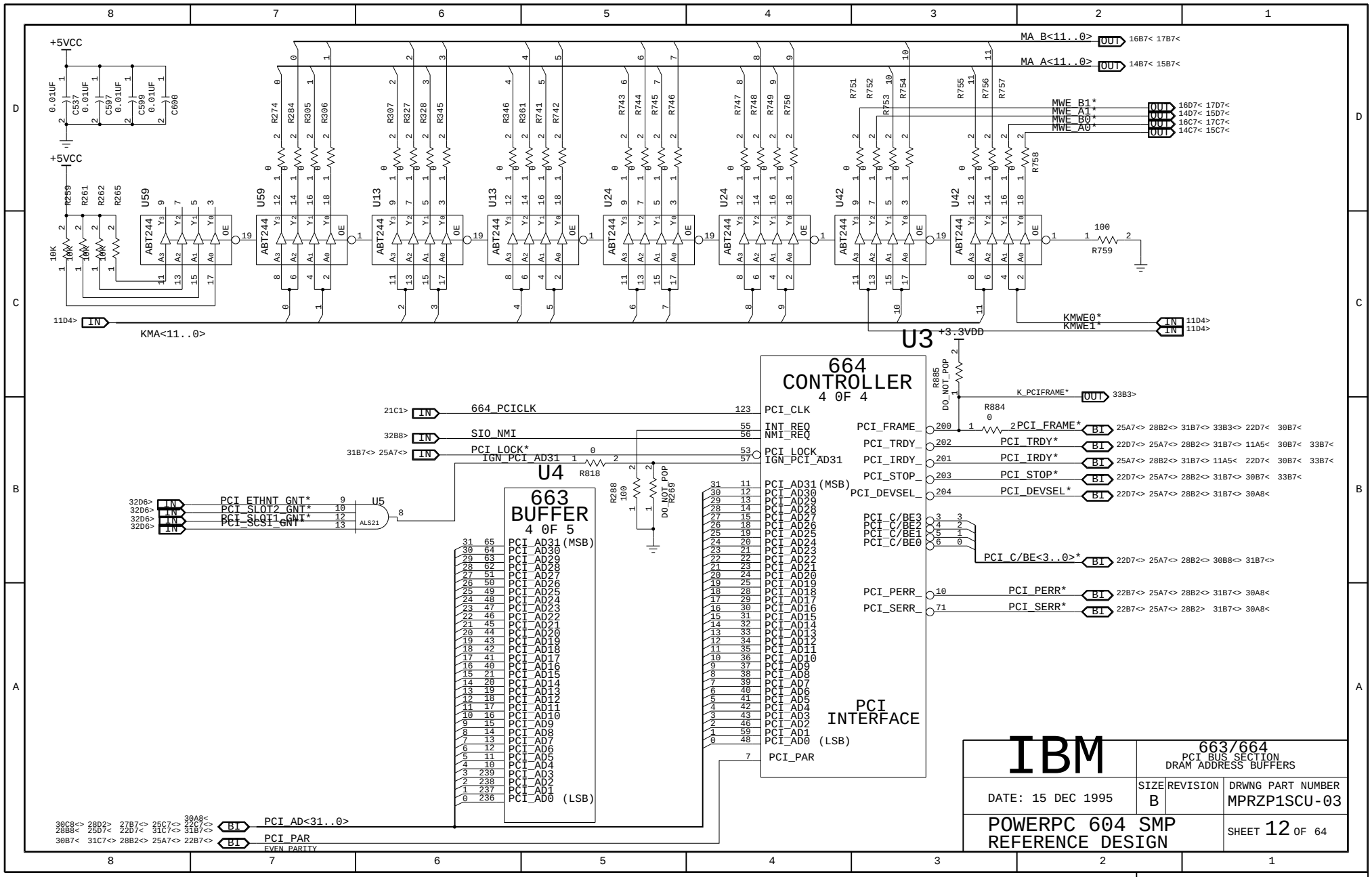
+5VCC
MA_B<11..0>
MA_A<11..0>
MWE_B1*
MWE_A1*
MWE_B0*
MWE_A0*
KMWE0*
KMWE1*
KMA<11..0>
ABT244
U59
U13
U24
U42
R759
U3
+3.3VDD
664 CONTROLLER
4 0F 4
PCI INTERFACE
PCI_CLK
INT_REQ
NMI_REQ
PCI_LOCK
IGN_PCI_AD31
PCI_FRAME_
PCI_TRDY_
PCI_IRDY_
PCI_STOP_
PCI_DEVSEL_
PCI_C/BE3
PCI_C/BE2
PCI_C/BE1
PCI_C/BE0
PCI_PERR_
PCI_SERR_
PCI_PAR
664_PCICLK
SIO_NMI
PCI_LOCK*
K_PCIFRAME*
PCI_FRAME*
PCI_TRDY*
PCI_IRDY*
PCI_STOP*
PCI_DEVSEL*
PCI_C/BE<3..0>*
PCI_PERR*
PCI_SERR*
U4
663 BUFFER
4 0F 5
PCI_AD31(MSB)
PCI_AD0 (LSB)
PCI_ETHNT_GNT*
PCI_SLOT2_GNT*
PCI_SLOT1_GNT*
PCI_SCSI_GNT*
U5
ALS21
PCI_AD<31..0>
PCI_PAR
EVEN_PARITY
IBM
663/664
PCI BUS SECTION
DRAM ADDRESS BUFFERS
DATE: 15 DEC 1995
SIZE B
REVISION
DRWNG PART NUMBER
MPRZP1SCU-03
POWERPC 604 SMP
REFERENCE DESIGN
SHEET 12 OF 64
MOTHERBOARD

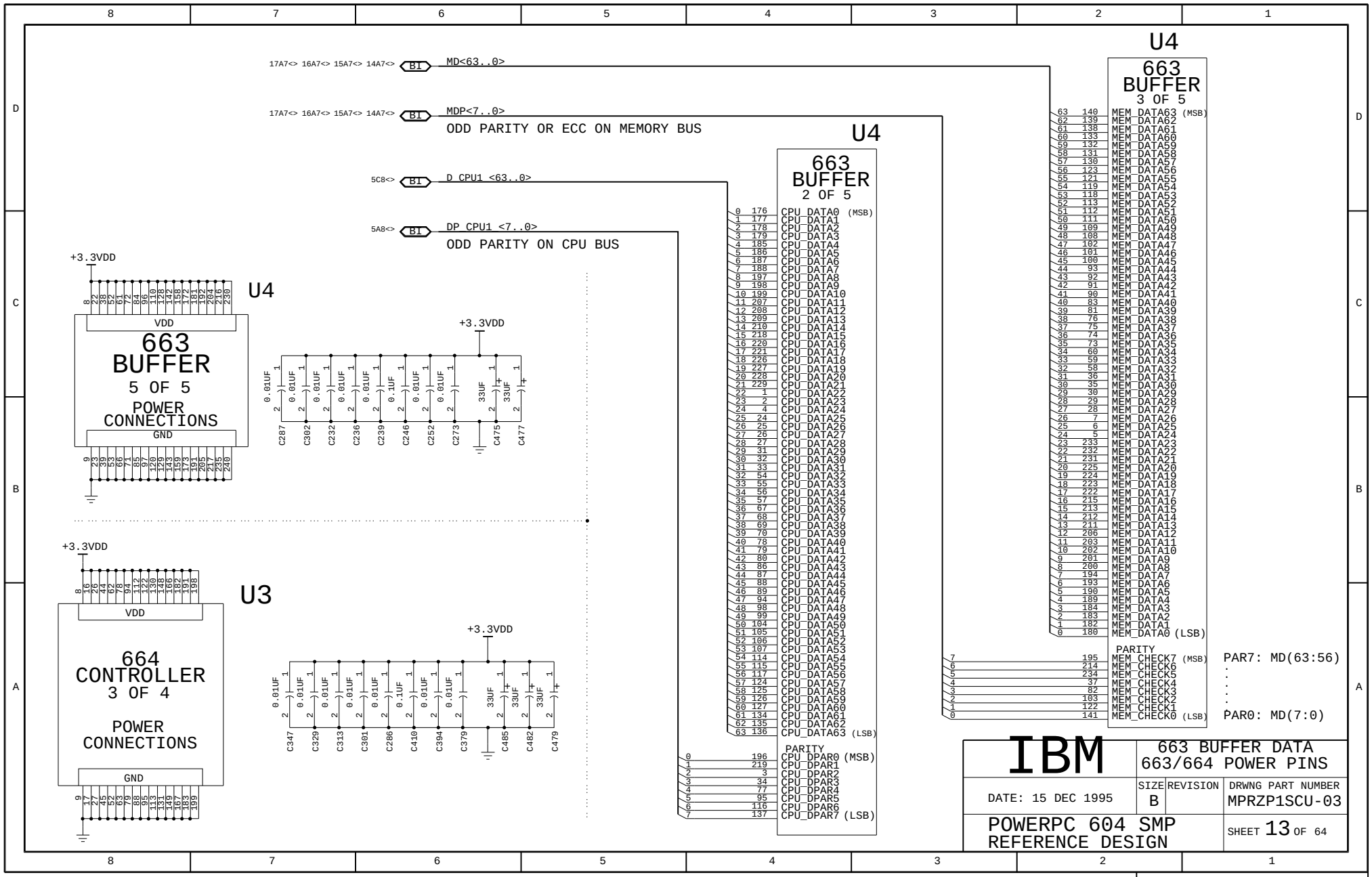
U4
663 BUFFER
3 OF 5
MD<63..0>
MDP<7..0>
ODD PARITY OR ECC ON MEMORY BUS
D CPU1 <63..0>
DP CPU1 <7..0>
ODD PARITY ON CPU BUS
U4
663 BUFFER
2 OF 5
U4
663 BUFFER
5 OF 5
POWER CONNECTIONS
U3
664 CONTROLLER
3 OF 4
POWER CONNECTIONS
+3.3VDD
VDD
GND
PARITY
PAR7: MD(63:56)
PAR0: MD(7:0)
IBM
663 BUFFER DATA
663/664 POWER PINS
DATE: 15 DEC 1995
SIZE B
REVISION
DRWNG PART NUMBER
MPRZP1SCU-03
POWERPC 604 SMP
REFERENCE DESIGN
SHEET 13 OF 64
MOTHERBOARD

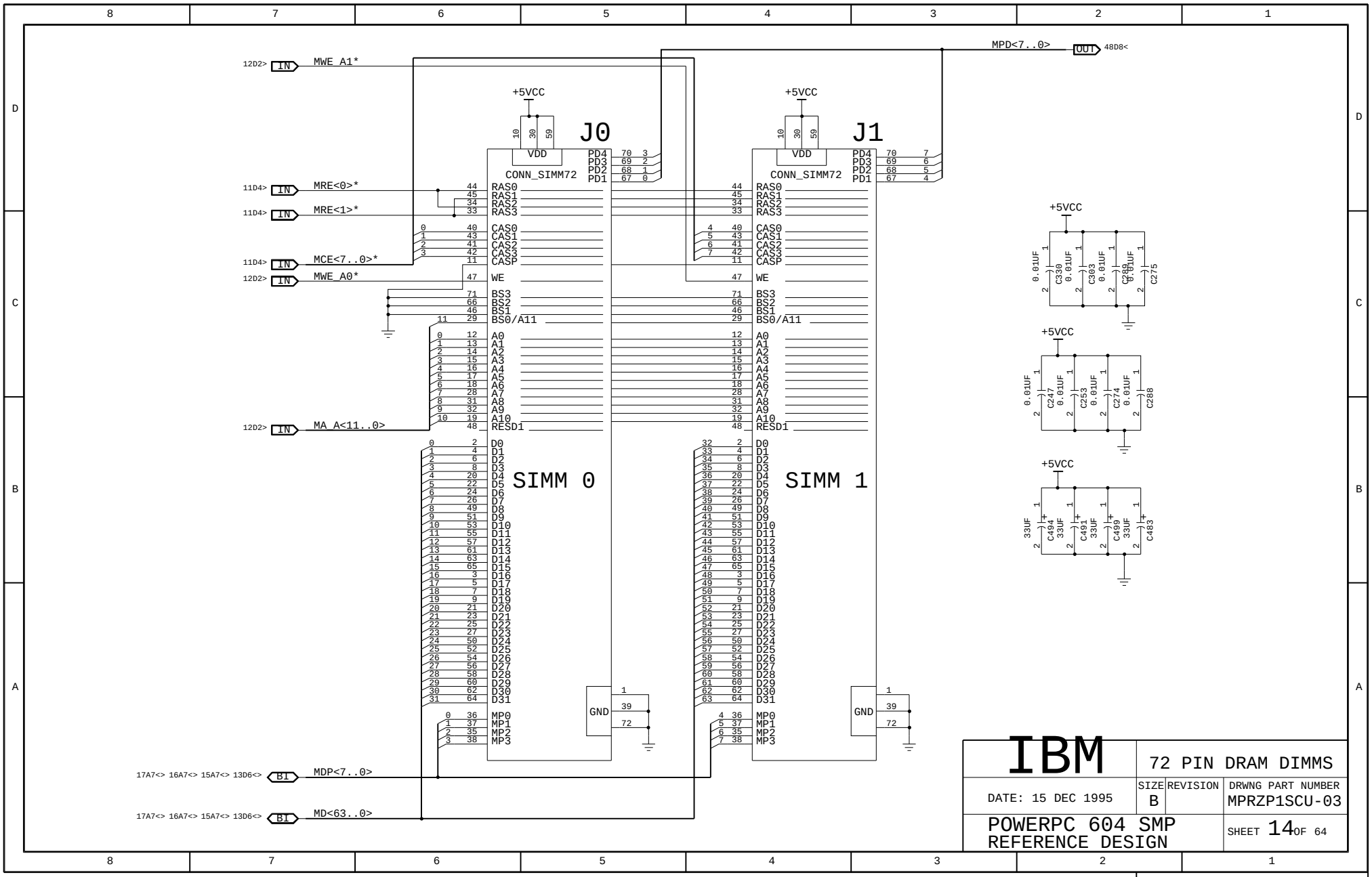
J0
J1
SIMM 0
SIMM 1
CONN_SIMM72
+5VCC
VDD
GND
MWE_A1*
MRE<0>*
MRE<1>*
MCE<7..0>*
MWE_A0*
MA_A<11..0>
MPD<7..0>
MDP<7..0>
MD<63..0>
RAS0
RAS1
RAS2
RAS3
CAS0
CAS1
CAS2
CAS3
CASP
WE
BS3
BS2
BS1
BS0/A11
RESD1
PD4
PD3
PD2
PD1
MP0
MP1
MP2
MP3
C330 0.01UF
C303 0.01UF
C289 0.01UF
C275
C247 0.01UF
C253 0.01UF
C274 0.01UF
C288
C494 33UF
C491 33UF
C499 33UF
C483
IBM
72 PIN DRAM DIMMS
DATE: 15 DEC 1995
SIZE B
REVISION
DRWNG PART NUMBER MPRZP1SCU-03
POWERPC 604 SMP
REFERENCE DESIGN
SHEET 14 OF 64
MOTHERBOARD

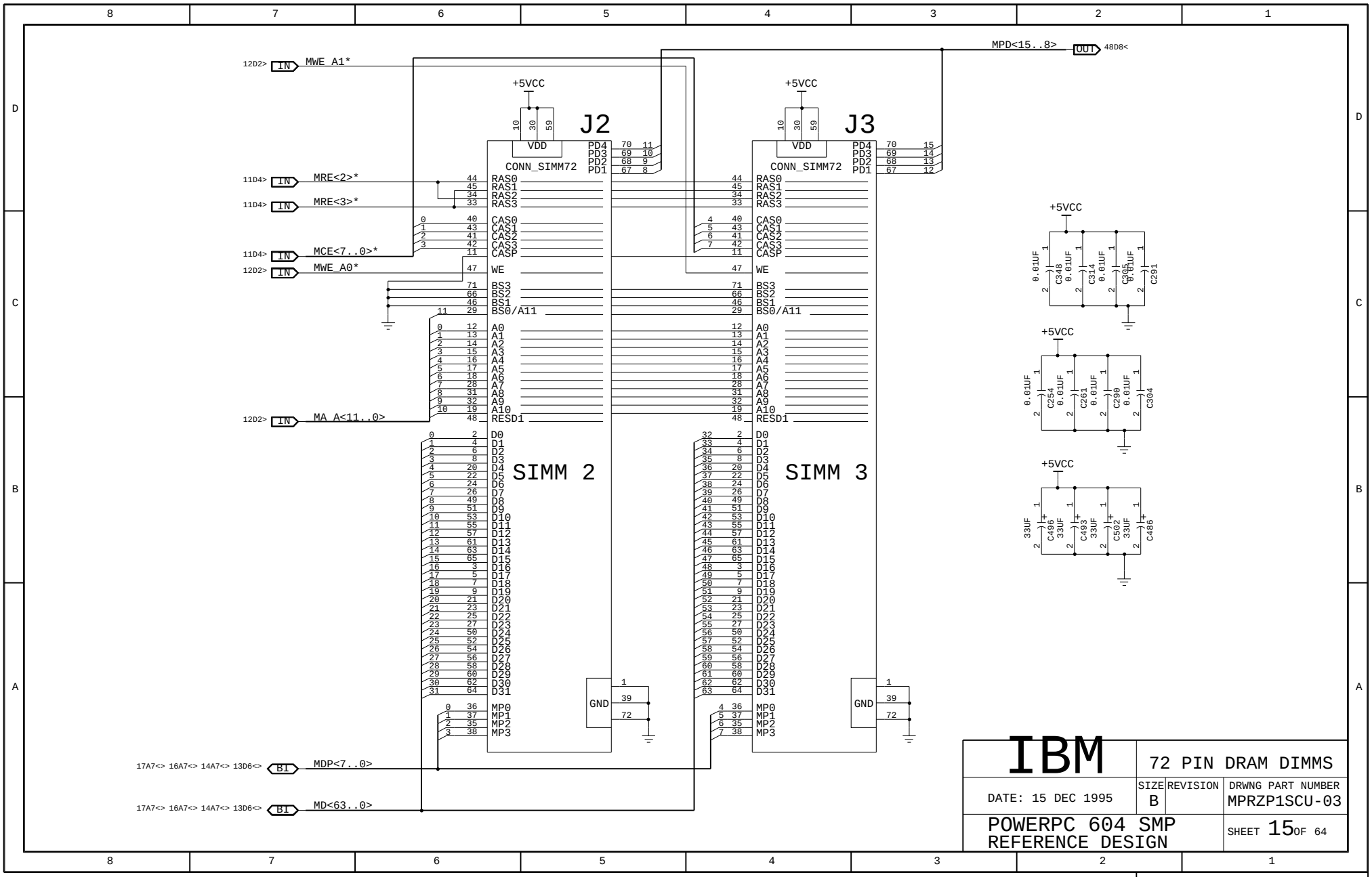
J2
J3
CONN_SIMM72
SIMM 2
SIMM 3
+5VCC
VDD
GND
MPD<15..8>
MWE_A1*
MRE<2>*
MRE<3>*
MCE<7..0>*
MWE_A0*
MA_A<11..0>
MDP<7..0>
MD<63..0>
RAS0
RAS1
RAS2
RAS3
CAS0
CAS1
CAS2
CAS3
CASP
WE
BS3
BS2
BS1
BS0/A11
RESD1
PD4
PD3
PD2
PD1
C348 0.01UF
C314 0.01UF
C305 0.01UF
C291
C254 0.01UF
C261 0.01UF
C290 0.01UF
C304
C496 33UF
C493 33UF
C502 33UF
C486
IBM
72 PIN DRAM DIMMS
DATE: 15 DEC 1995
SIZE B
REVISION
DRWNG PART NUMBER MPRZP1SCU-03
POWERPC 604 SMP
REFERENCE DESIGN
SHEET 15 OF 64
MOTHERBOARD

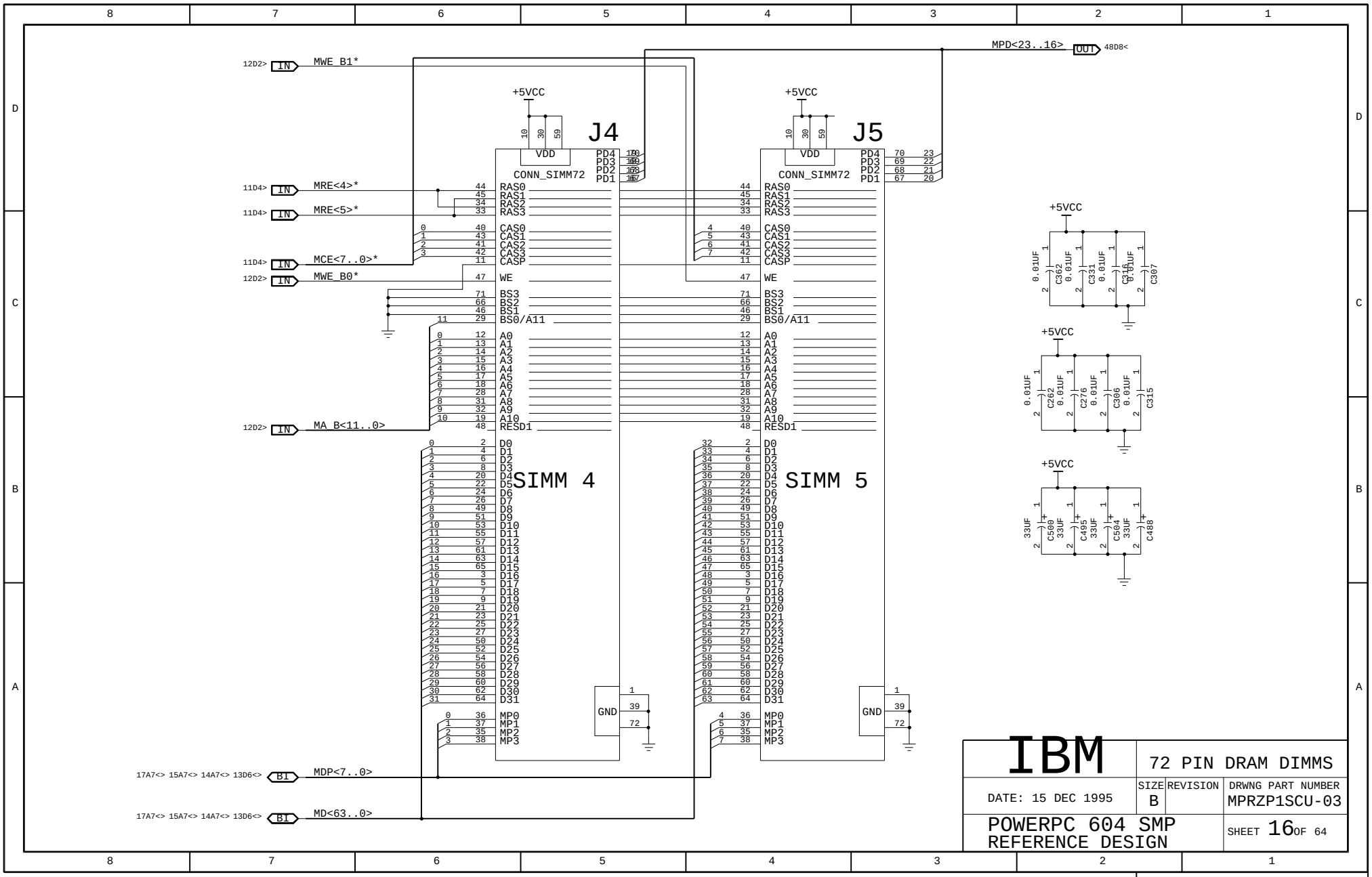

IBM	72 PIN DRAM DIMMS		
DATE: 15 DEC 1995	SIZE B	REVISION	DRWNG PART NUMBER MPRZP1SCU-03
POWERPC 604 SMP REFERENCE DESIGN			SHEET 16 OF 64

MOTHERBOARD

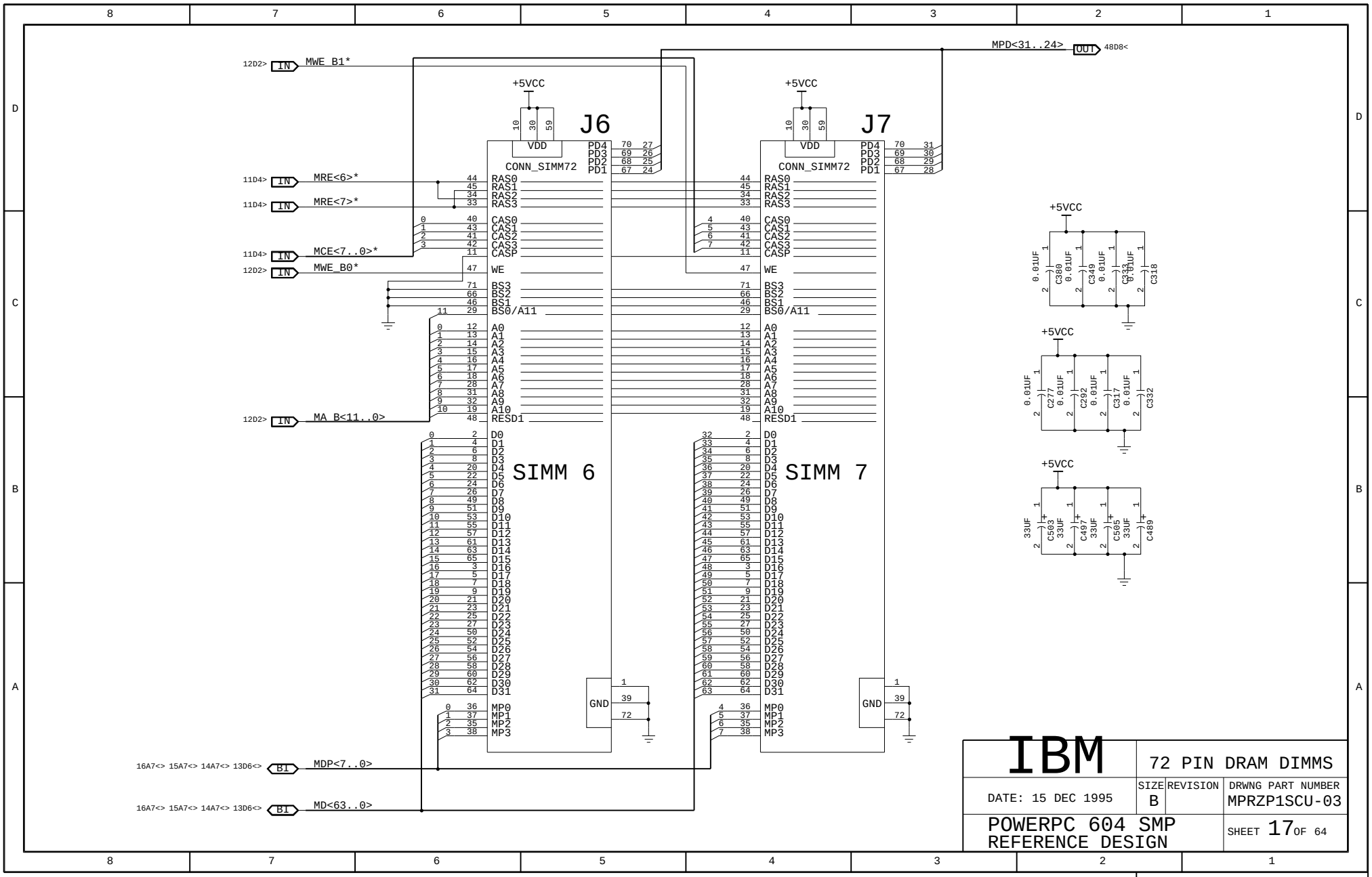

IBM

72 PIN DRAM DIMMS

DATE: 15 DEC 1995

SIZE B | REVISION | DRWNG PART NUMBER MPRZP1SCU-03

POWERPC 604 SMP
REFERENCE DESIGN

SHEET 17 OF 64

MOTHERBOARD

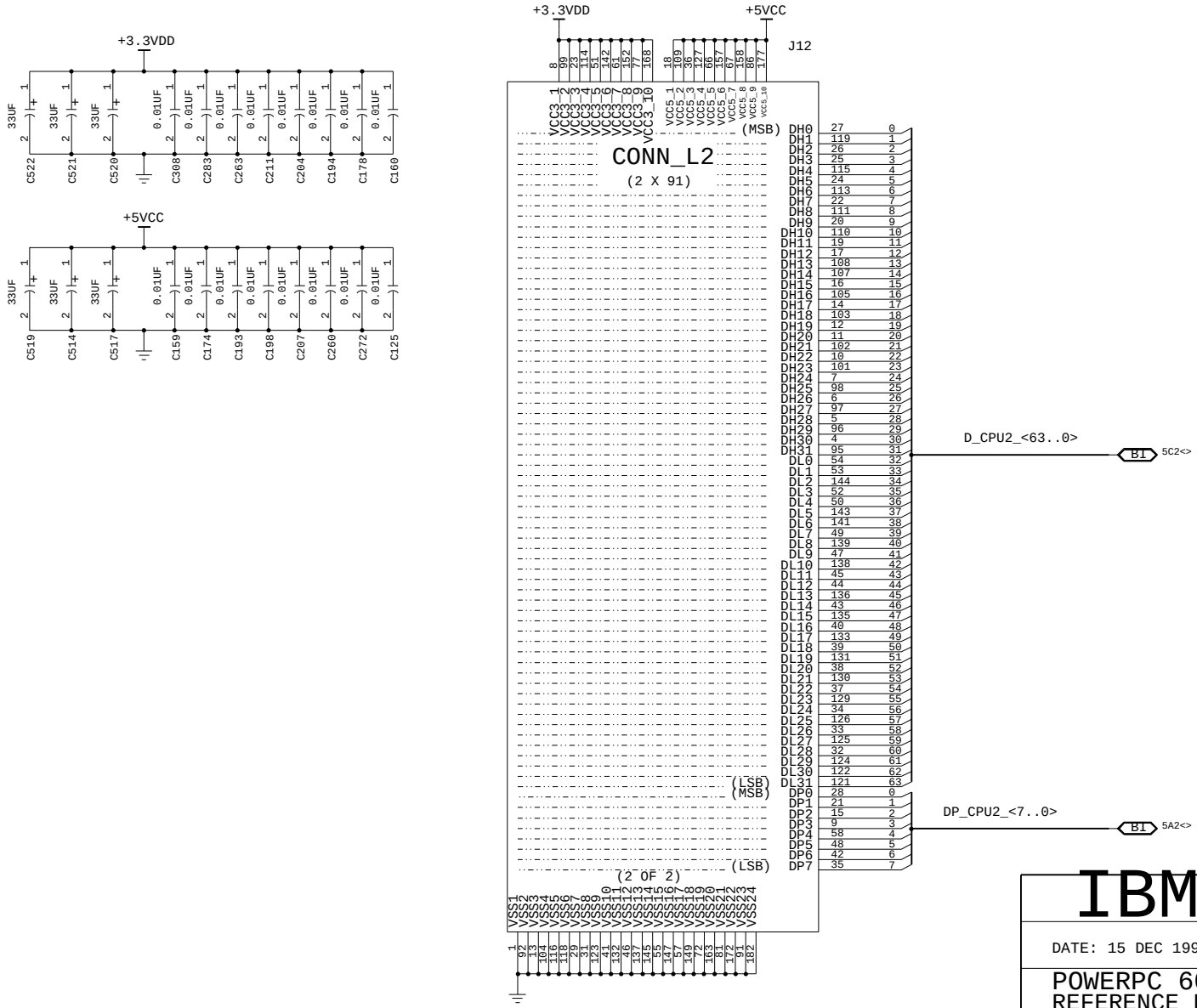

IBM	SRAM+TRAM CONN. (DATA)		
DATE: 15 DEC 1995	SIZE B	REVISION	DRWNG PART NUMBER MPRZP1SCU-03
POWERPC 604 SMP REFERENCE DESIGN	SHEET 18 OF 64		

MOTHERBOARD

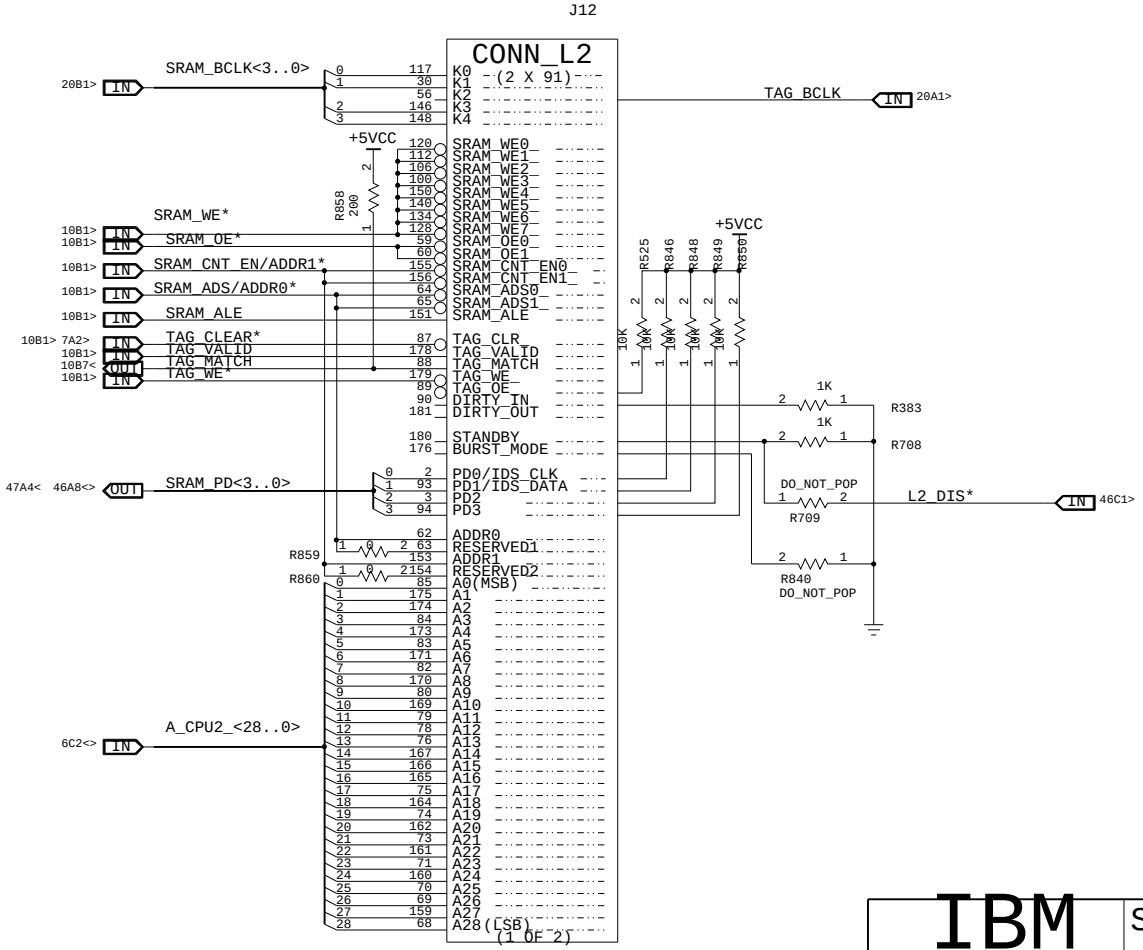

IBM	SRAM+TRAM CONN. (CONTROL)		
DATE: 15 DEC 1995	SIZE B	REVISION	DRWNG PART NUMBER MPRZP1SCU-03
POWERPC 604 SMP REFERENCE DESIGN			SHEET 19 OF 64

MOTHERBOARD

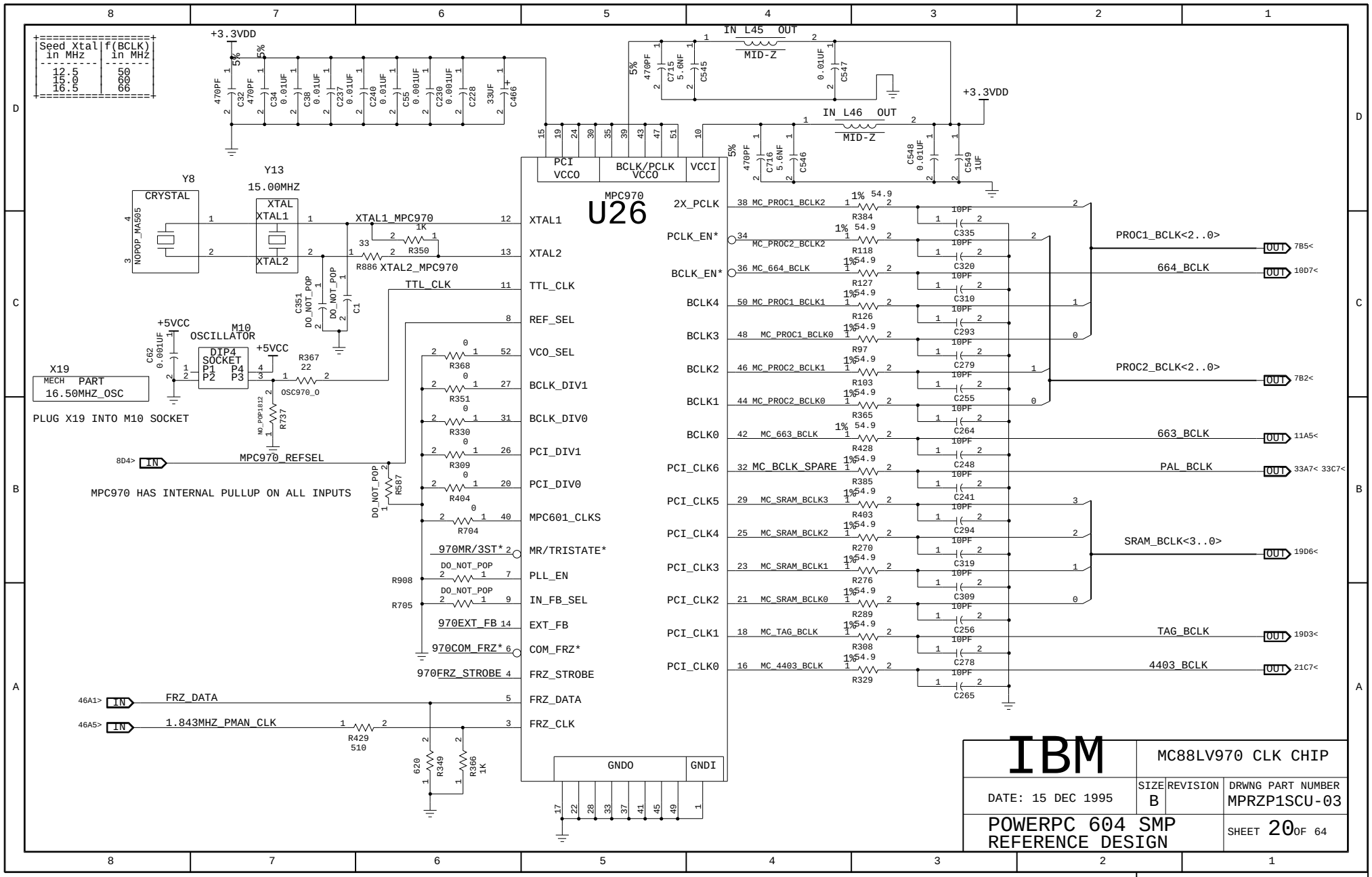
Seed Xtal in MHz | f(BCLK) in MHz
12.5 | 50
15.0 | 60
16.5 | 66
+3.3VDD
IN L45 OUT
MID-Z
IN L46 OUT
MID-Z
Y8
CRYSTAL
NOPOP_MA505
Y13
15.00MHZ
XTAL
XTAL1
XTAL2
XTAL1_MPC970
XTAL2_MPC970
TTL_CLK
+5VCC
M10
OSCILLATOR
DIP4 SOCKET
X19
MECH PART
16.50MHZ_OSC
PLUG X19 INTO M10 SOCKET
MPC970_REFSEL
MPC970 HAS INTERNAL PULLUP ON ALL INPUTS
MPC970
U26
PCI VCCO
BCLK/PCLK VCCO
VCCI
XTAL1
XTAL2
TTL_CLK
REF_SEL
VCO_SEL
BCLK_DIV1
BCLK_DIV0
PCI_DIV1
PCI_DIV0
MPC601_CLKS
MR/TRISTATE*
PLL_EN
IN_FB_SEL
EXT_FB
COM_FRZ*
FRZ_STROBE
FRZ_DATA
FRZ_CLK
970MR/3ST*
970EXT_FB
970COM_FRZ*
970FRZ_STROBE
FRZ_DATA
1.843MHZ_PMAN_CLK
GNDO
GNDI
2X_PCLK
PCLK_EN*
BCLK_EN*
BCLK4
BCLK3
BCLK2
BCLK1
BCLK0
PCI_CLK6
PCI_CLK5
PCI_CLK4
PCI_CLK3
PCI_CLK2
PCI_CLK1
PCI_CLK0
MC_PROC1_BCLK2
MC_PROC2_BCLK2
MC_664_BCLK
MC_PROC1_BCLK1
MC_PROC1_BCLK0
MC_PROC2_BCLK1
MC_PROC2_BCLK0
MC_663_BCLK
MC_BCLK_SPARE
MC_SRAM_BCLK3
MC_SRAM_BCLK2
MC_SRAM_BCLK1
MC_SRAM_BCLK0
MC_TAG_BCLK
MC_4403_BCLK
PROC1_BCLK<2..0>
664_BCLK
PROC2_BCLK<2..0>
663_BCLK
PAL_BCLK
SRAM_BCLK<3..0>
TAG_BCLK
4403_BCLK
IBM
MC88LV970 CLK CHIP
DATE: 15 DEC 1995
SIZE B
REVISION
DRWNG PART NUMBER MPRZP1SCU-03
POWERPC 604 SMP
REFERENCE DESIGN
SHEET 20 OF 64
MOTHERBOARD

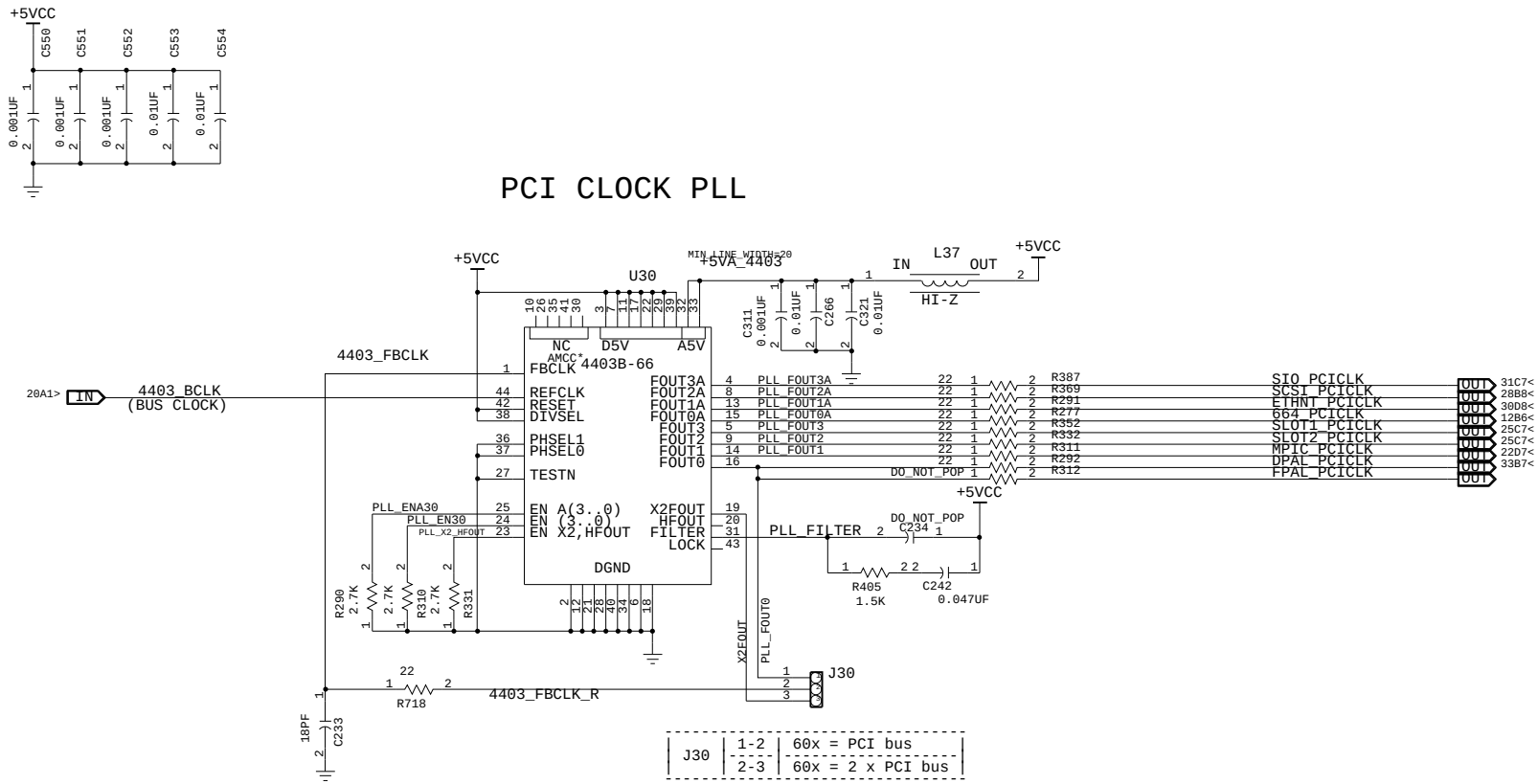

DIVSEL=0 --> VCO freq is divided by 4
DIVSEL=1 --> VCO freq is divided by 8

PHSEL (1:0)	Output fed to FBCLK	Output Phase Relationships		
		Fout(0-3)	HFout	X2Fout(/8)
00	Fout(0-3)	0	0	2(0)
00	X2Fout(/8)	0/2	0/4	0

0 implies the output is aligned with REFCLK
2() implies the output is at twice the freq of REFCLK

IBM	PCI CLOCKS		
DATE: 15 DEC 1995	SIZE B	REVISION	DRWNG PART NUMBER MPRZP1SCU-03
POWERPC 604 SMP REFERENCE DESIGN			SHEET 21 OF 64

MOTHERBOARD

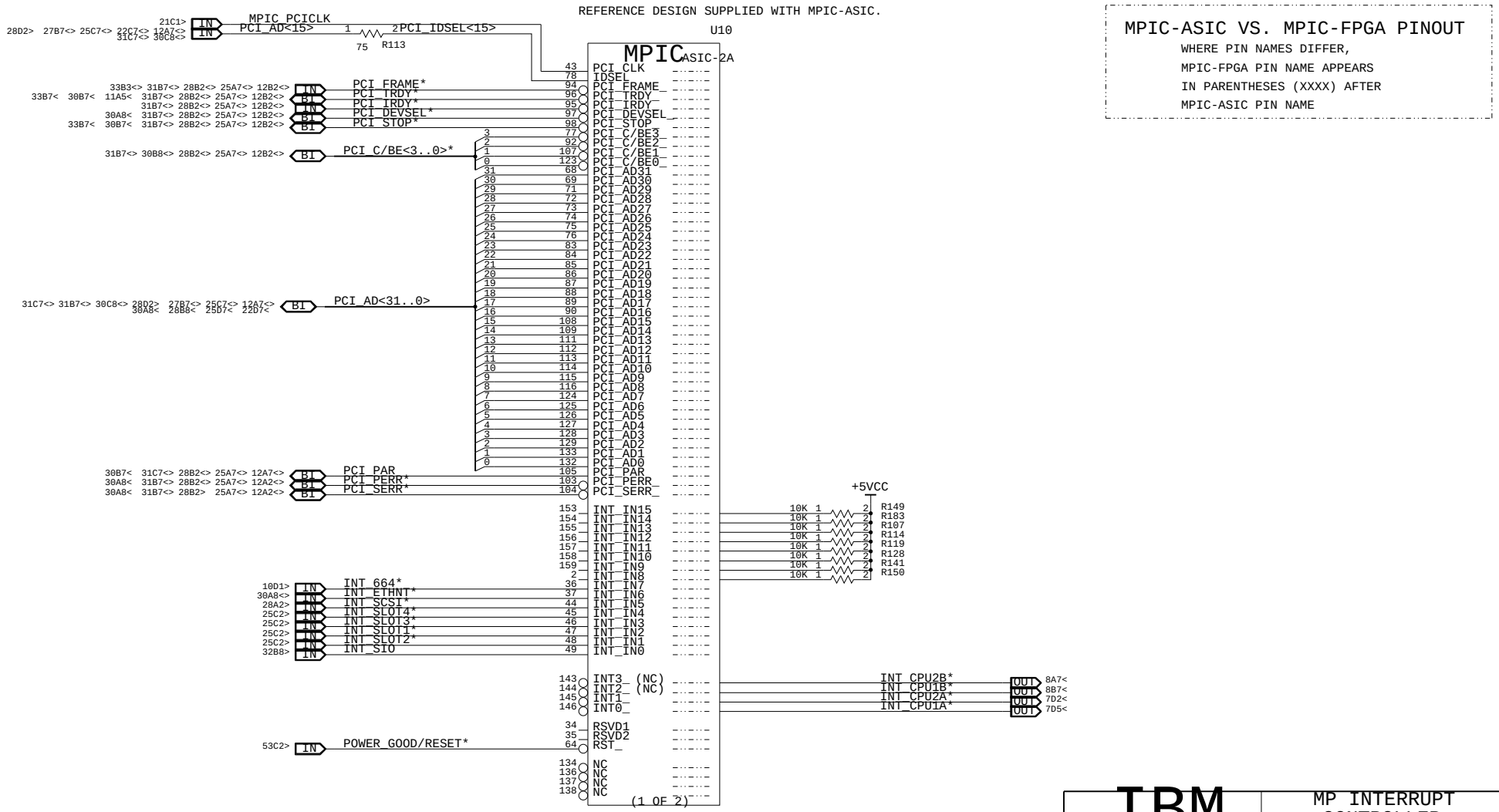

IBM	MP INTERRUPT CONTROLLER		
DATE: 15 DEC 1995	SIZE B	REVISION	DRWNG PART NUMBER MPRZP1SCU-03
POWERPC 604 SMP REFERENCE DESIGN			SHEET 22 OF 64

MOTHERBOARD

MPCI-ASIC VS. MPIC-FPGA PINOUT

WHERE PIN NAMES DIFFER,
MPIC-FPGA PIN NAME APPEARS
IN PARENTHESES (XXXX) AFTER
MPIC-ASIC PIN NAME

REFERENCE DESIGN SUPPLIED WITH MPIC-ASIC.

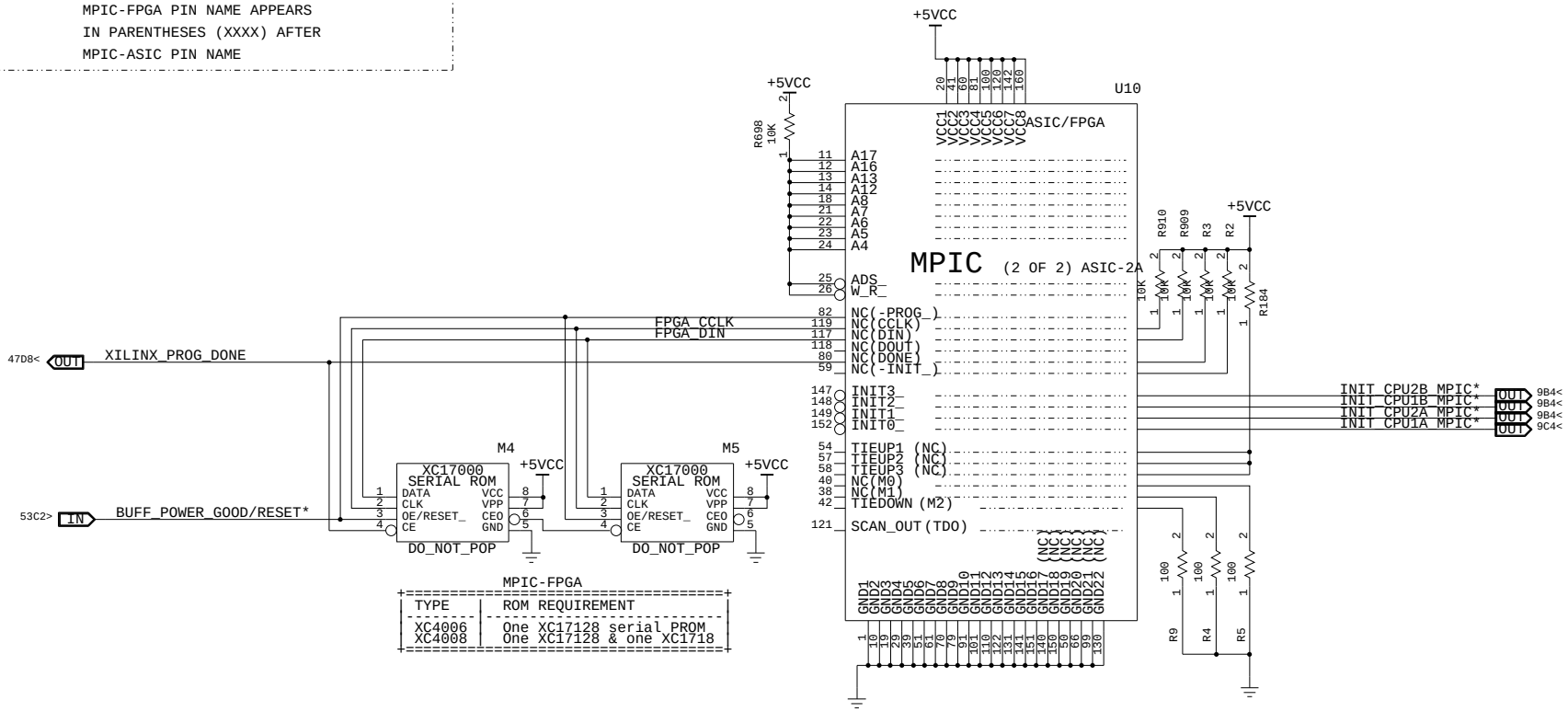

MPIC-FPGA

TYPE	ROM REQUIREMENT
XC4006	One XC17128 serial PROM
XC4008	One XC17128 & one XC1718

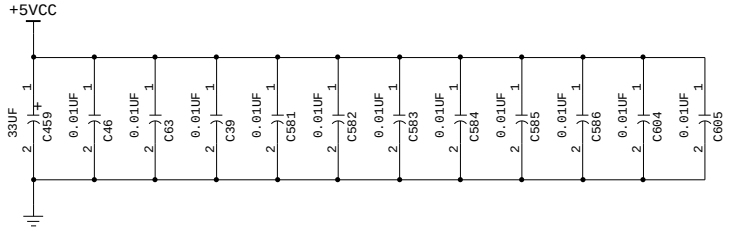

IBM	MP INTERRUPT CONTROLLER		
DATE: 15 DEC 1995	SIZE B	REVISION	DRWNG PART NUMBER MPRZP1SCU-03
POWERPC 604 SMP REFERENCE DESIGN			SHEET 23 OF 64

MOTHERBOARD

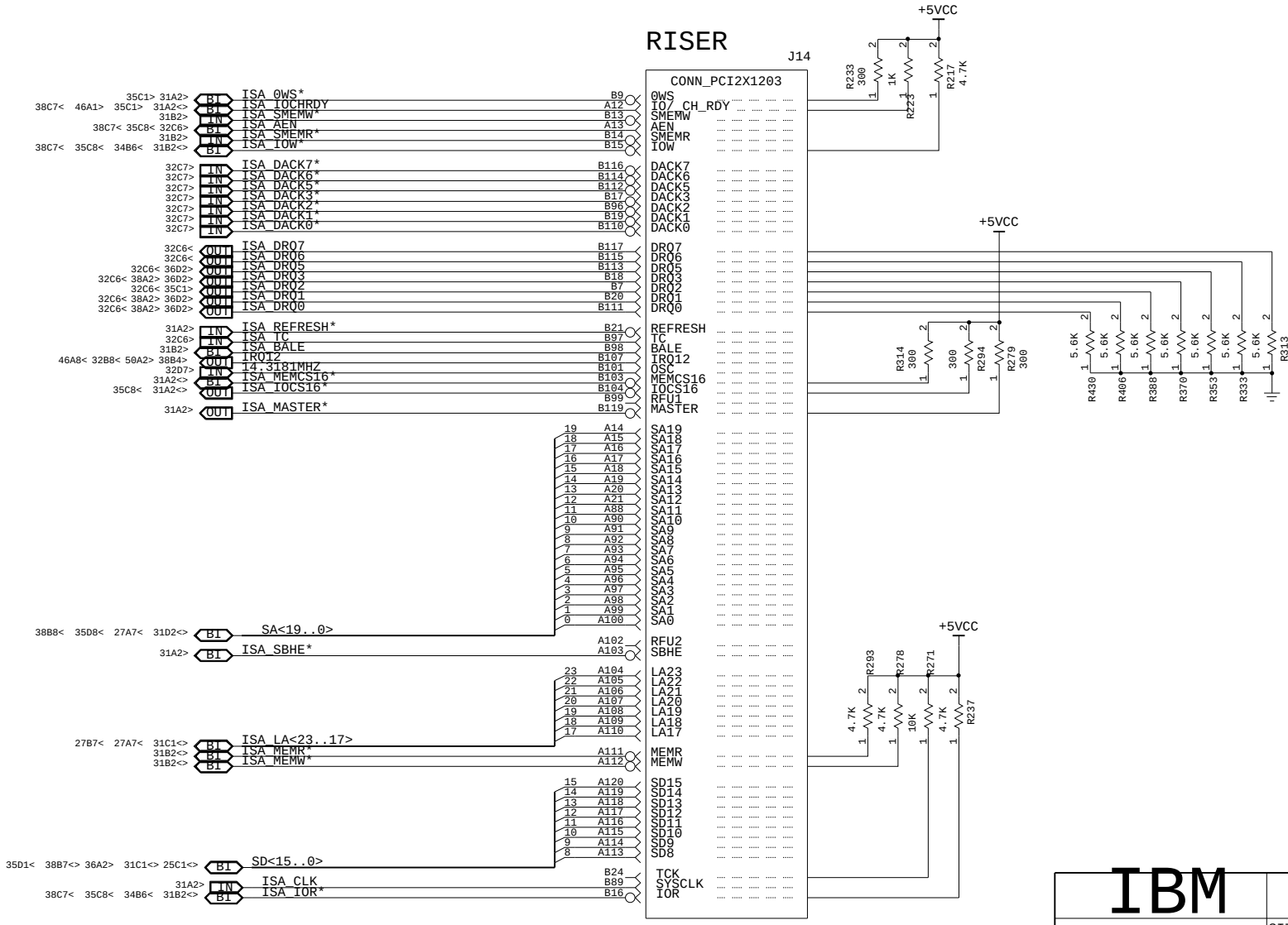

IBM	PCI+ISA RISER (2X120) ISA SECTION		
DATE: 15 DEC 1995	SIZE B	REVISION	DRWNG PART NUMBER MPRZP1SCU-03
POWERPC 604 SMP REFERENCE DESIGN	SHEET 24 OF 64		

MOTHERBOARD

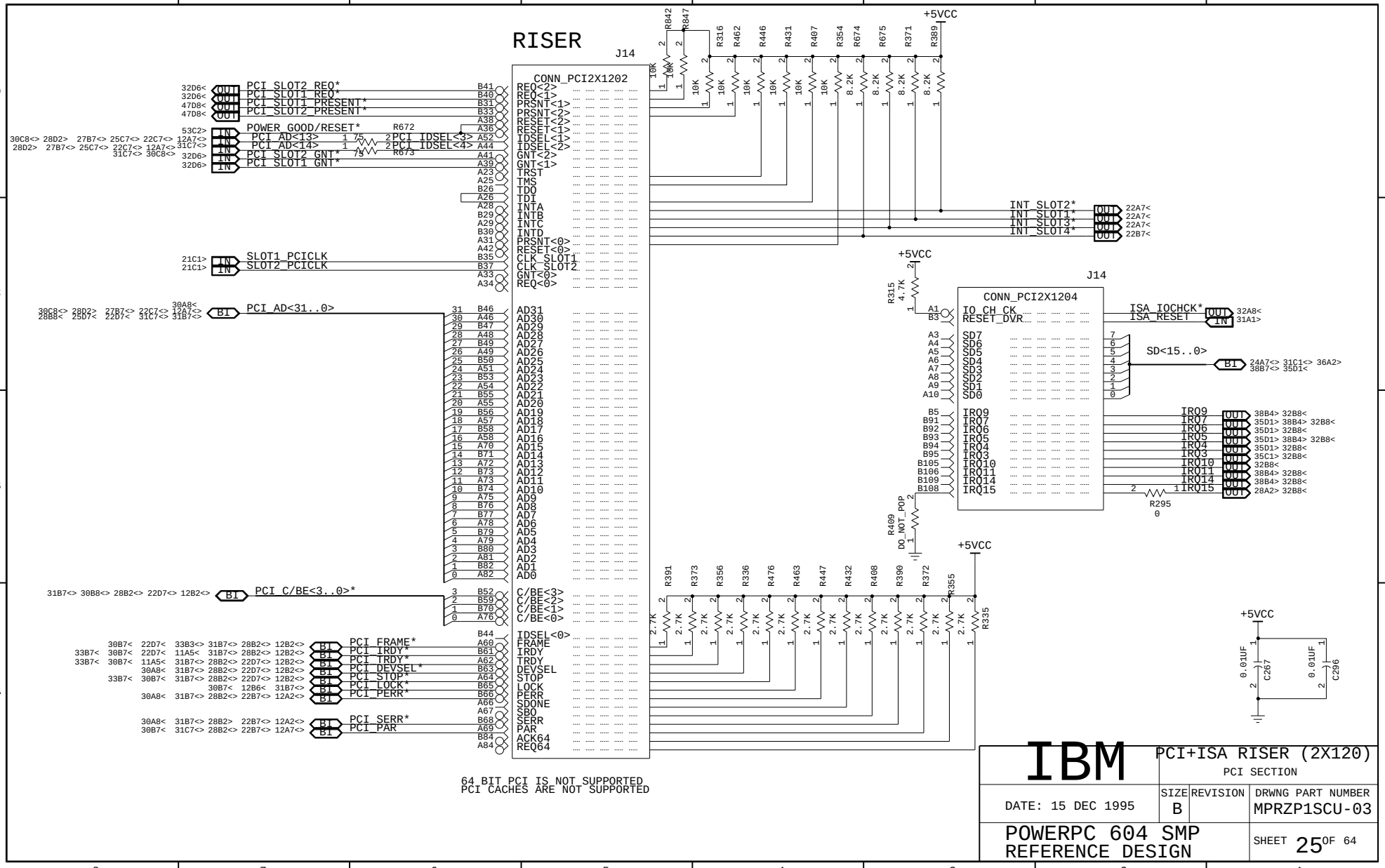
RISER
J14
CONN_PCI2X1202
PCI_SLOT2_REQ*
PCI_SLOT1_REQ*
PCI_SLOT1_PRESENT*
PCI_SLOT2_PRESENT*
POWER_GOOD/RESET*
PCI_AD<13>
PCI_AD<14>
PCI_SLOT2_GNT*
PCI_SLOT1_GNT*
SLOT1_PCICLK
SLOT2_PCICLK
PCI_AD<31..0>
PCI_C/BE<3..0>*
PCI_FRAME*
PCI_IRDY*
PCI_TRDY*
PCI_DEVSEL*
PCI_STOP*
PCI_LOCK*
PCI_PERR*
PCI_SERR*
PCI_PAR
INT_SLOT2*
INT_SLOT1*
INT_SLOT3*
INT_SLOT4*
+5VCC
CONN_PCI2X1204
ISA_IOCHCK*
ISA_RESET
SD<15..0>
64 BIT PCI IS NOT SUPPORTED
PCI CACHES ARE NOT SUPPORTED
IBM
PCI+ISA RISER (2X120)
PCI SECTION
DATE: 15 DEC 1995
SIZE B
REVISION
DRWNG PART NUMBER MPRZP1SCU-03
POWERPC 604 SMP
REFERENCE DESIGN
SHEET 25 OF 64
MOTHERBOARD

RISER

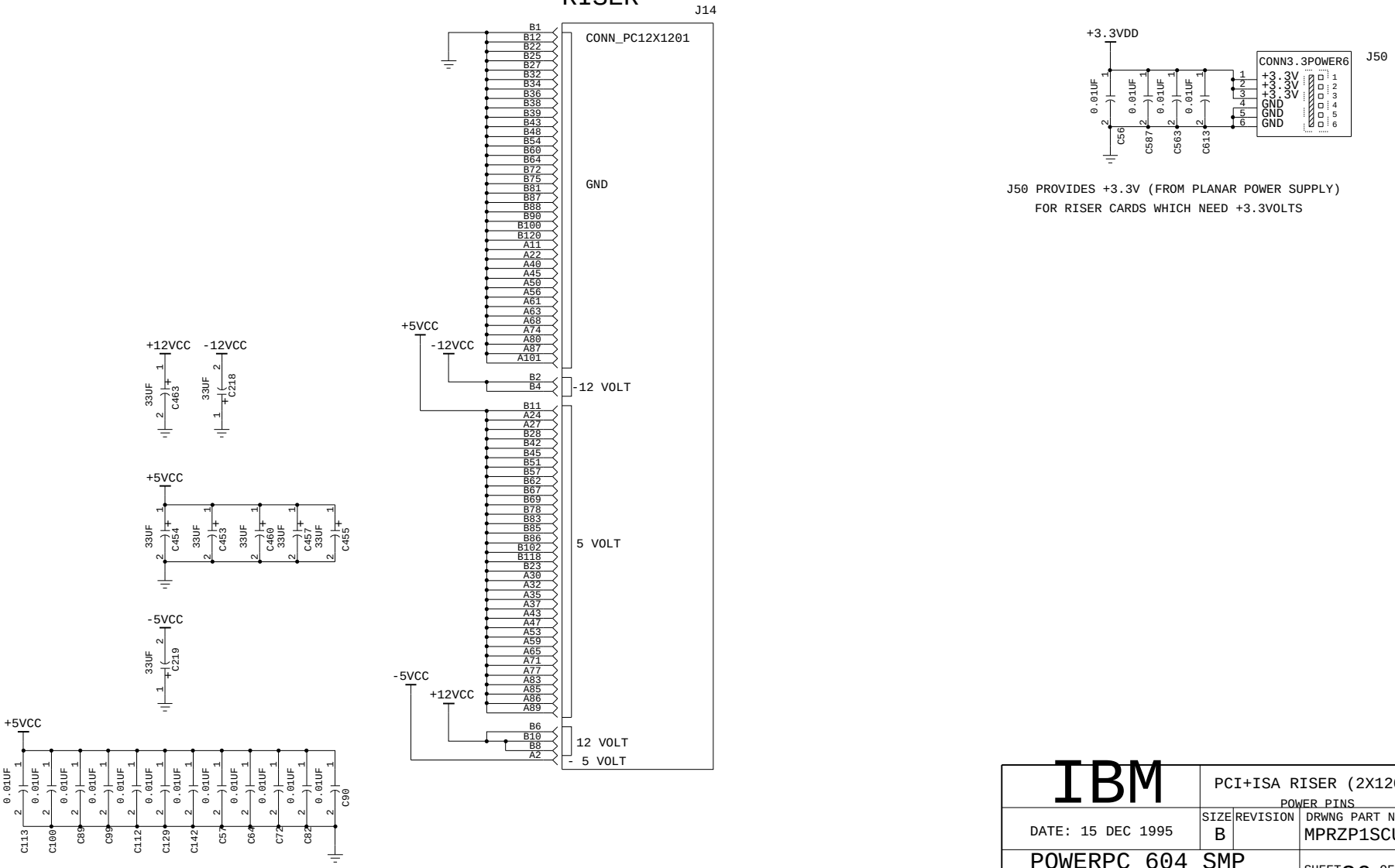

J50 PROVIDES +3.3V (FROM PLANAR POWER SUPPLY)
FOR RISER CARDS WHICH NEED +3.3VOLTS

IBM	PCI+ISA RISER (2X120) POWER PINS		
DATE: 15 DEC 1995	SIZE B	REVISION	DRWNG PART NUMBER MPRZP1SCU-03
POWERPC 604 SMP REFERENCE DESIGN	SHEET 26 OF 64		

MOTHERBOARD

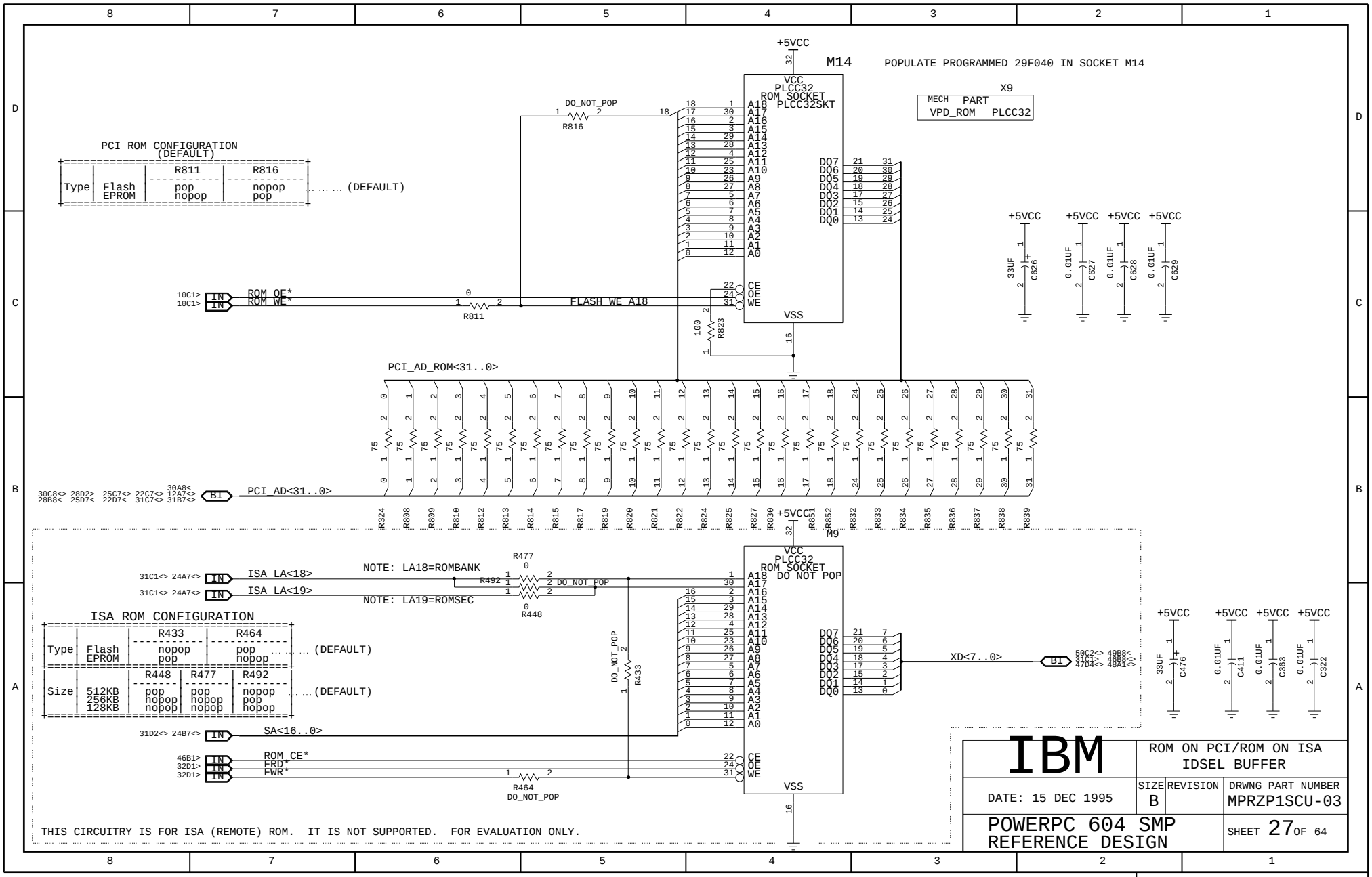
M14
POPULATE PROGRAMMED 29F040 IN SOCKET M14
VCC PLCC32 ROM SOCKET PLCC32SKT
X9
MECH PART
VPD_ROM PLCC32
PCI ROM CONFIGURATION (DEFAULT)
Type Flash EPROM
R811 pop nopop
R816 nopop pop
(DEFAULT)
DO_NOT_POP
R816
ROM OE*
ROM WE*
FLASH WE A18
R811
R823
PCI_AD_ROM<31..0>
PCI_AD<31..0>
M9
VCC PLCC32 ROM SOCKET DO_NOT_POP
ISA_LA<18>
ISA_LA<19>
NOTE: LA18=ROMBANK
NOTE: LA19=ROMSEC
R477
R492
R448
ISA ROM CONFIGURATION
Type Flash EPROM
R433 nopop pop
R464 pop nopop
(DEFAULT)
Size 512KB 256KB 128KB
R448 pop nopop nopop
R477 pop nopop nopop
R492 nopop pop nopop
(DEFAULT)
R433
SA<16..0>
ROM_CE*
FRD*
FWR*
R464
DO_NOT_POP
XD<7..0>
THIS CIRCUITRY IS FOR ISA (REMOTE) ROM. IT IS NOT SUPPORTED. FOR EVALUATION ONLY.
IBM
ROM ON PCI/ROM ON ISA
IDSEL BUFFER
DATE: 15 DEC 1995
SIZE B
REVISION
DRWNG PART NUMBER
MPRZP1SCU-03
POWERPC 604 SMP
REFERENCE DESIGN
SHEET 27 OF 64
MOTHERBOARD

SCSI

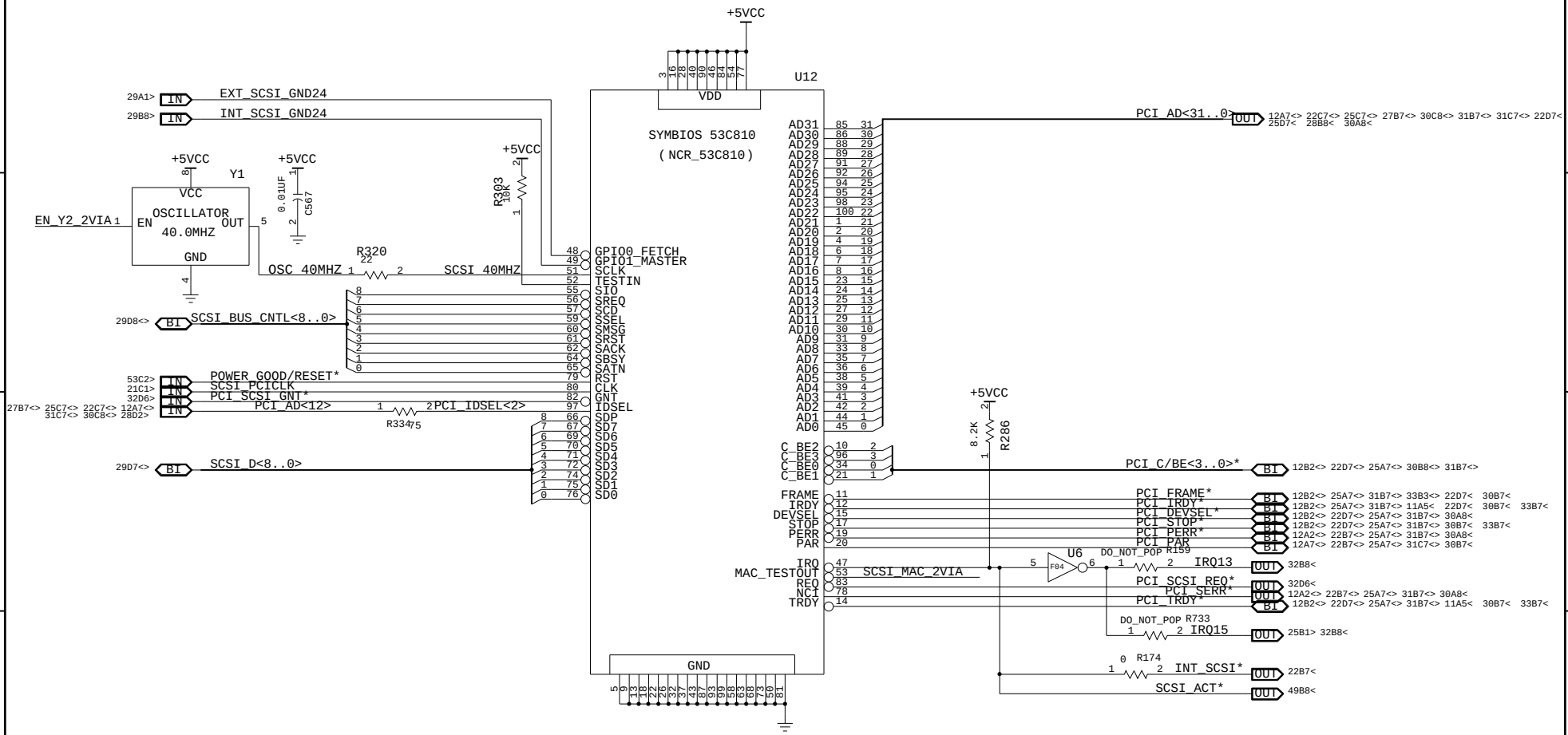

* TRADEMARK OF NATIONAL CASH REGISTER CORP.

IBM	SCSI CNTLR		
DATE: 15 DEC 1995	SIZE B	REVISION	DRWNG PART NUMBER MPRZP1SCU-03
POWERPC 604 SMP REFERENCE DESIGN			SHEET 28 OF 64

MOTHERBOARD

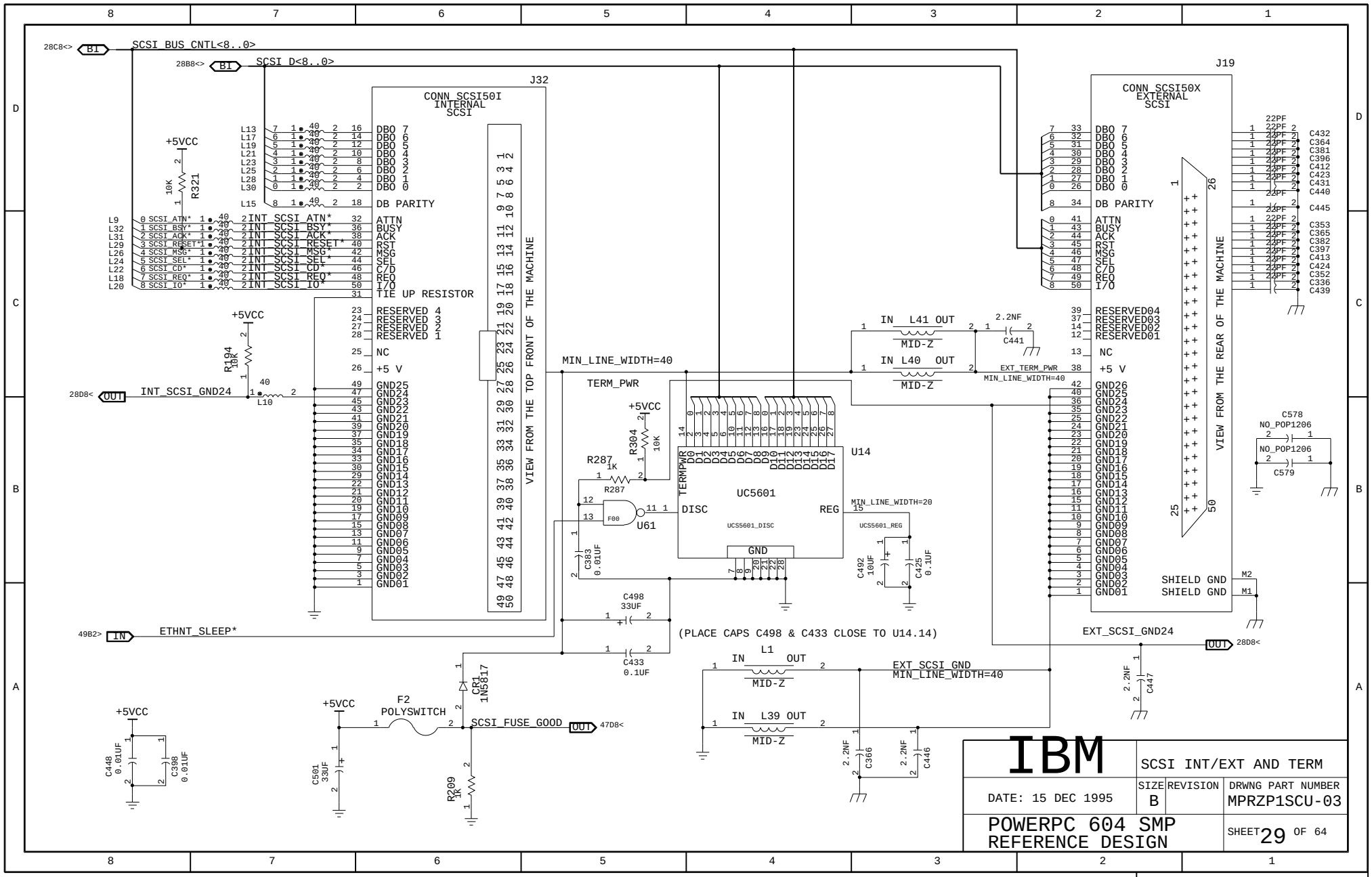
SCSI_BUS_CNTL<8..0>
SCSI_D<8..0>
J32
CONN_SCSI50I
INTERNAL
SCSI
VIEW FROM THE TOP FRONT OF THE MACHINE
J19
CONN_SCSI50X
EXTERNAL
SCSI
VIEW FROM THE REAR OF THE MACHINE
+5VCC
R321
10K
R194
10K
INT_SCSI_GND24
L10
MIN_LINE_WIDTH=40
TERM_PWR
R304
10K
R287
1K
U61
F00
U14
UC5601
DISC
REG
GND
UCS5601_DISC
UCS5601_REG
MIN_LINE_WIDTH=20
C383
0.01UF
C498
33UF
C433
0.1UF
C492
10UF
C425
0.1UF
(PLACE CAPS C498 & C433 CLOSE TO U14.14)
ETHNT_SLEEP*
L41
L40
L39
L1
MID-Z
2.2NF
C441
EXT_TERM_PWR
EXT_SCSI_GND
EXT_SCSI_GND24
C447
C366
C446
C578
NO_POP1206
C579
SHIELD GND
F2
POLYSWITCH
SCSI_FUSE_GOOD
CR1
1N5817
C448
0.01UF
C398
0.01UF
C501
33UF
R209
1K
IBM
SCSI INT/EXT AND TERM
DATE: 15 DEC 1995
SIZE B
REVISION
DRWNG PART NUMBER
MPRZP1SCU-03
POWERPC 604 SMP
REFERENCE DESIGN
SHEET 29 OF 64
MOTHERBOARD

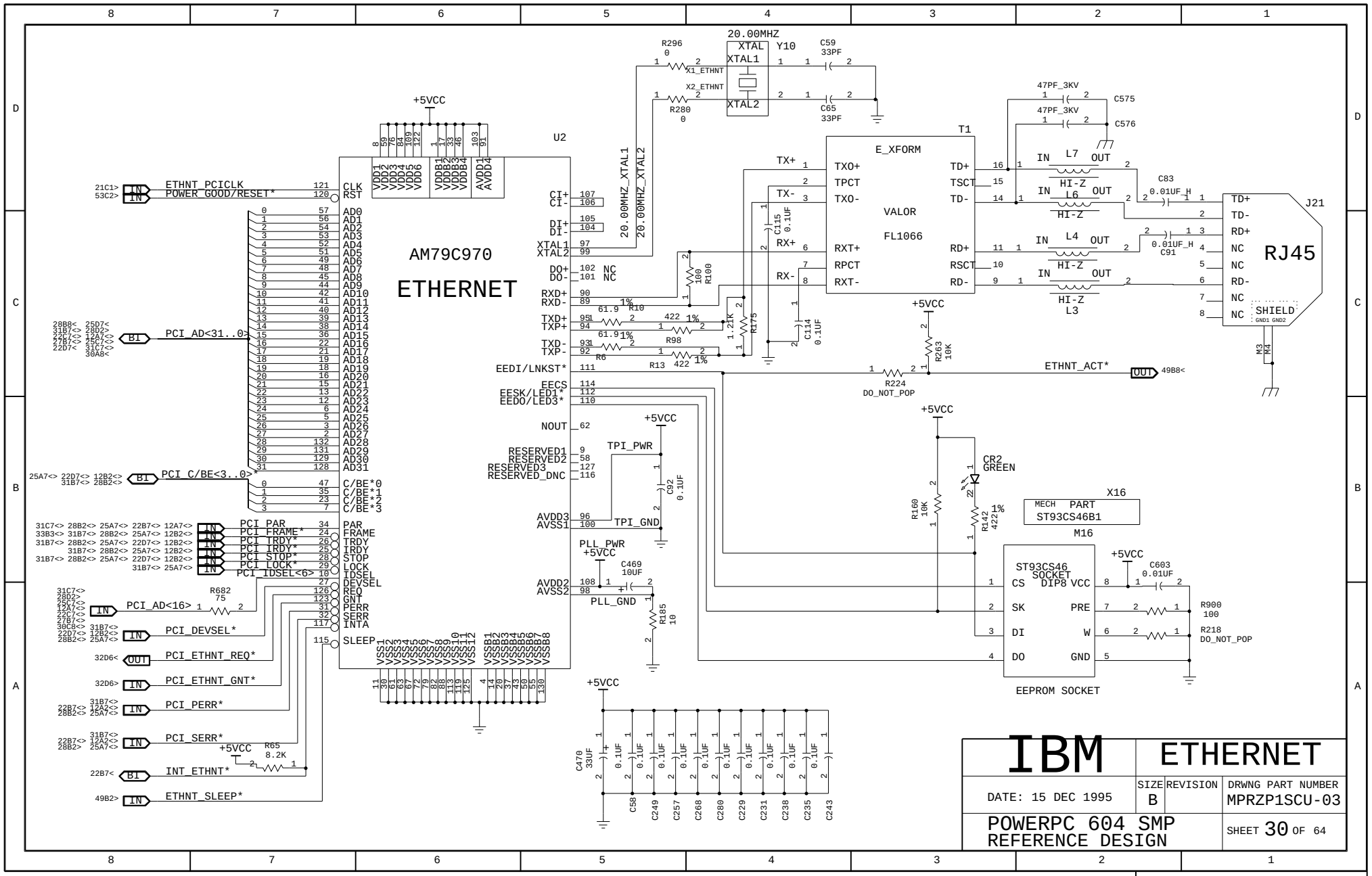

IBM	ETHERNET		
DATE: 15 DEC 1995	SIZE B	REVISION	DRWNG PART NUMBER MPRZP1SCU-03
POWERPC 604 SMP REFERENCE DESIGN			SHEET 30 OF 64

MOTHERBOARD

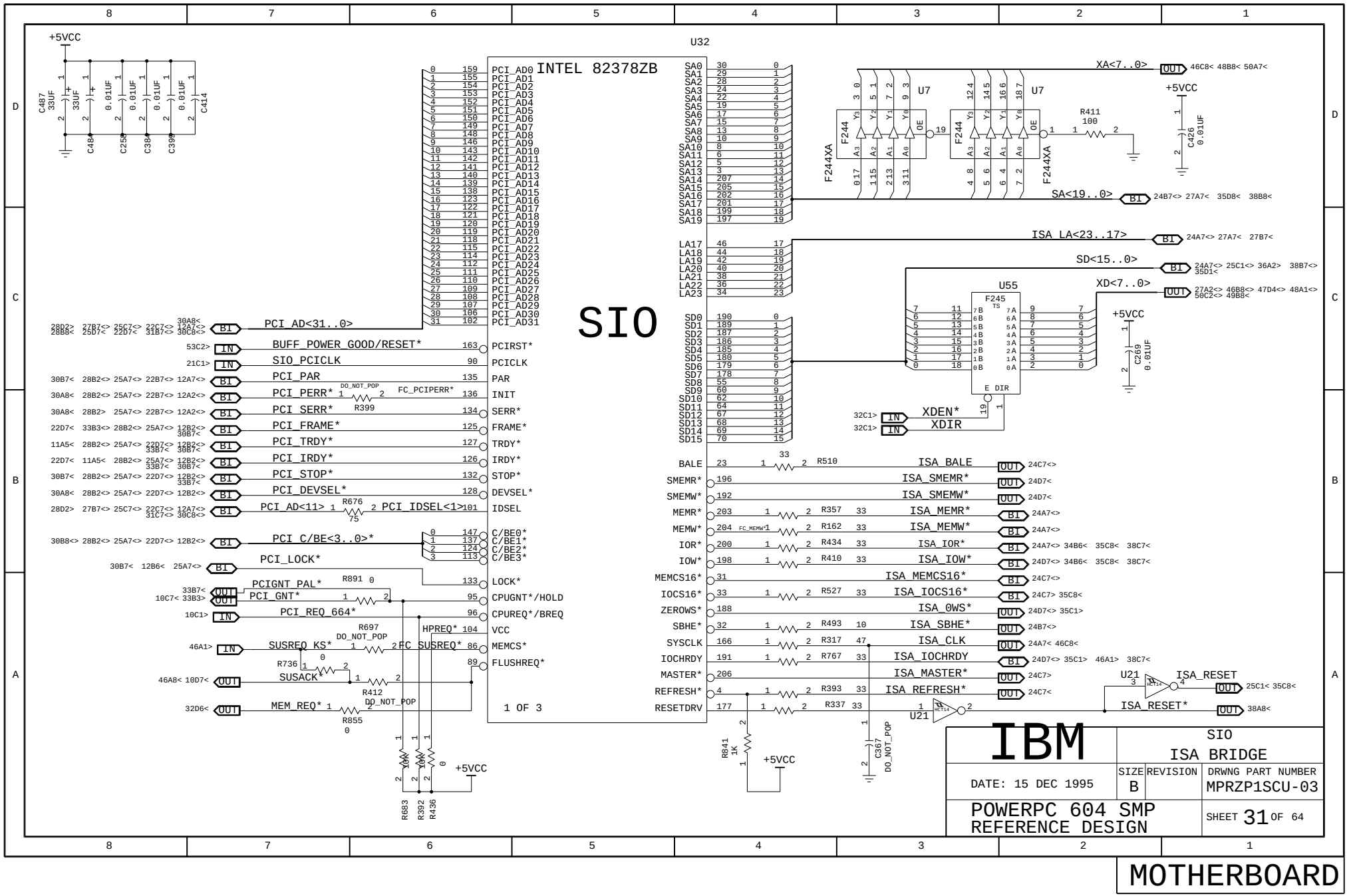
SIO
INTEL 82378ZB
U32
1 OF 3
PCI_AD<31..0>
BUFF_POWER_GOOD/RESET*
SIO_PCICLK
PCI_PAR
PCI_PERR*
PCI_SERR*
PCI_FRAME*
PCI_TRDY*
PCI_IRDY*
PCI_STOP*
PCI_DEVSEL*
PCI_AD<11>
PCI_IDSEL<1>
PCI C/BE<3..0>*
PCI_LOCK*
PCIGNT_PAL*
PCI_GNT*
PCI_REQ_664*
SUSREQ_KS*
SUSACK*
MEM_REQ*
HPREQ*
FC_SUSREQ*
FC_PCIPERR*
XA<7..0>
SA<19..0>
ISA LA<23..17>
SD<15..0>
XD<7..0>
XDEN*
XDIR
ISA_BALE
ISA_SMEMR*
ISA_SMEMW*
ISA_MEMR*
ISA_MEMW*
ISA_IOR*
ISA_IOW*
ISA_MEMCS16*
ISA_IOCS16*
ISA_0WS*
ISA_SBHE*
ISA_CLK
ISA_IOCHRDY
ISA_MASTER*
ISA_REFRESH*
ISA_RESET
ISA_RESET*
U7
F244
F244XA
U55
F245
U21
+5VCC
IBM
SIO
ISA BRIDGE
DATE: 15 DEC 1995
SIZE B
REVISION
DRWNG PART NUMBER
MPRZP1SCU-03
POWERPC 604 SMP
REFERENCE DESIGN
SHEET 31 OF 64
MOTHERBOARD

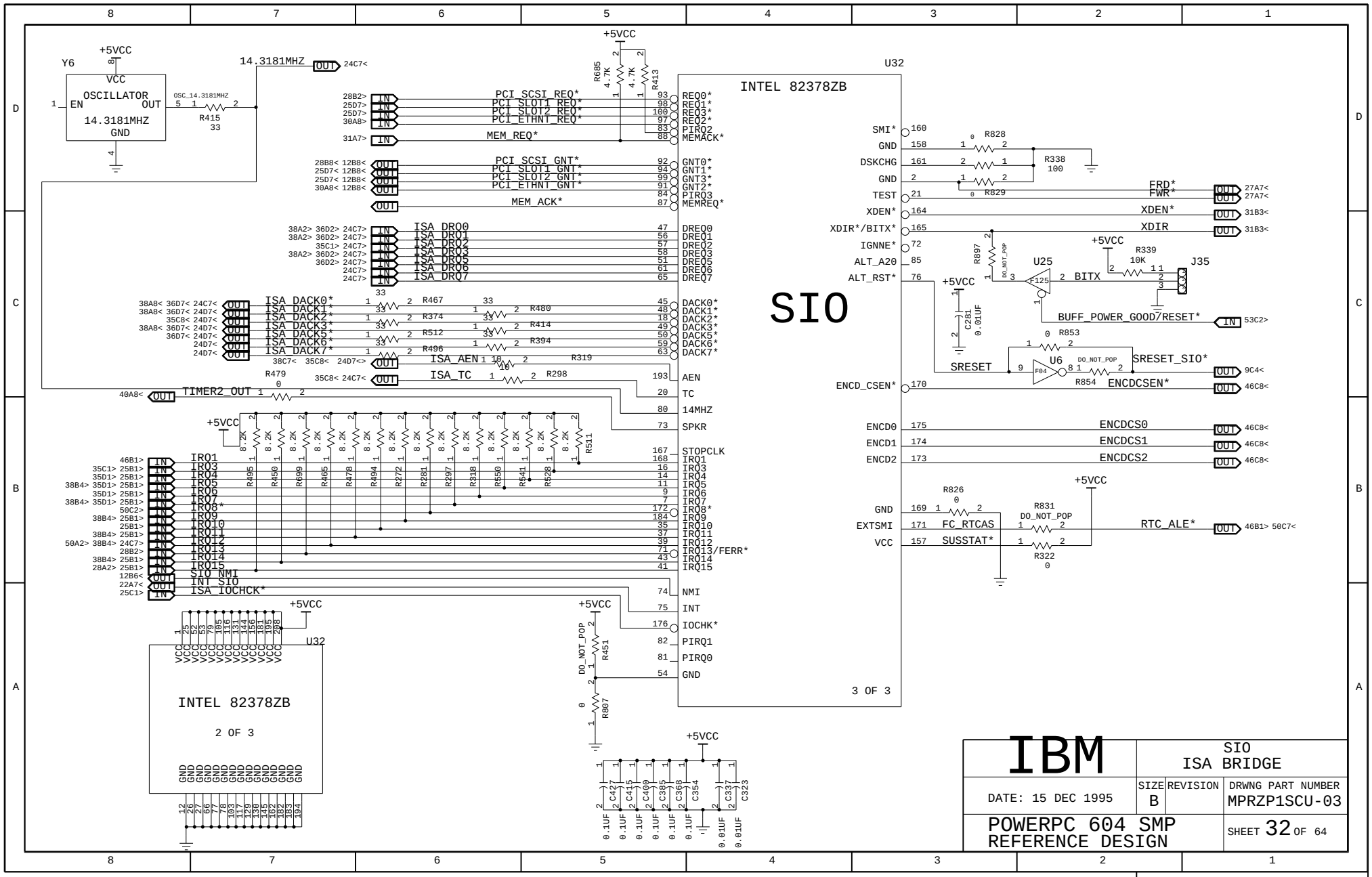

IBM	SIO ISA BRIDGE		
DATE: 15 DEC 1995	SIZE B	REVISION	DRWNG PART NUMBER MPRZP1SCU-03
POWERPC 604 SMP REFERENCE DESIGN	SHEET 32 OF 64		

MOTHERBOARD

COMPONENTS ON THIS THIS ARE NOT REQUIRED IF 82664 CONTROLLER VERSION 1.2 (P/N 20H2842) OR LATER IS USED

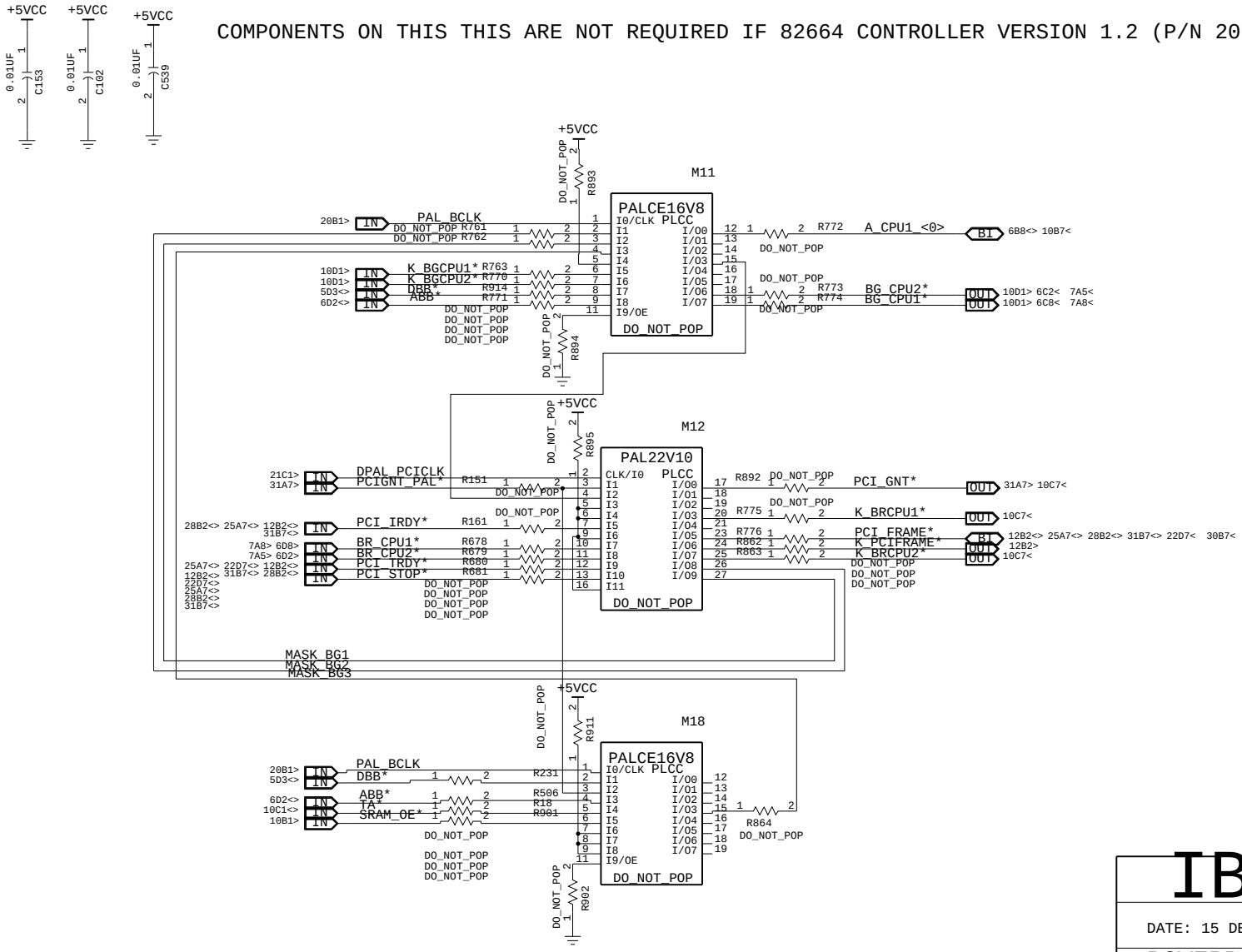

IBM	SPARE PALS		
DATE: 15 DEC 1995	SIZE B	REVISION	DRWNG PART NUMBER MPRZP1SCU-03
POWERPC 604 SMP REFERENCE DESIGN	SHEET 33 OF 64		

MOTHERBOARD

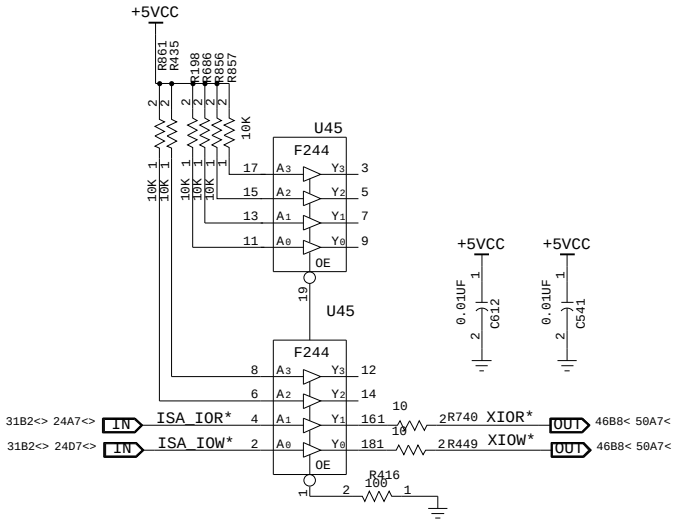

IBM

XIORW BUFFER

DATE: 15 DEC 1995

SIZE	REVISION	DRWNG PART NUMBER
B		MPRZP1SCU-03

POWERPC 604 SMP
REFERENCE DESIGN

SHEET 34 OF 64

MOTHERBOARD

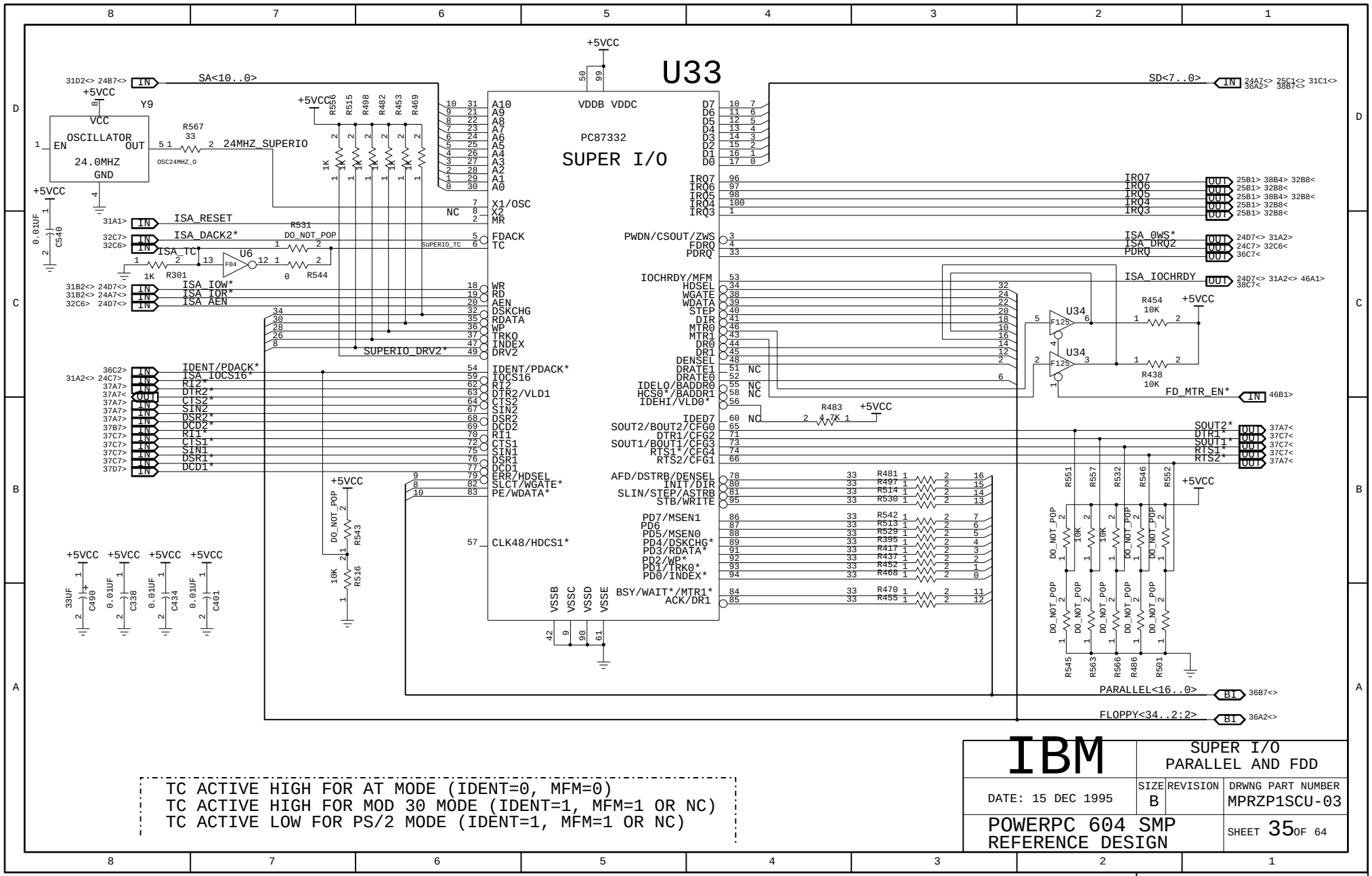
U33
PC87332
SUPER I/O
VDDB VDDC
+5VCC
SA<10..0>
SD<7..0>
Y9
OSCILLATOR
24.0MHZ
24MHZ_SUPERIO
R567
33
ISA_RESET
ISA_DACK2*
ISA_TC
U6
R301
R544
R531
DO_NOT_POP
ISA_IOW*
ISA_IOR*
ISA_AEN
SUPERIO_DRV2*
SUPERIO_TC
IDENT/PDACK*
ISA_IOCS16*
RI2*
DTR2*
CTS2*
SIN2
DSR2*
DCD2*
RI1*
CTS1*
SIN1
DSR1*
DCD1*
IRQ7
IRQ6
IRQ5
IRQ4
IRQ3
ISA_0WS*
ISA_DRQ2
PDRQ
ISA_IOCHRDY
FD_MTR_EN*
SOUT2*
DTR1*
SOUT1*
RTS1*
RTS2*
PARALLEL<16..0>
FLOPPY<34..2:2>
TC ACTIVE HIGH FOR AT MODE (IDENT=0, MFM=0)
TC ACTIVE HIGH FOR MOD 30 MODE (IDENT=1, MFM=1 OR NC)
TC ACTIVE LOW FOR PS/2 MODE (IDENT=1, MFM=1 OR NC)
IBM
SUPER I/O
PARALLEL AND FDD
DATE: 15 DEC 1995
SIZE B
REVISION
DRWNG PART NUMBER
MPRZP1SCU-03
POWERPC 604 SMP
REFERENCE DESIGN
SHEET 35 OF 64
MOTHERBOARD

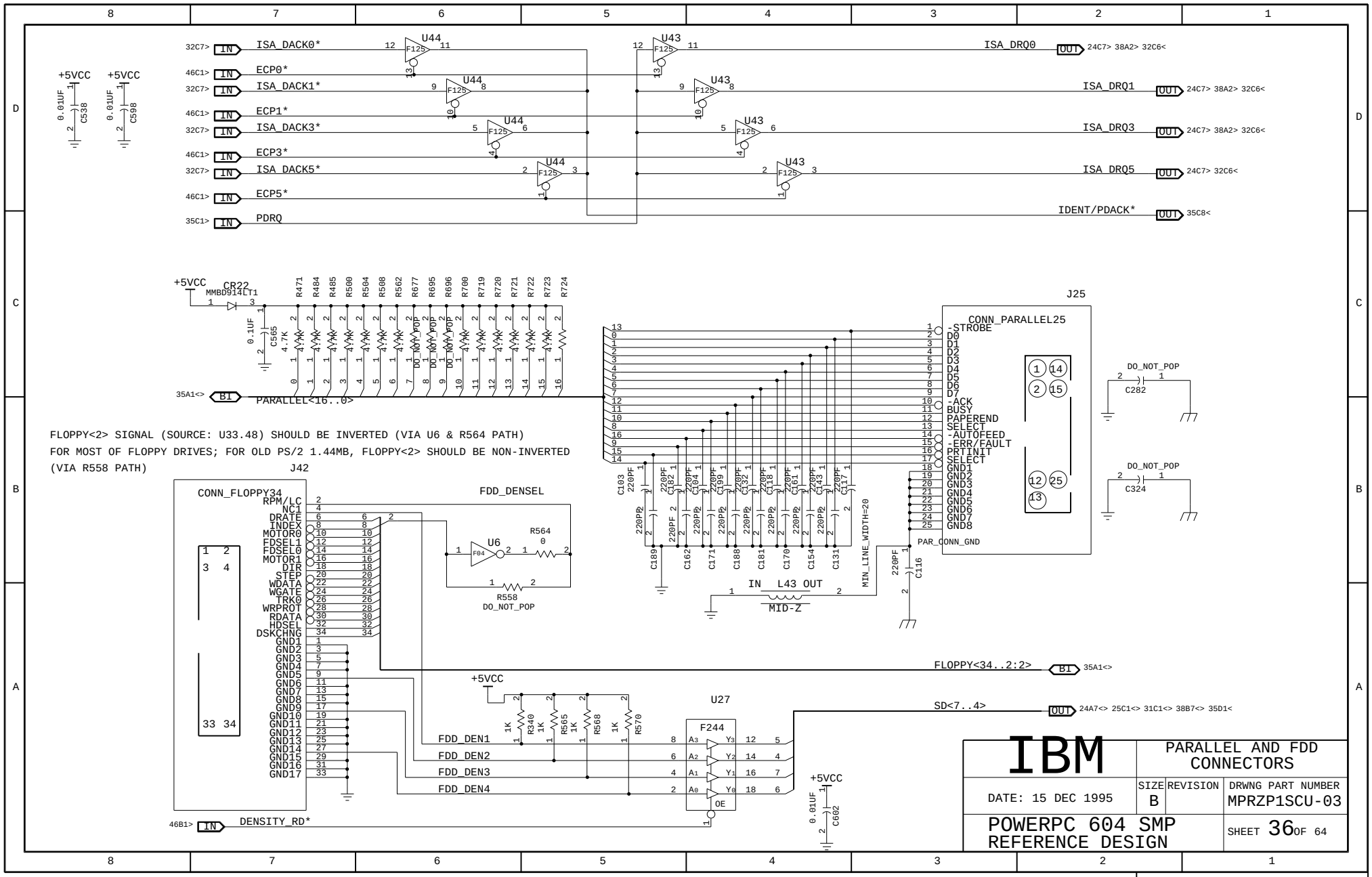

IBM

PARALLEL AND FDD CONNECTORS

DATE: 15 DEC 1995

SIZE B | REVISION | DRWNG PART NUMBER MPRZP1SCU-03

POWERPC 604 SMP REFERENCE DESIGN

SHEET 36 OF 64

MOTHERBOARD

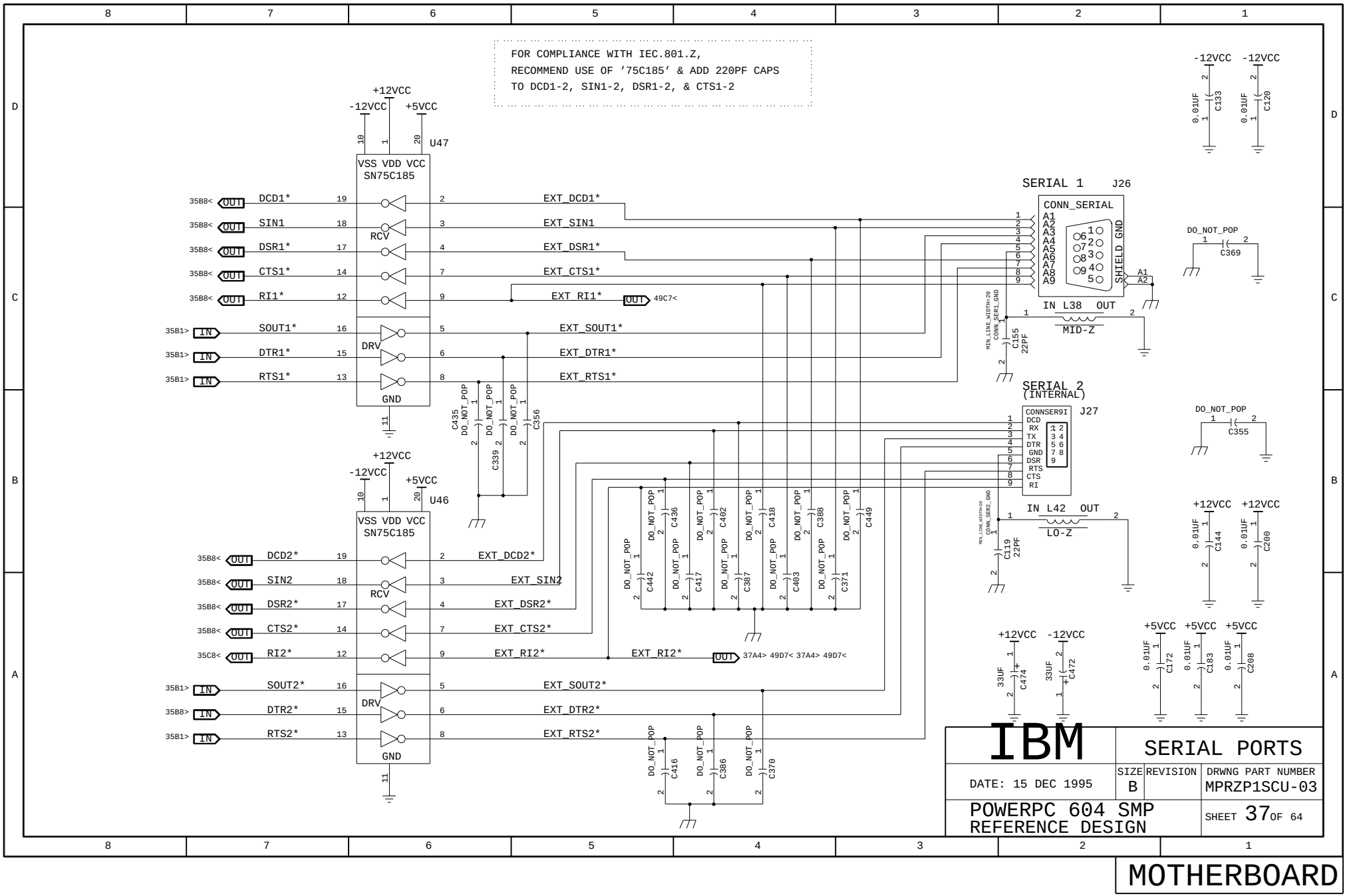

IBM

SERIAL PORTS

DATE: 15 DEC 1995

SIZE B | REVISION | DRWNG PART NUMBER MPRZP1SCU-03

POWERPC 604 SMP
REFERENCE DESIGN

SHEET 37 OF 64

MOTHERBOARD

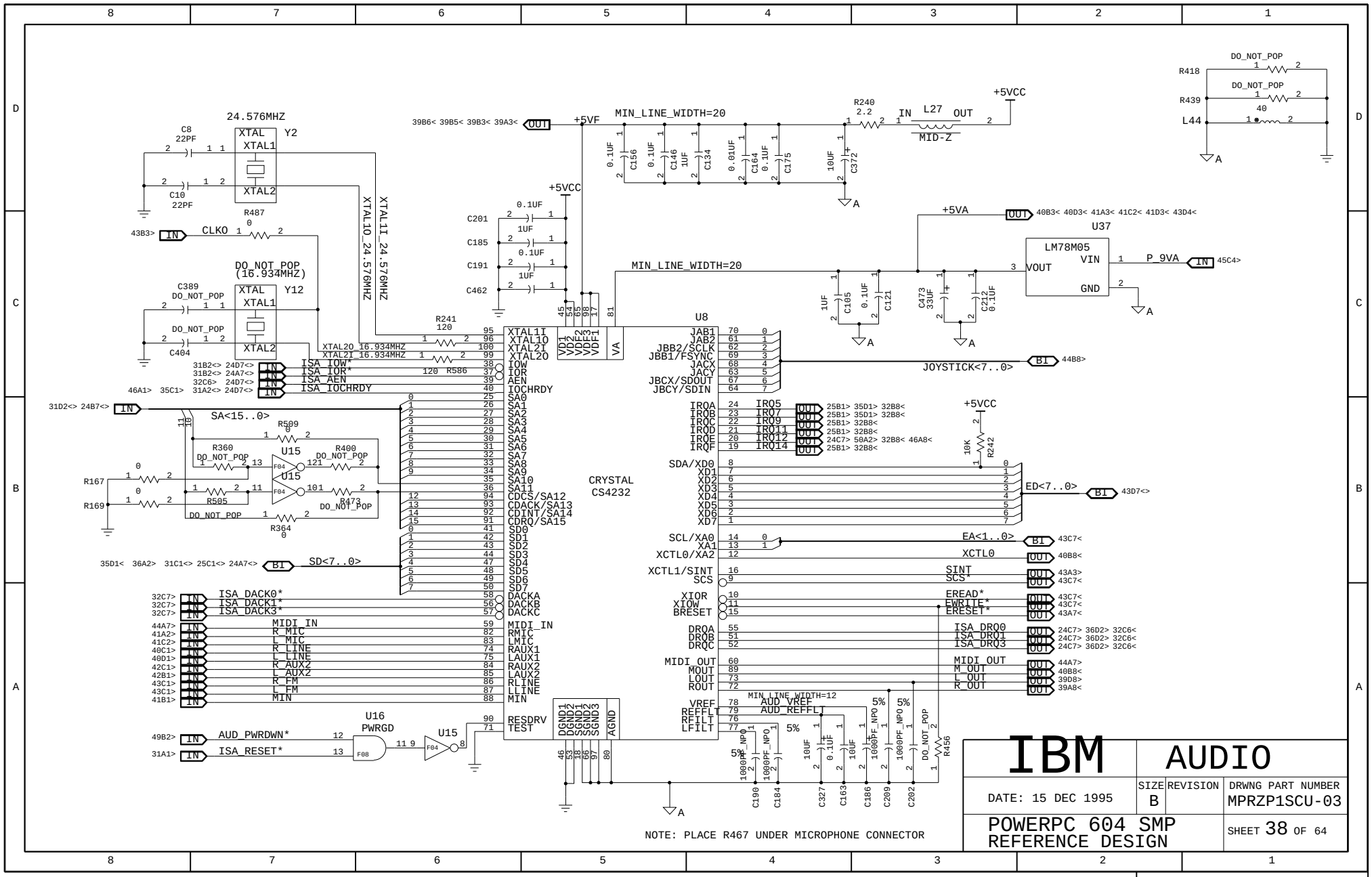

IBM

AUDIO

DATE: 15 DEC 1995	SIZE B	REVISION	DRWNG PART NUMBER MPRZP1SCU-03
POWERPC 604 SMP REFERENCE DESIGN			SHEET 38 OF 64

MOTHERBOARD

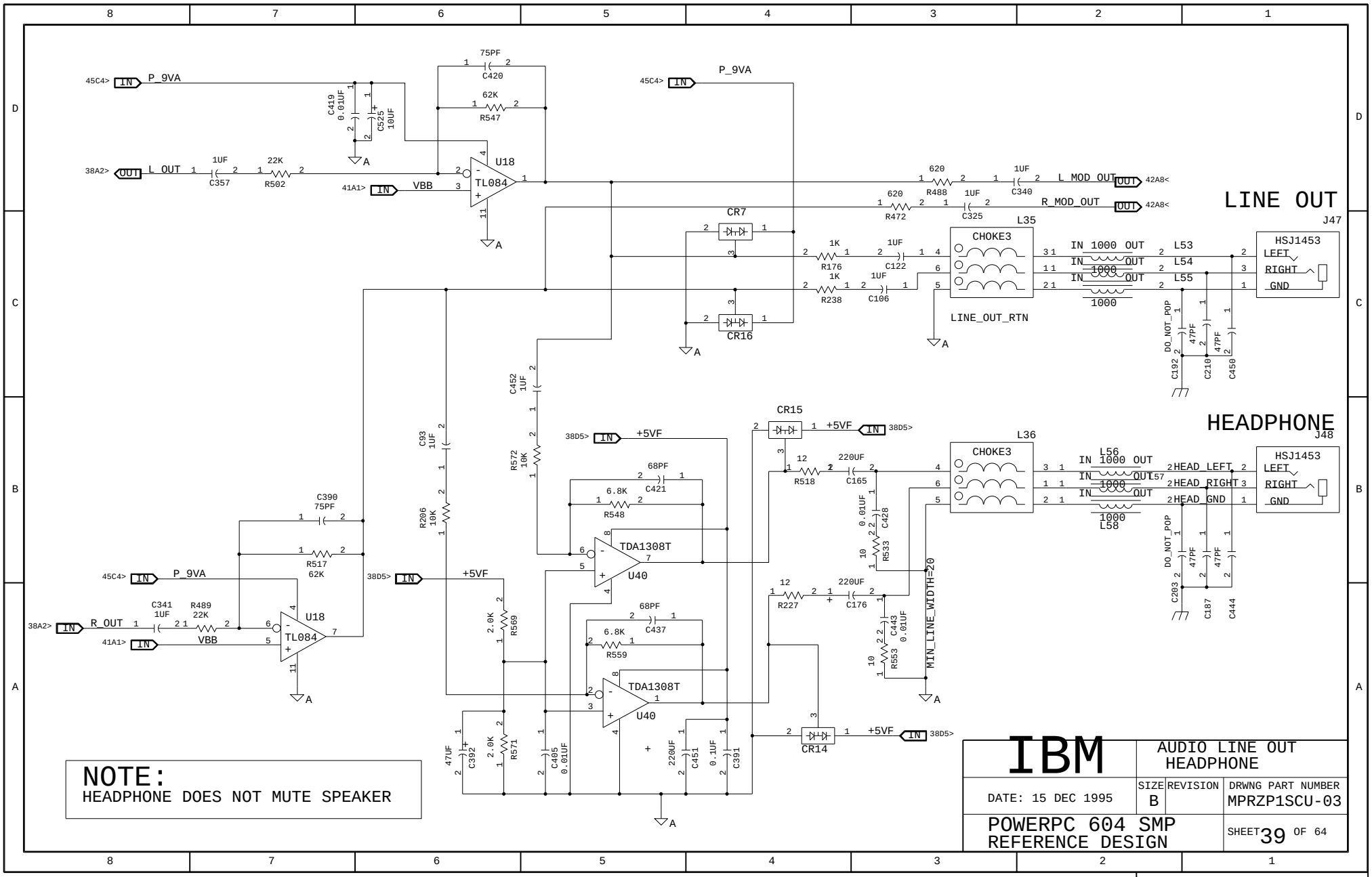
LINE OUT
HEADPHONE
P_9VA
L_OUT
R_OUT
VBB
U18
TL084
U40
TDA1308T
CHOKE3
L35
L36
J47
J48
HSJ1453
LEFT
RIGHT
GND
L_MOD_OUT
R_MOD_OUT
LINE_OUT_RTN
HEAD_LEFT
HEAD_RIGHT
HEAD_GND
MIN_LINE_WIDTH=20
DO_NOT_POP
+5VF
CR7
CR16
CR15
CR14
NOTE:
HEADPHONE DOES NOT MUTE SPEAKER
IBM
AUDIO LINE OUT
HEADPHONE
DATE: 15 DEC 1995
SIZE B
REVISION
DRWNG PART NUMBER
MPRZP1SCU-03
POWERPC 604 SMP
REFERENCE DESIGN
SHEET 39 OF 64
MOTHERBOARD

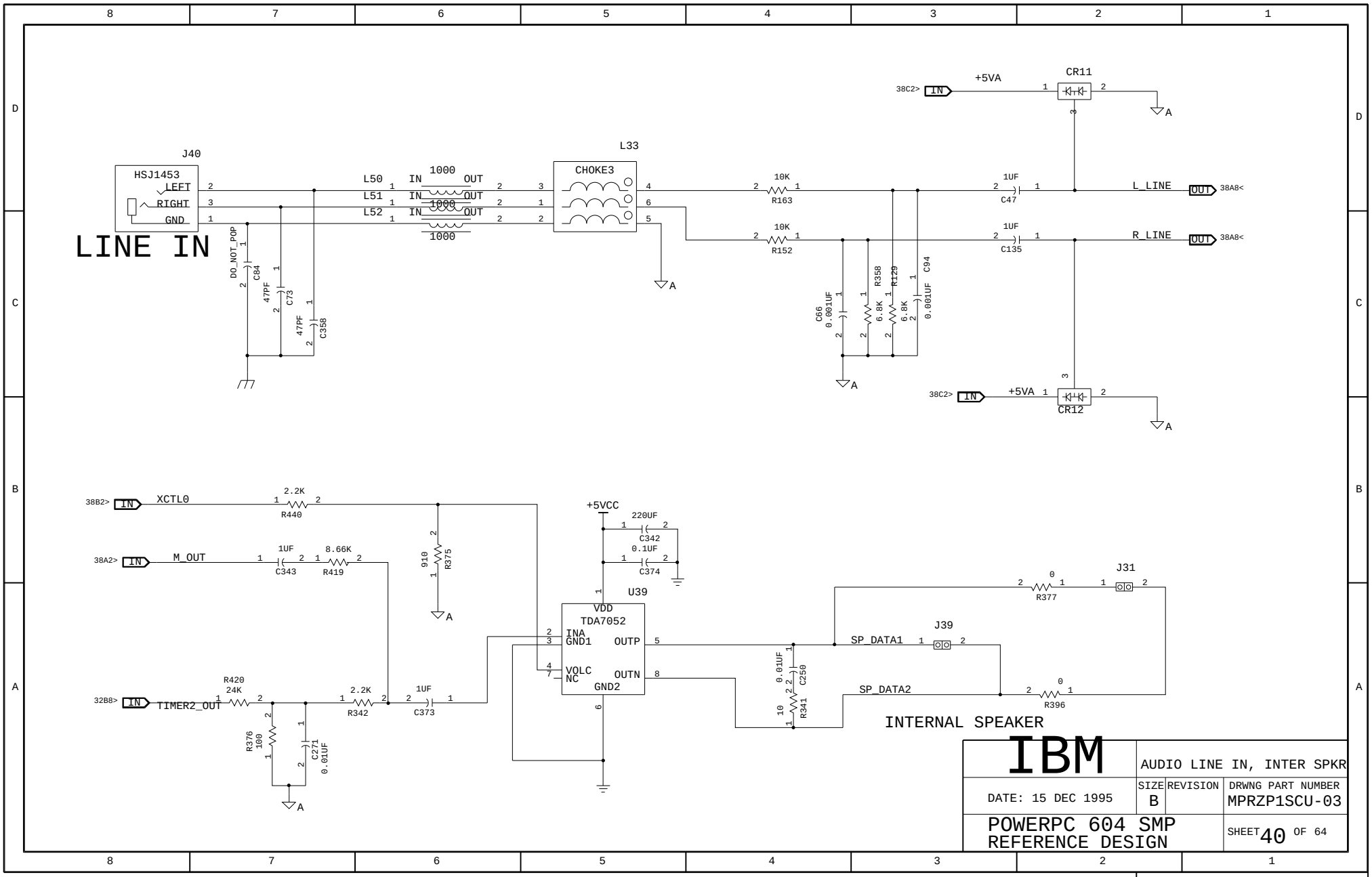

IBM

AUDIO LINE IN, INTER SPKR

DATE: 15 DEC 1995

SIZE B | REVISION | DRWNG PART NUMBER MPRZP1SCU-03

POWERPC 604 SMP
REFERENCE DESIGN

SHEET 40 OF 64

MOTHERBOARD

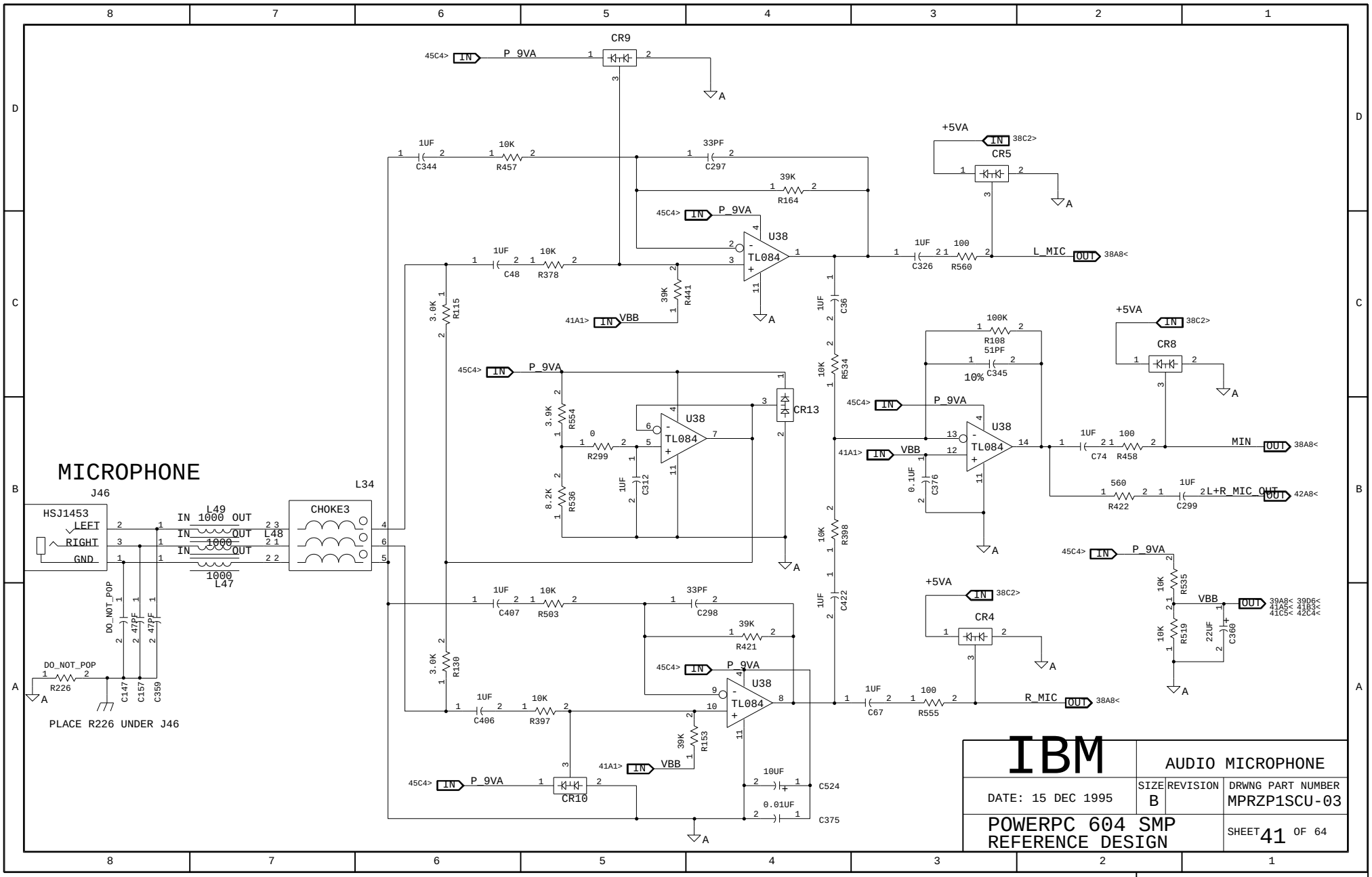

IBM	AUDIO MICROPHONE		
DATE: 15 DEC 1995	SIZE B	REVISION	DRWNG PART NUMBER MPRZP1SCU-03
POWERPC 604 SMP REFERENCE DESIGN	SHEET 41 OF 64		

MOTHERBOARD

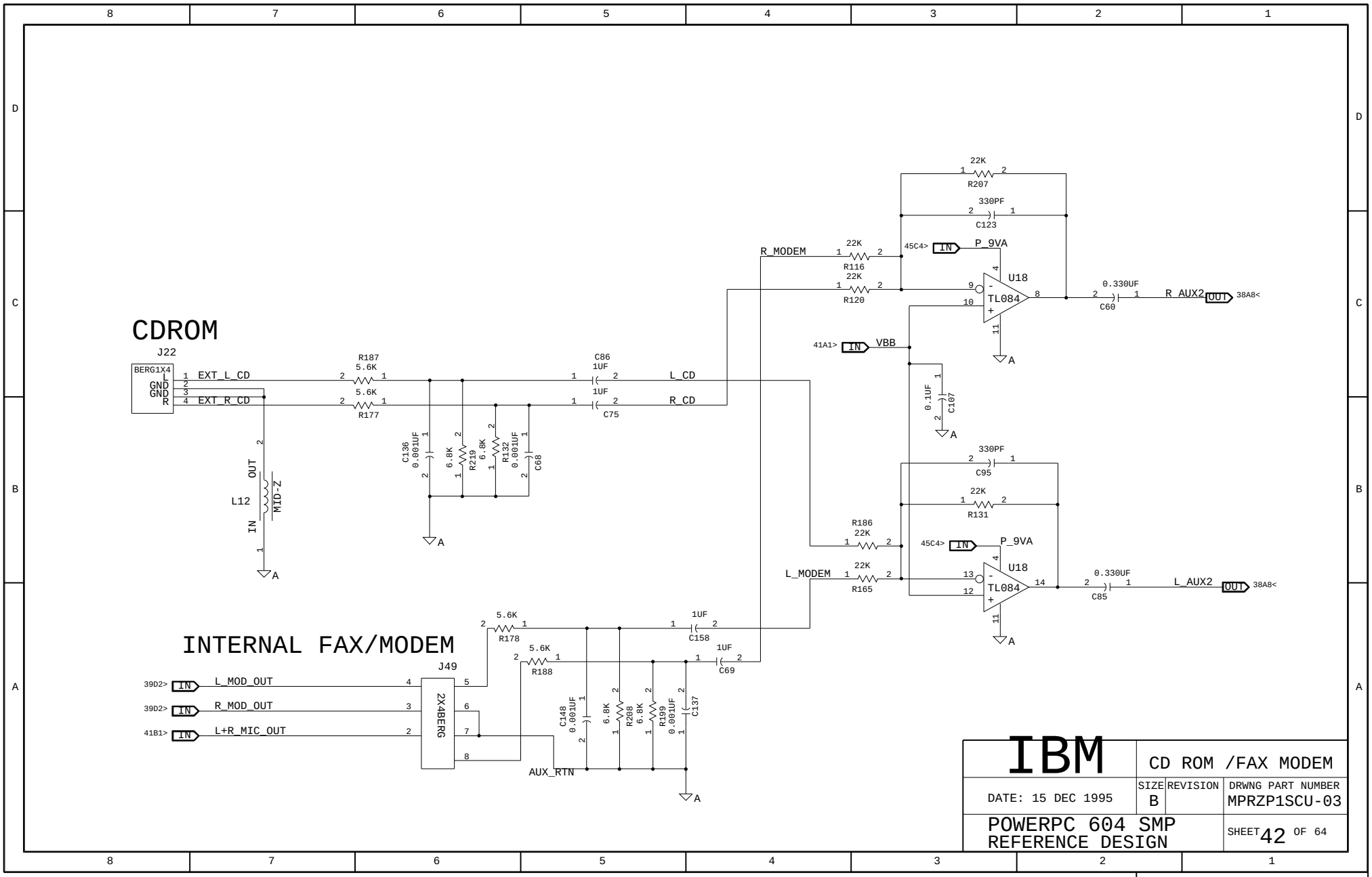
CDROM
J22
BERG1X4
L
GND
GND
R
EXT_L_CD
EXT_R_CD
R187 5.6K
R177 5.6K
C136 0.001UF
6.8K R219
6.8K R132
0.001UF C68
C86 1UF
C75 1UF
L_CD
R_CD
L12
OUT
IN
MID-Z
R_MODEM
L_MODEM
R116 22K
R120 22K
R207 22K
C123 330PF
45C4> IN P_9VA
U18
TL084
0.330UF C60
R_AUX2 OUT 38A8<
41A1> IN VBB
0.1UF C107
C95 330PF
R131 22K
R186 22K
R165 22K
C85 0.330UF
L_AUX2 OUT 38A8<
INTERNAL FAX/MODEM
J49
2X4BERG
39D2> IN L_MOD_OUT
39D2> IN R_MOD_OUT
41B1> IN L+R_MIC_OUT
R178 5.6K
R188 5.6K
C158 1UF
C69 1UF
C148 0.001UF
6.8K R208
6.8K R199
0.001UF C137
AUX_RTN
IBM
CD ROM /FAX MODEM
DATE: 15 DEC 1995
SIZE B
REVISION
DRWNG PART NUMBER MPRZP1SCU-03
POWERPC 604 SMP
REFERENCE DESIGN
SHEET 42 OF 64
MOTHERBOARD

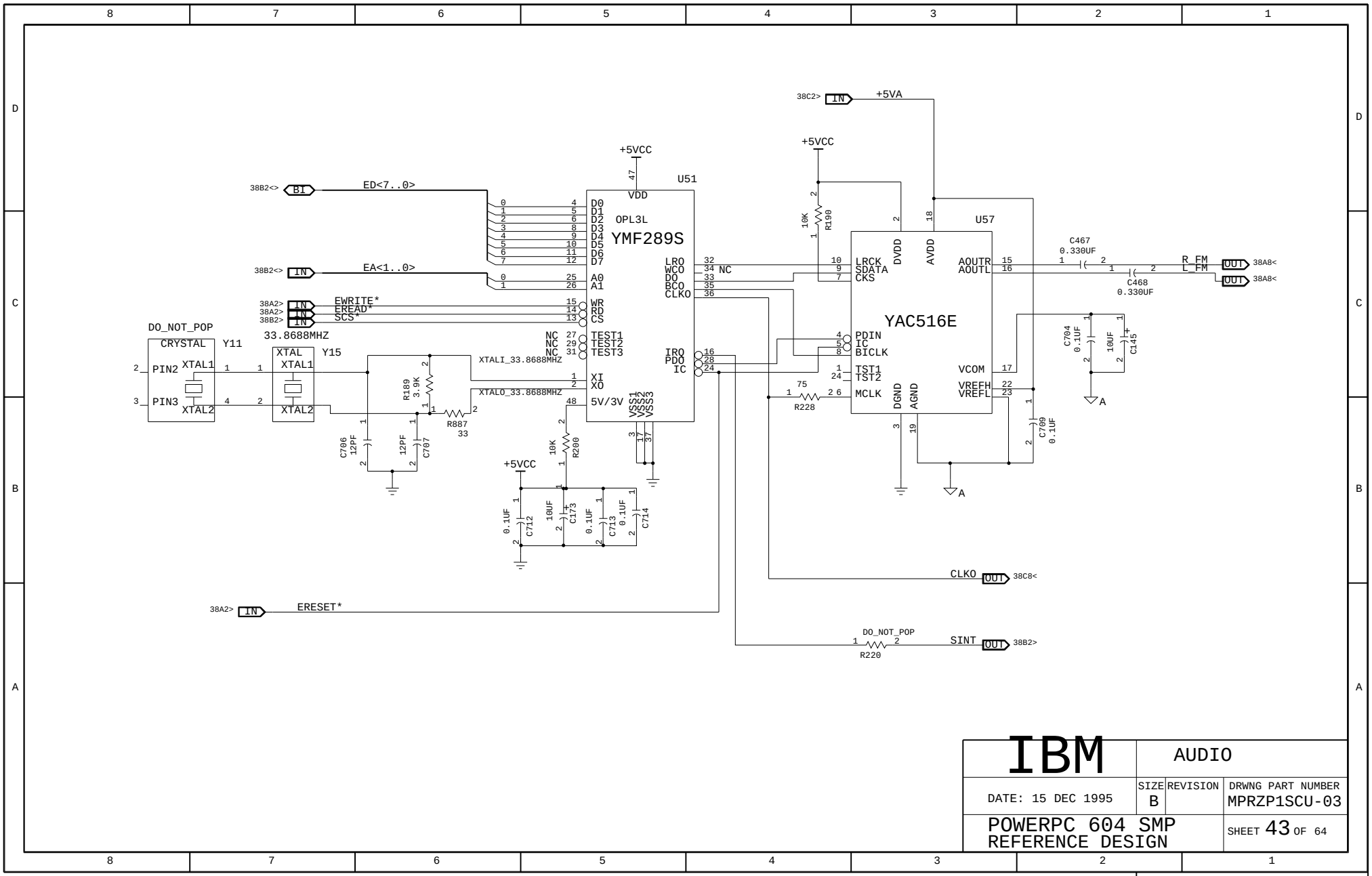

IBM	AUDIO		
DATE: 15 DEC 1995	SIZE B	REVISION	DRWNG PART NUMBER MPRZP1SCU-03
POWERPC 604 SMP REFERENCE DESIGN			SHEET 43 OF 64

MOTHERBOARD

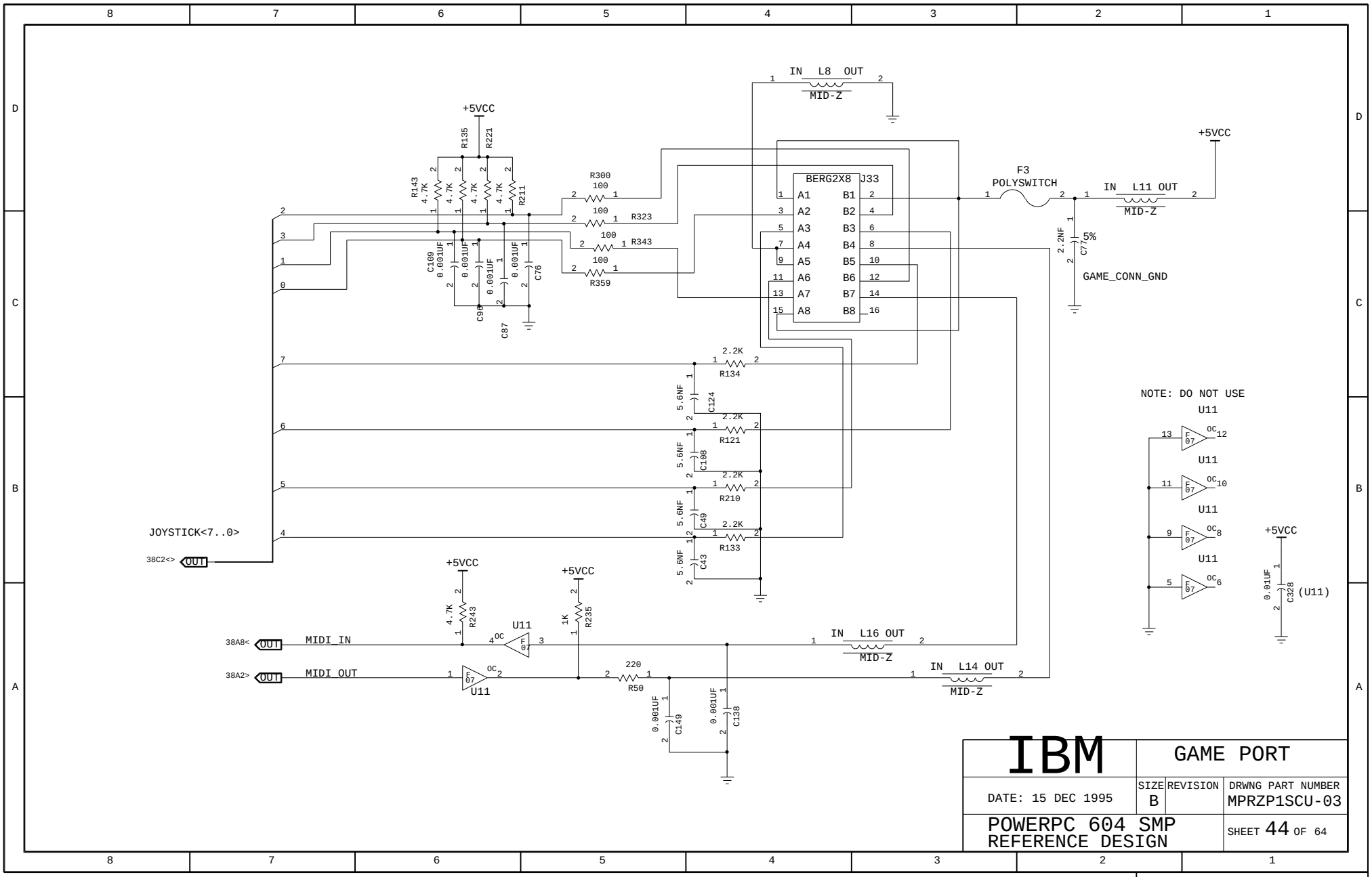

IBM	GAME PORT		
DATE: 15 DEC 1995	SIZE B	REVISION	DRWNG PART NUMBER MPRZP1SCU-03
POWERPC 604 SMP REFERENCE DESIGN			SHEET 44 OF 64

MOTHERBOARD

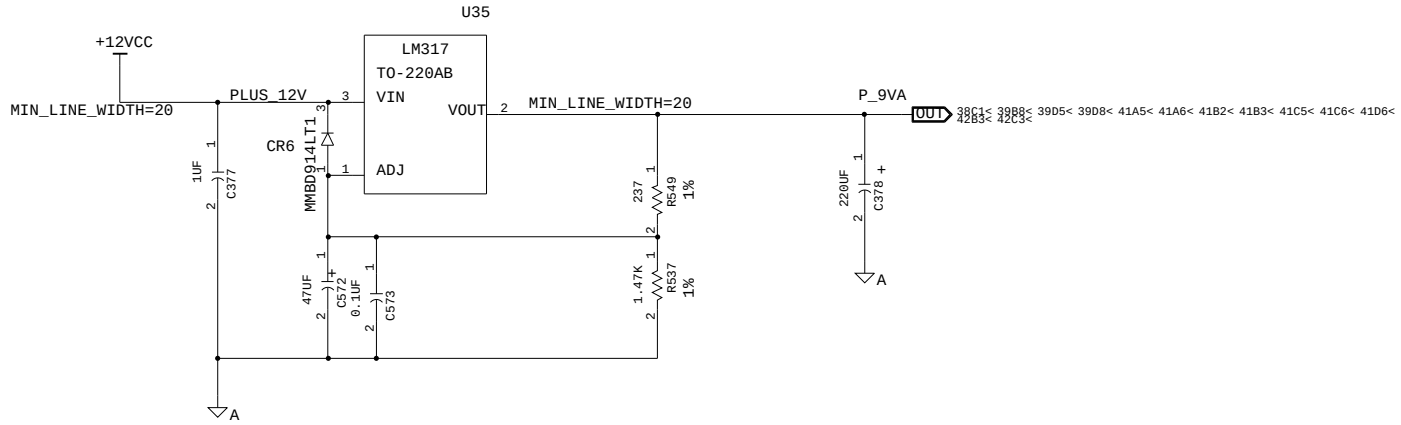

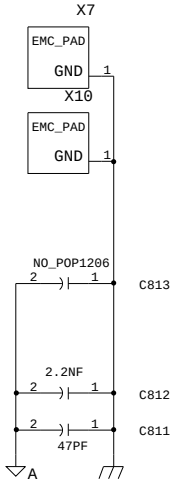

PLACE EMC_PAD AT AUDIO JACKS

PLACE C813 AT AUDIO MOUNTING HOLE

IBM	AUDIO +9V REGULATION		
DATE: 15 DEC 1995	SIZE B	REVISION	DRWNG PART NUMBER MPRZP1SCU-03
POWERPC 604 SMP REFERENCE DESIGN	SHEET 45 OF 64		

MOTHERBOARD

SYSTEM EPLD

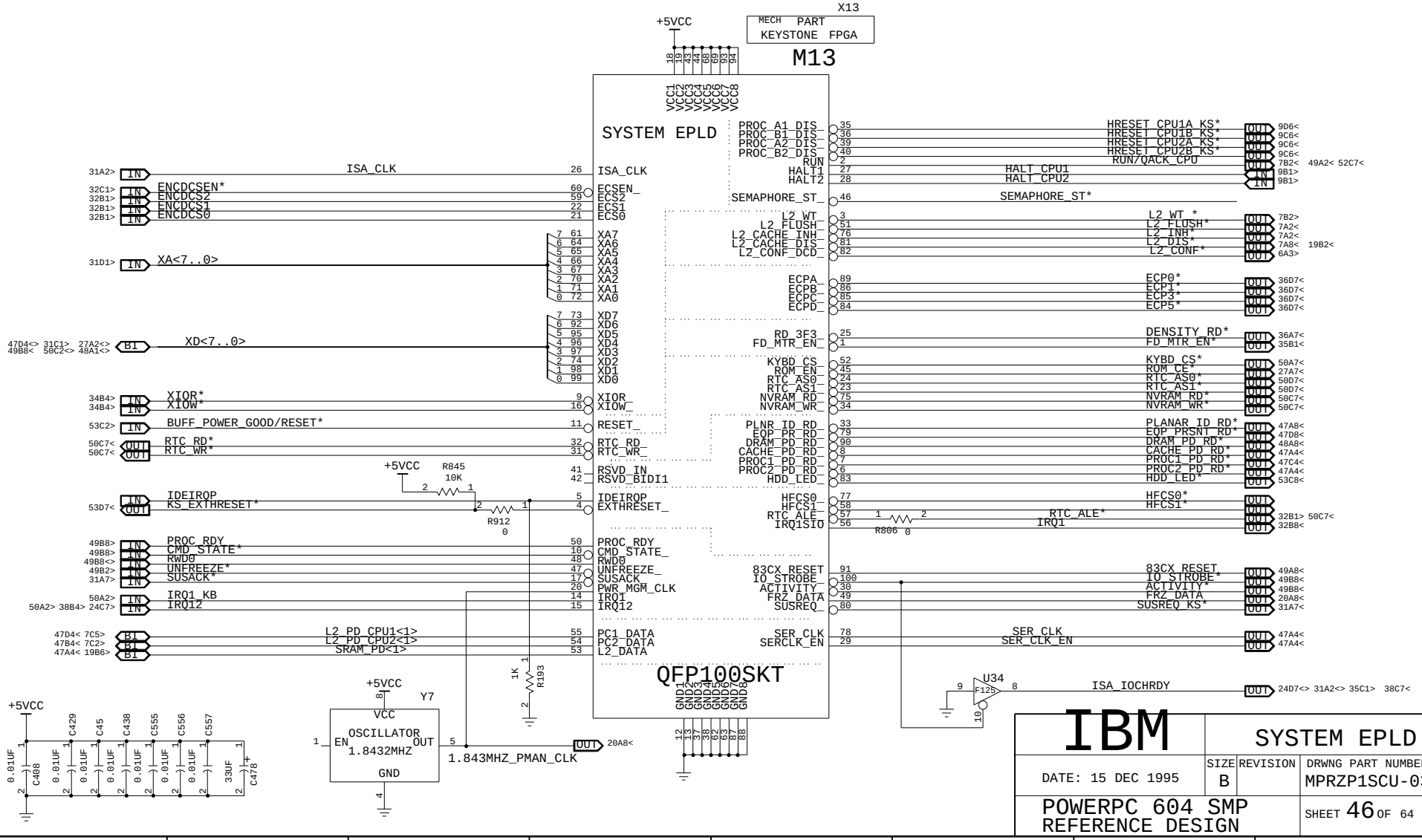

IBM	SYSTEM EPLD		
DATE: 15 DEC 1995	SIZE B	REVISION	DRWNG PART NUMBER MPRZP1SCU-03
POWERPC 604 SMP REFERENCE DESIGN			SHEET 46 OF 64

MOTHERBOARD

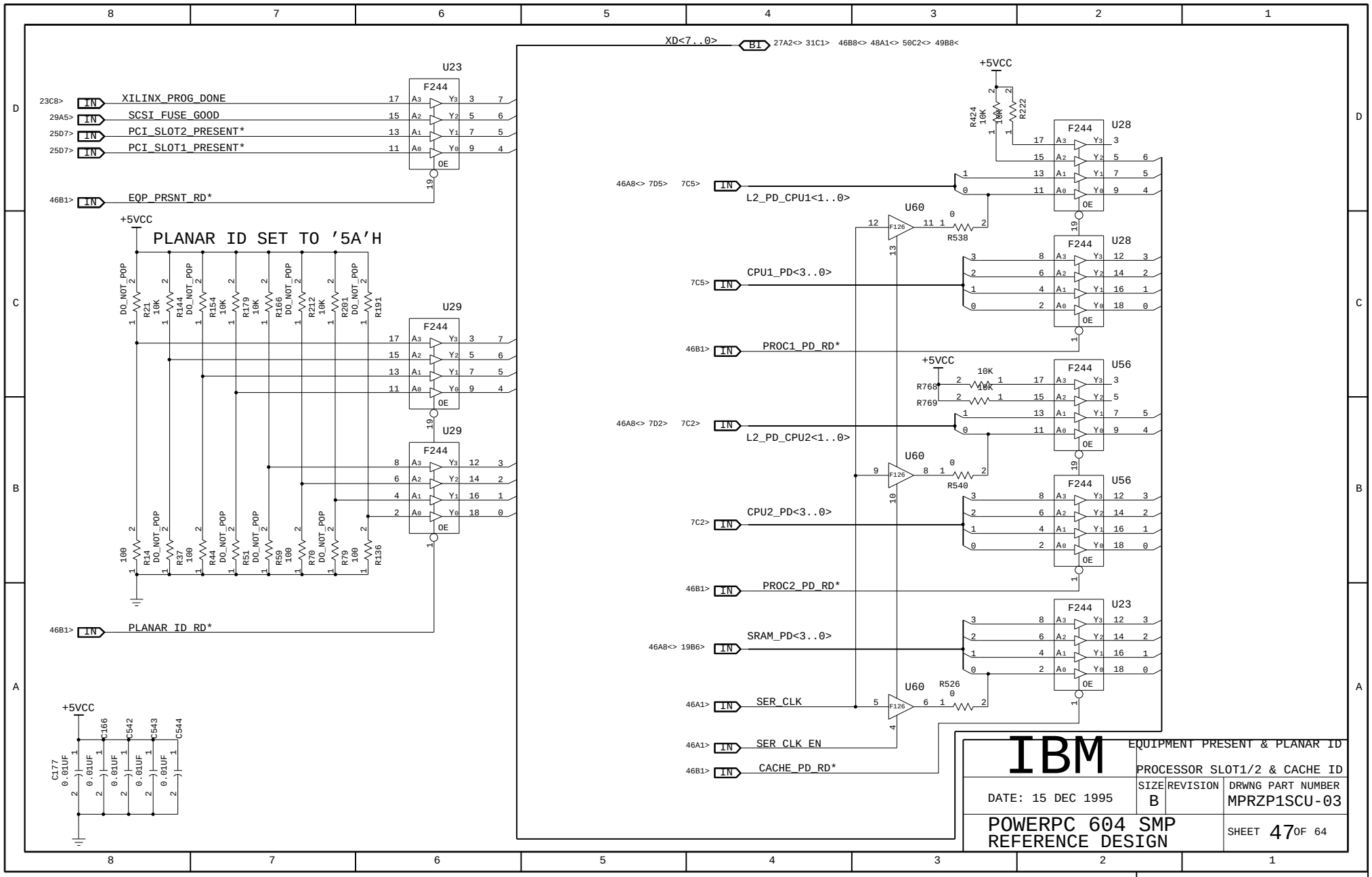
XD<7..0>
B1
27A2<> 31C1> 46B8<> 48A1<> 50C2<> 49B8<
U23
F244
23C8>
XILINX_PROG_DONE
29A5>
SCSI_FUSE_GOOD
25D7>
PCI_SLOT2_PRESENT*
25D7>
PCI_SLOT1_PRESENT*
46B1>
EQP_PRSNT_RD*
+5VCC
PLANAR ID SET TO '5A'H
U29
F244
46B1>
PLANAR ID RD*
+5VCC
C177
C166
C542
C543
C544
0.01UF
+5VCC
R424
10K
R222
U28
F244
46A8<> 7D5>
7C5>
L2_PD_CPU1<1..0>
U60
F126
R538
7C5>
CPU1_PD_<3..0>
46B1>
PROC1_PD_RD*
+5VCC
R768
R769
10K
U56
F244
46A8<> 7D2>
7C2>
L2_PD_CPU2<1..0>
U60
F126
R540
7C2>
CPU2_PD_<3..0>
46B1>
PROC2_PD_RD*
U23
F244
46A8<> 19B6>
SRAM_PD_<3..0>
46A1>
SER_CLK
U60
F126
R526
46A1>
SER_CLK EN
46B1>
CACHE_PD_RD*
IN
IBM
EQUIPMENT PRESENT & PLANAR ID
PROCESSOR SLOT1/2 & CACHE ID
DATE: 15 DEC 1995
SIZE B
REVISION
DRWNG PART NUMBER
MPRZP1SCU-03
POWERPC 604 SMP
REFERENCE DESIGN
SHEET 47 OF 64
MOTHERBOARD

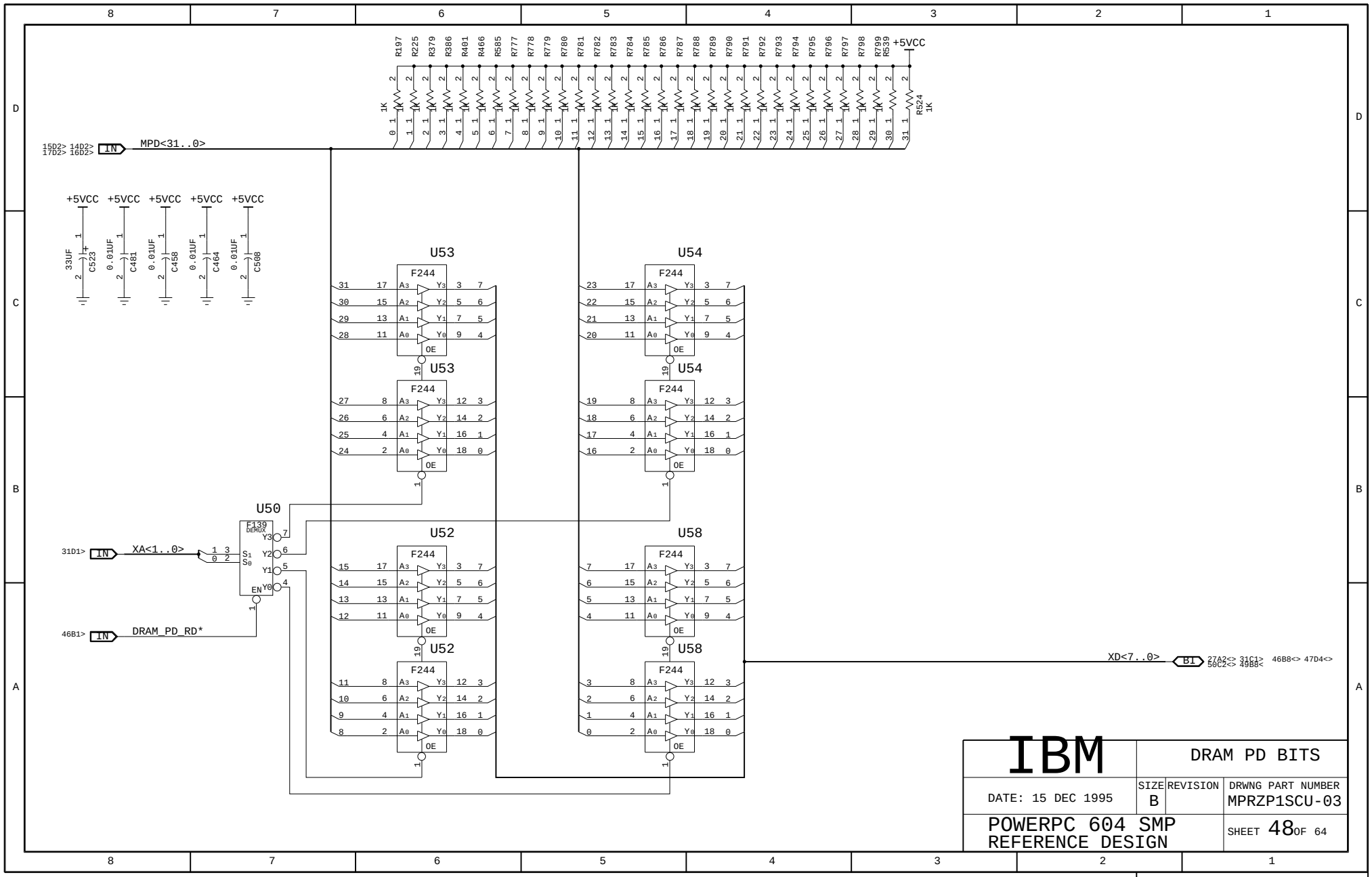
MPD<31..0>
XA<1..0>
DRAM_PD_RD*
XD<7..0>
+5VCC
U50
U52
U53
U54
U58
F244
F139
DEMUX
IBM
DRAM PD BITS
DATE: 15 DEC 1995
SIZE B
REVISION
DRWNG PART NUMBER MPRZP1SCU-03
POWERPC 604 SMP
REFERENCE DESIGN
SHEET 48 OF 64
MOTHERBOARD

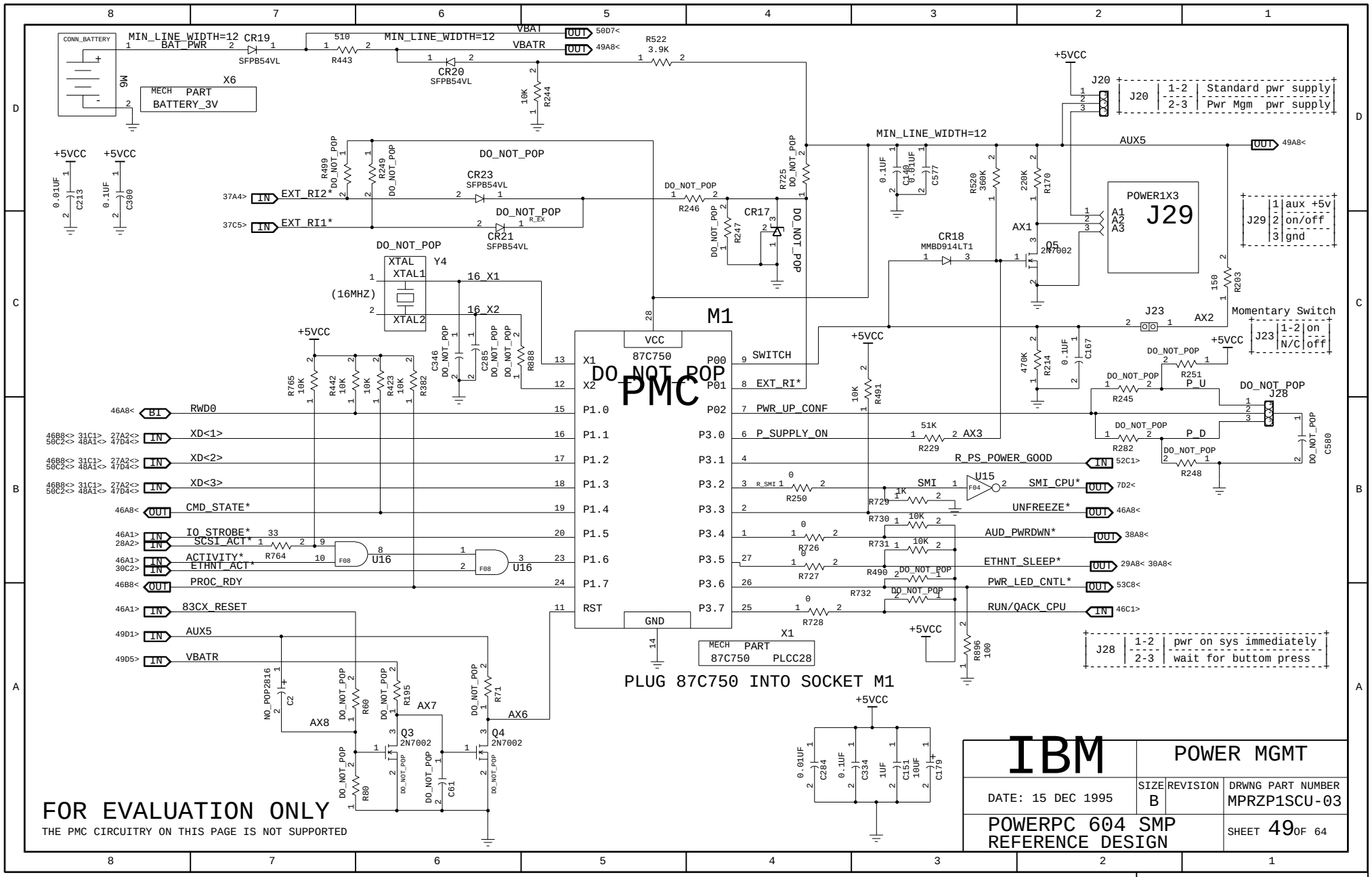
CONN_BATTERY
M6
MIN_LINE_WIDTH=12
BAT_PWR
CR19
SFPB54VL
510
R443
VBAT
VBATR
CR20
R522
3.9K
10K
R244
X6
MECH PART
BATTERY_3V
+5VCC
C213
C300
DO_NOT_POP
R499
R249
CR23
CR21
EXT_RI2*
EXT_RI1*
R246
R247
CR17
R725
XTAL
XTAL1
XTAL2
Y4
(16MHZ)
16_X1
16_X2
M1
87C750
PMC
VCC
GND
X1
X2
P1.0
P1.1
P1.2
P1.3
P1.4
P1.5
P1.6
P1.7
RST
P00
P01
P02
P3.0
P3.1
P3.2
P3.3
P3.4
P3.5
P3.6
P3.7
SWITCH
EXT_RI*
PWR_UP_CONF
P_SUPPLY_ON
R_PS_POWER_GOOD
SMI
SMI_CPU*
UNFREEZE*
AUD_PWRDWN*
ETHNT_SLEEP*
PWR_LED_CNTL*
RUN/QACK_CPU
RWD0
XD<1>
XD<2>
XD<3>
CMD_STATE*
IO_STROBE*
SCSI_ACT*
ACTIVITY*
ETHNT_ACT*
PROC_RDY
83CX_RESET
AUX5
VBATR
MECH PART
87C750 PLCC28
PLUG 87C750 INTO SOCKET M1
J20
Standard pwr supply
Pwr Mgm pwr supply
POWER1X3
J29
A1
A2
A3
aux +5v
on/off
gnd
CR18
MMBD914LT1
Q5
2N7002
AX1
J23
AX2
Momentary Switch
on
off
N/C
P_U
P_D
J28
pwr on sys immediately
wait for buttom press
R491
R491
R229
R250
R729
R730
R731
R726
R727
R490
R732
R728
R096
100
U15
F04
U16
F08
R764
R765
R442
R423
R382
R868
C346
C285
R195
R60
R80
R71
C61
Q3
Q4
AX6
AX7
AX8
NO_POP2816
C2
C284
C334
C151
C179
FOR EVALUATION ONLY
THE PMC CIRCUITRY ON THIS PAGE IS NOT SUPPORTED
IBM
POWER MGMT
DATE: 15 DEC 1995
SIZE B
REVISION
DRWNG PART NUMBER
MPRZP1SCU-03
POWERPC 604 SMP
REFERENCE DESIGN
SHEET 49 OF 64
MOTHERBOARD

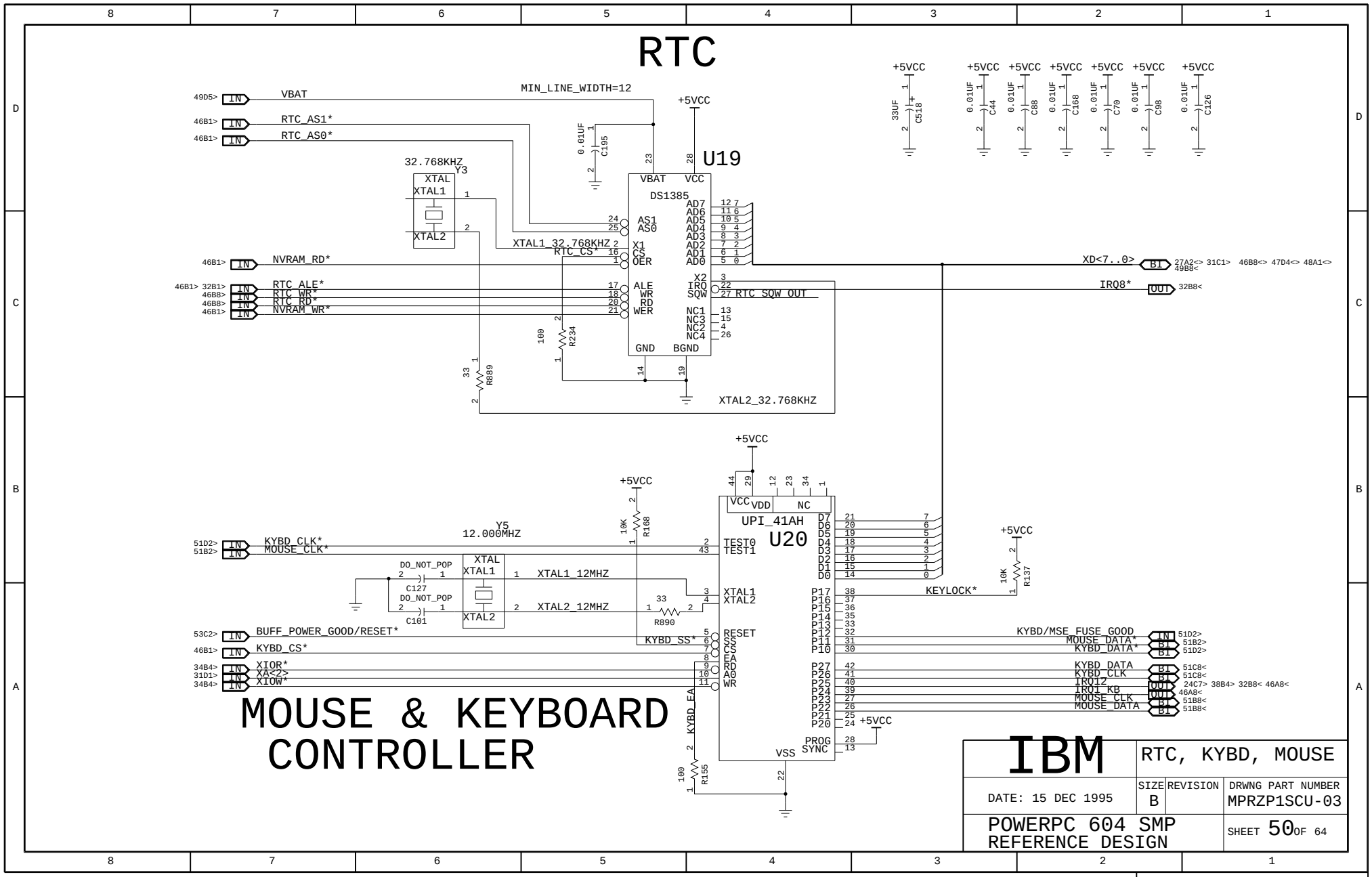
RTC
MOUSE & KEYBOARD CONTROLLER
U19
DS1385
U20
UPI_41AH
32.768KHZ
Y3
Y5
12.000MHZ
MIN_LINE_WIDTH=12
XTAL1_32.768KHZ
XTAL2_32.768KHZ
XTAL1_12MHZ
XTAL2_12MHZ
RTC_SQW_OUT
KEYLOCK*
KYBD/MSE_FUSE_GOOD
IBM
RTC, KYBD, MOUSE
DATE: 15 DEC 1995
SIZE B
REVISION
DRWNG PART NUMBER MPRZP1SCU-03
POWERPC 604 SMP REFERENCE DESIGN
SHEET 50 OF 64
MOTHERBOARD

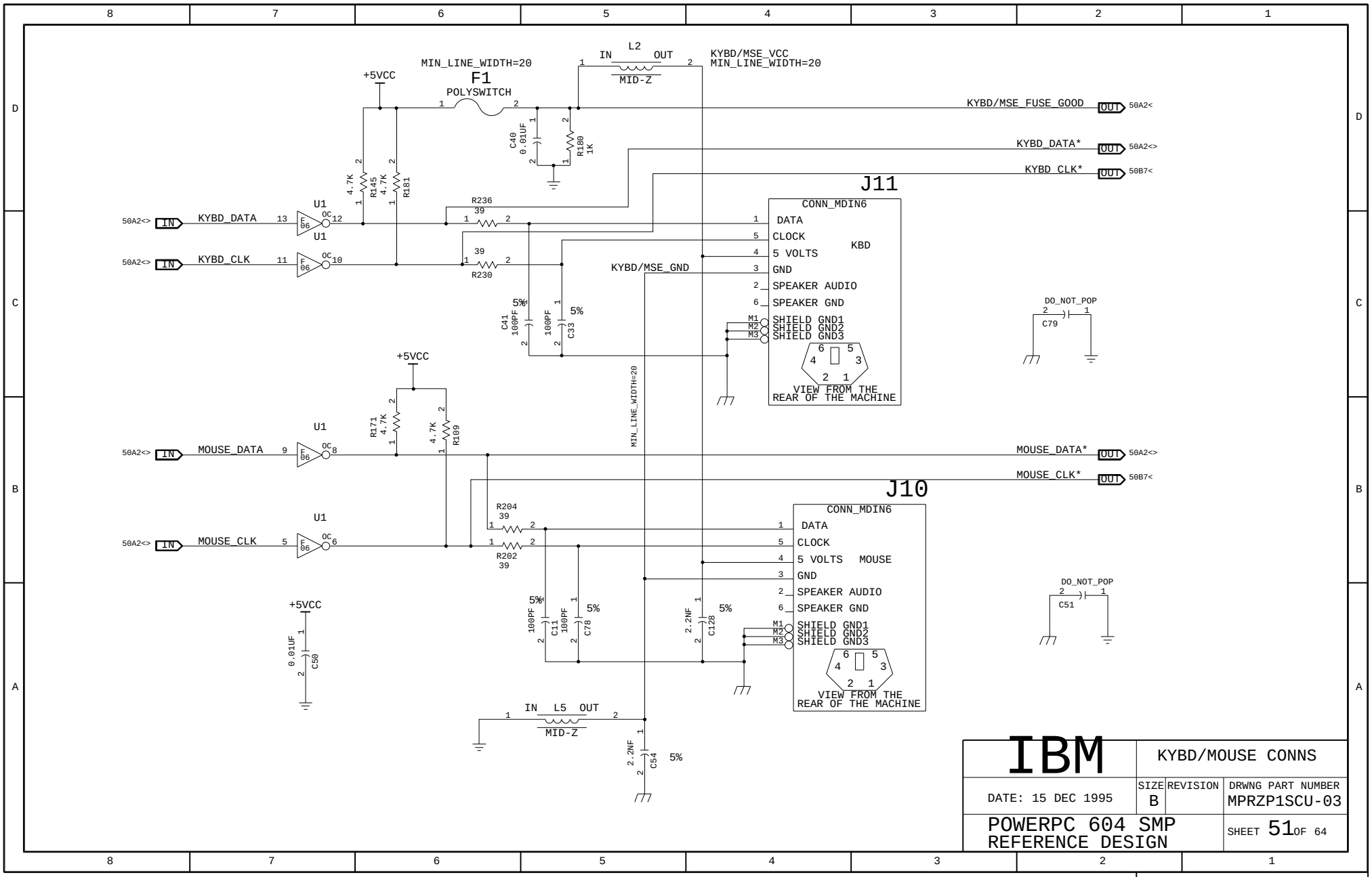
MIN_LINE_WIDTH=20
F1
POLYSWITCH
+5VCC
L2
IN
OUT
MID-Z
KYBD/MSE_VCC
MIN_LINE_WIDTH=20
KYBD/MSE_FUSE_GOOD
KYBD_DATA*
KYBD_CLK*
C40
0.01UF
R180
1K
R145
4.7K
R181
4.7K
R236
39
R230
39
U1
KYBD_DATA
KYBD_CLK
J11
CONN_MDIN6
DATA
CLOCK
5 VOLTS
GND
SPEAKER AUDIO
SPEAKER GND
SHIELD GND1
SHIELD GND2
SHIELD GND3
KBD
KYBD/MSE_GND
C41
100PF
C33
100PF
5%
VIEW FROM THE
REAR OF THE MACHINE
DO_NOT_POP
C79
R171
4.7K
R109
4.7K
MIN_LINE_WIDTH=20
MOUSE_DATA
MOUSE_CLK
MOUSE_DATA*
MOUSE_CLK*
J10
CONN_MDIN6
DATA
CLOCK
5 VOLTS
MOUSE
GND
SPEAKER AUDIO
SPEAKER GND
SHIELD GND1
SHIELD GND2
SHIELD GND3
R204
39
R202
39
C11
100PF
C78
100PF
C128
2.2NF
DO_NOT_POP
C51
0.01UF
C50
L5
MID-Z
C54
2.2NF
IBM
KYBD/MOUSE CONNS
DATE: 15 DEC 1995
SIZE
B
REVISION
DRWNG PART NUMBER
MPRZP1SCU-03
POWERPC 604 SMP
REFERENCE DESIGN
SHEET 51 OF 64
MOTHERBOARD

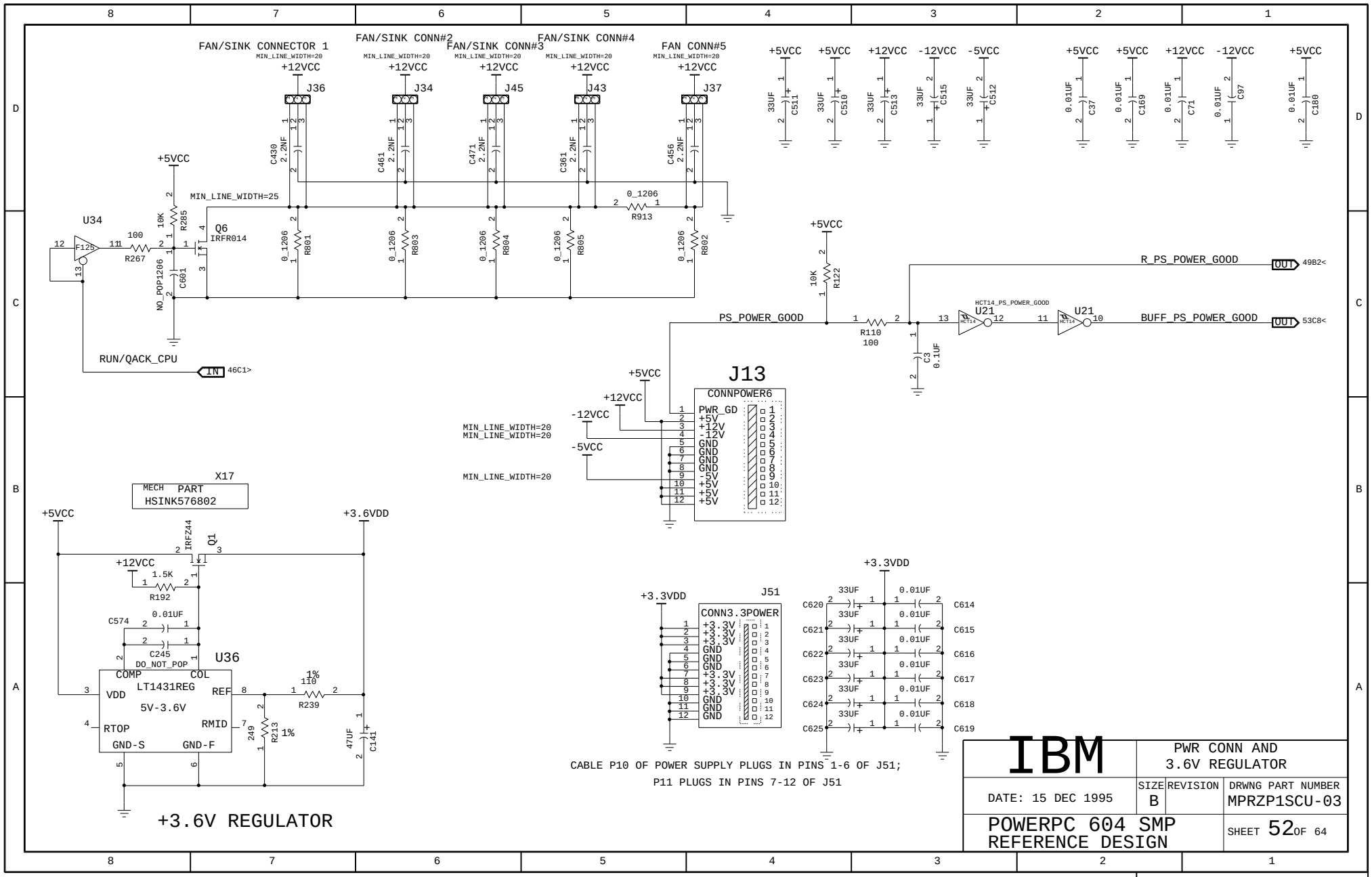
FAN/SINK CONNECTOR 1
FAN/SINK CONN#2
FAN/SINK CONN#3
FAN/SINK CONN#4
FAN CONN#5
MIN_LINE_WIDTH=20
+12VCC
J36
J34
J45
J43
J37
C430 2.2NF
C461 2.2NF
C471 2.2NF
C361 2.2NF
C456 2.2NF
+5VCC
MIN_LINE_WIDTH=25
0_1206
R913
U34
F125
100
R267
10K
R285
Q6
IRFR014
C601
NO_POP1206
R801
R803
R804
R805
R802
RUN/QACK_CPU
IN
46C1>
-12VCC
-5VCC
C511
C510
C513
C515
C512
C37
C169
C71
C97
C180
33UF
0.01UF
R122
R110
C3 0.1UF
HCT14_PS_POWER_GOOD
U21
R_PS_POWER_GOOD
OUT
49B2<
PS_POWER_GOOD
BUFF_PS_POWER_GOOD
53C8<
J13
CONNPOWER6
PWR_GD
GND
-5V
MIN_LINE_WIDTH=20
X17
MECH PART
HSINK576802
+3.6VDD
IRFZ44
Q1
1.5K
R192
C574
C245
DO_NOT_POP
U36
COMP
COL
LT1431REG
VDD
REF
5V-3.6V
RTOP
RMID
GND-S
GND-F
110
R239
249
R213
47UF
C141
+3.6V REGULATOR
J51
CONN3.3POWER
+3.3V
C620
C621
C622
C623
C624
C625
C614
C615
C616
C617
C618
C619
CABLE P10 OF POWER SUPPLY PLUGS IN PINS 1-6 OF J51;
P11 PLUGS IN PINS 7-12 OF J51
IBM
PWR CONN AND
3.6V REGULATOR
DATE: 15 DEC 1995
SIZE B
REVISION
DRWNG PART NUMBER
MPRZP1SCU-03
POWERPC 604 SMP
REFERENCE DESIGN
SHEET 52 OF 64
MOTHERBOARD

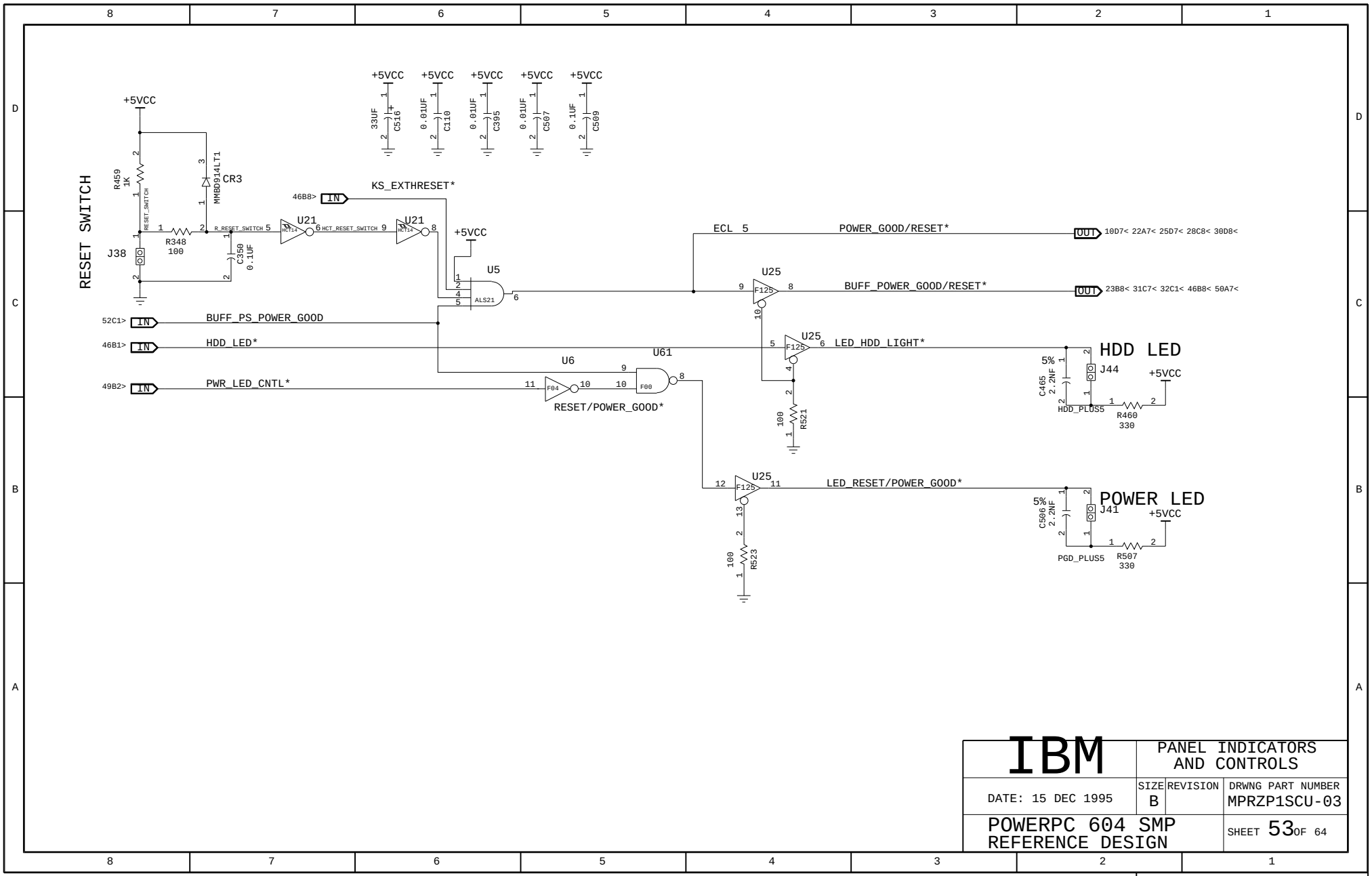

IBM	PANEL INDICATORS AND CONTROLS		
DATE: 15 DEC 1995	SIZE B	REVISION	DRWNG PART NUMBER MPRZP1SCU-03
POWERPC 604 SMP REFERENCE DESIGN			SHEET 53 OF 64

MOTHERBOARD

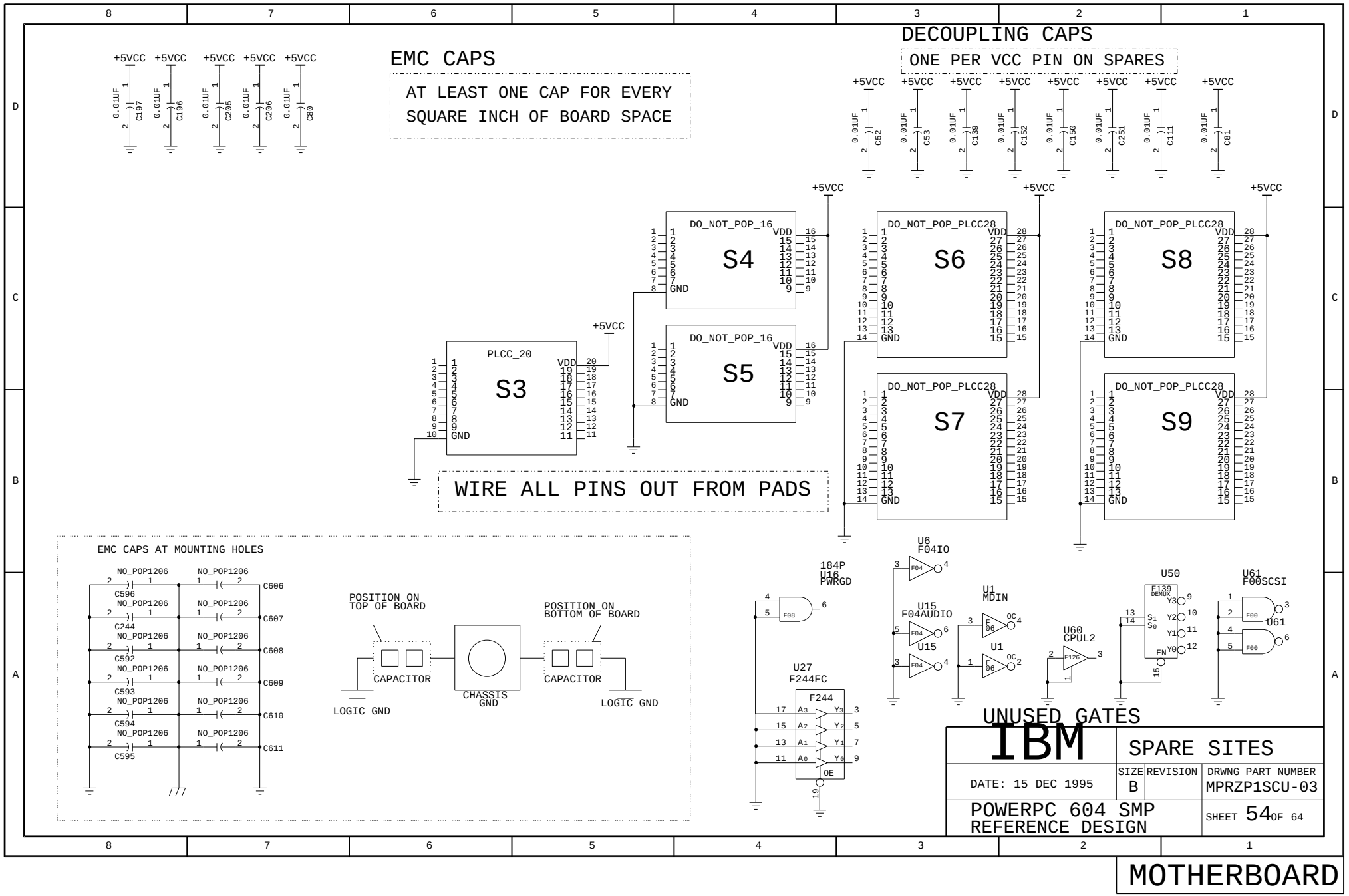
EMC CAPS
AT LEAST ONE CAP FOR EVERY SQUARE INCH OF BOARD SPACE
DECOUPLING CAPS
ONE PER VCC PIN ON SPARES
+5VCC
0.01UF
C197
C196
C205
C206
C80
C52
C53
C139
C152
C150
C251
C111
C81
DO_NOT_POP_16
S4
S5
PLCC_20
S3
DO_NOT_POP_PLCC28
S6
S7
S8
S9
VDD
GND
WIRE ALL PINS OUT FROM PADS
EMC CAPS AT MOUNTING HOLES
NO_POP1206
C596
C244
C592
C593
C594
C595
C606
C607
C608
C609
C610
C611
POSITION ON TOP OF BOARD
POSITION ON BOTTOM OF BOARD
CAPACITOR
CHASSIS GND
LOGIC GND
184P
U16
PWRGD
F08
U27
F244FC
F244
A3
A2
A1
A0
Y3
Y2
Y1
Y0
OE
U6
F04IO
F04
U15
F04AUDIO
U1
MDIN
F06
OC
U60
CPUL2
F126
U50
F139
DEMUX
S1
S0
EN
U61
F00SCSI
F00
UNUSED GATES
IBM
SPARE SITES
DATE: 15 DEC 1995
SIZE
B
REVISION
DRWNG PART NUMBER
MPRZP1SCU-03
POWERPC 604 SMP
REFERENCE DESIGN
SHEET 54 OF 64
MOTHERBOARD

```
*** Signal Cross-Reference ***
   --- for the entire design --

+5VA            38C2> 40B3< 40D3< 41A3< 41C2< 41D3<
                43D4<
+5VA_4403       21C5
+5VF            38D5> 39A3< 39B3< 39B5< 39B6<
1.843MHZ_PMAN_CLK 46A5> 20A8<
14.3181MHZ      32D7> 24C7<
16_X1           49C6
16_X2           49C6
20.00MHZ_XTAL1  30C5
20.00MHZ_XTAL2  30C5
24MHZ_SUPERIO   35D7
83CX_RESET      46A1> 49A8<
663_BCLK        20B1> 11A5<
663_CPU_PAR_ERR * 11C1> 10C7<
663_MEM_ERR *   11C1> 10C7<
663_SBE *       11C1> 10C7<
664_BCLK        20C1> 10D7<
664_PCICLK      21C1> 12B6<
970COM_FRZ *    20A6<
970EXT_FB       20A6<
970FRZ_STROBE   20A6<
970MR/3ST *     20B6<
4403_BCLK       20A1> 21C7<
4403_FBCLK      21C6
4403_FBCLK_R    21B6
AACK *          6D2<> 10C1<>
ABB *           6D2<> 33A7< 33C7<
ACTIVITY *      46A1> 49B8<
AOS_RR_MMRS     10C1> 11A5<
ARTRY *         6D2<> 10C1<>
AUD_PWRDWN *    49B2> 38A8<
AUD_REFFLT      38A4
AUD_VREF        38A4
AUX5            49D1> 49A8<
AUX_RTN         42A5
AX1             49C3
AX2             49C1
AX3             49B3
AX6             49A6
AX7             49A6
AX8             49A7
A_CPU1_ <31..0> 6B8<> 33C3<> 10B7<
A_CPU2_ <31..0> 6C2<> 19A6<
BAT_PWR         49D8
BG_CPU1 *       10D1> 33C3> 6C8< 7A8<
BG_CPU2 *       10D1> 33C3> 6C2< 7A5<
BITX            32C2
BR_CPU1 *       6D8> 7A8> 10D7< 33B7<
BR_CPU2 *       6D2> 7A5> 10D7< 33B7<
BUFF_POWER_GOOD/RESET * 53C2> 23B8< 31C7< 32C1<
                46B8< 50A7<
BUFF_PS_POWER_GOOD 52C1> 53C8<
C2P_WRL_OPEN    11B6
CACHE_PD_RD *   46B1> 47A4<
CI *            6A4
CKSTP_CPU1 *    7B5> 9D6<
CKSTP_CPU2 *    7B2> 9D6<
CKSTP_ESP *     9C8
CLKO            43B3> 38C8<
CMD_STATE *     49B8> 46A8<
CONN_SER1_GND   37C3
CONN_SER2_GND   37B3
CPU1_PD <3..0>  7C5> 8D8< 47C4<
CPU2_PD <3..0>  7C2> 8D8< 47B4<
CPU_DATA_OE *   11B6
CPU_FREQ_CFG <3..0> 8D4> 7A2<
CPU_RDL_OPEN    11B6
CRS_C2PWXS      11B6
CTS1 *          37C7> 35B8<
CTS2 *          37A7> 35B8<
DBB *           5D3<> 33A7< 33C7<
DBB_P1TR        5D6
DBG *           10C1> 5D2<
DCD1 *          37D7> 35B8<
DCD2 *          37B7> 35B8<
DENSITY_RD *    46B1> 36A7<
DPAL_PCICLK     21C1> 33B7<
DPE_60X *       7A2> 10C7<
DP_CPU1_ <7..0> 5A8<> 13C6<>
DP_CPU2_ <7..0> 5A2<> 18A2<>
DRAM_PD_RD *    46B1> 48A8<
DRTRY *         7C5
DRVMOD0_CPU1    7B8
DRVMOD0_CPU2    7B2
DRVMOD1_CPU1    7B8
DRVMOD1_CPU2    7B2
DSR1 *          37C7> 35B8<
DSR2 *          37A7> 35B8<
DTR1 *          35B1> 37C7<
DTR2 *          35B8> 37A7<
DUAL_CTRL_REF   11B6
D_CPU1_ <63..0> 5C8<> 13D6<>
D_CPU2_ <63..0> 5C2<> 18B2<>
EA <1..0>       38B2<> 43C7<
ECC_LE_SEL      11B6
ECP0 *          46C1> 36D7<
ECP1 *          46C1> 36D7<
ECP3 *          46C1> 36D7<
ECP5 *          46C1> 36D7<
ED <7..0>       38B2<> 43D7<>
ENCDCS0         32B1> 46C8<
ENCDCS1         32B1> 46C8<
ENCDCS2         32B1> 46C8<
ENCDCSEN *      32C1> 46C8<
EN_Y2_2VIA      28C8<
EQP_PRSNT_RD *  46B1> 47D8<
EREAD *         38A2> 43C7<
ERESET *        38A2> 43A7<
ETHNT_ACT *     30C2> 49B8<
ETHNT_PCICLK    21C1> 30D8<
ETHNT_SLEEP *   49B2> 29A8< 30A8<
EWRITE *        38A2> 43C7<
EXT_CTS1 *      37C5
EXT_CTS2 *      37A6
EXT_DCD1 *      37D5
EXT_DCD2 *      37B6
EXT_DSR1 *      37C5
EXT_DSR2 *      37A6
EXT_DTR1 *      37C5
EXT_DTR2 *      37A5
EXT_L_CD        42C7
EXT_RI *        49C4
EXT_RI1 *       37C5> 49C7<
EXT_RI2 *       37A4> 49D7<
EXT_RTS1 *      37C5
EXT_RTS2 *      37A5
EXT_R_CD        42B7
EXT_SCSI_GND    29A3
EXT_SCSI_GND24  29A1> 28D8<
EXT_SIN1        37C5
EXT_SIN2        37A6
EXT_SOUT1 *     37C5
EXT_SOUT2 *     37A5
EXT_TERM_PWR    29C3
FC_MEMW *       31B4
FC_PCIPERR *    31B6
FC_RTCAS        32B3
FC_SUSREQ *     31A6
FDD_DEN1        36A6
FDD_DEN2        36A6
FDD_DEN3        36A6
FDD_DEN4        36A6
FDD_DENSEL      36B6
FD_MTR_EN *     46B1> 35B1<
FLASH_WE_A18    27C5
FLOPPY <?..?>   35A1<> 36A2<>
FPAL_PCICLK     21C1>
FPGA_CCLK       23C5
FPGA_DIN        23C5
FRD *           32D1> 27A7<
FRZ_DATA        46A1> 20A8<
FWR *           32D1> 27A7<
GAME_CONN_GND   44C2
GBL *           6A3<> 10C1>
HALT/QREQ_CPU1A 7B5> 9B4<
HALT/QREQ_CPU1B 8B7> 9B4<
HALT/QREQ_CPU2A 7B2> 9B4<
HALT/QREQ_CPU2B 8A7> 9B4<
HALT_CPU1       9B1> 46C1<
HALT_CPU2       9B1> 46C1<
HCT14_PS_POWER_GOOD 52C3
HCT_RESET_SWITCH 53C7
HDD_LED *       46B1> 53C8<
HDD_PLUS5       53B2
HEAD_GND        39B2
HEAD_LEFT       39B2
HEAD_RIGHT      39B2
HFCS0 *         46B1>
HFCS1 *         46B1>
HPREQ *         31A6
HRESET_CPU1A *  9D2> 7D5<
HRESET_CPU1A_KS * 46D1> 9D6<
HRESET_CPU1B *  9D2> 8B7<
HRESET_CPU1B_KS * 46C1> 9C6<
HRESET_CPU2A *  9D2> 7D2<
HRESET_CPU2A_KS * 46C1> 9C6<
HRESET_CPU2B *  9C2> 8A7<
HRESET_CPU2B_KS * 46C1> 9C6<
HRESET_ESP *    9C5
IDEIRQP         46B8<
IDENT/PDACK *   36C2> 35C8<
IGN_PCI_AD31    12B6
INIT_CPU1A_MPIC * 23B2> 9C4<
INIT_CPU1B_MPIC * 23B2> 9B4<
INIT_CPU2A_MPIC * 23B2> 9B4<
INIT_CPU2B_MPIC * 23C2> 9B4<
INT_664 *       10D1> 22B7<
INT_CPU1A *     22A3> 7D5<
INT_CPU1B *     22A3> 8B7<
INT_CPU2A *     22A3> 7D2<
INT_CPU2B *     22A3> 8A7<
INT_ETHNT *     30A8<> 22B7<
INT_SCSI *      28A2> 22B7<
INT_SCSI_ACK *  29C7
INT_SCSI_ATN *  29C7
INT_SCSI_BSY *  29C7
INT_SCSI_CD *   29C7
INT_SCSI_GND24  29B8> 28D8<
INT_SCSI_IO *   29C7
INT_SCSI_MSG *  29C7
INT_SCSI_REQ *  29C7
INT_SCSI_RESET * 29C7
INT_SCSI_SEL *  29C7
INT_SIO         32B8> 22A7<
INT_SLOT1 *     25C2> 22A7<
INT_SLOT2 *     25C2> 22A7<
INT_SLOT3 *     25C2> 22A7<
INT_SLOT4 *     25C2> 22B7<
IO_STROBE *     46A1> 49B8<
IRQ1            46B1> 32B8<
IRQ1_KB         50A2> 46A8<
IRQ3            25B1> 35C1> 32B8<
IRQ4            25B1> 35D1> 32B8<
IRQ5            25B1> 35D1> 38B4> 32B8<
IRQ6            25B1> 35D1> 32B8<
IRQ7            25B1> 35D1> 38B4> 32B8<
IRQ8 *          50C2> 32B8<
IRQ9            25B1> 38B4> 32B8<
IRQ10           25B1> 32B8<
IRQ11           25B1> 38B4> 32B8<
IRQ12           24C7> 38B4> 50A2> 32B8< 46A8<
IRQ13           28B2> 32B8<
IRQ14           25B1> 38B4> 32B8<
IRQ15           25B1> 28A2> 32B8<
ISA_0WS *       24D7<> 31A2> 35C1>
ISA_AEN         24D7<> 32C6> 35C8< 38C7<
ISA_BALE        24C7<> 31B2>
ISA_CLK         31A2> 24A7< 46C8<
ISA_DACK0 *     32C7> 24C7< 36D7< 38A8<
ISA_DACK1 *     32C7> 24D7< 36D7< 38A8<
ISA_DACK2 *     32C7> 24D7< 35C8<
ISA_DACK3 *     32C7> 24D7< 36D7< 38A8<
ISA_DACK5 *     32C7> 24D7< 36D7<
ISA_DACK6 *     32C7> 24D7<
ISA_DACK7 *     32C7> 24D7<
ISA_DRQ0        24C7> 36D2> 38A2> 32C6<
ISA_DRQ1        24C7> 36D2> 38A2> 32C6<
ISA_DRQ2        24C7> 35C1> 32C6<
ISA_DRQ3        24C7> 36D2> 38A2> 32C6<
ISA_DRQ5        24C7> 36D2> 32C6<
ISA_DRQ6        24C7> 32C6<
ISA_DRQ7        24C7> 32C6<
ISA_IOCHCK *    25C1> 32A8<
ISA_IOCHRDY     24D7<> 31A2<> 35C1> 46A1> 38C7<
ISA_IOCS16 *    24C7> 31A2<> 35C8<
ISA_IOR *       24A7<> 31B2<> 34B6< 35C8< 38C7<
ISA_IOW *       24D7<> 31B2<> 34B6< 35C8< 38C7<
ISA_LA <23..17> 24A7<> 31C1<> 27A7< 27B7<
ISA_MASTER *    24C7> 31A2>
ISA_MEMCS16 *   24C7<> 31A2<>
ISA_MEMR *      24A7<> 31B2<>
ISA_MEMW *      24A7<> 31B2<>
ISA_REFRESH *   31A2> 24C7<
ISA_RESET       31A1> 25C1< 35C8<
ISA_RESET *     31A1> 38A8<
ISA_SBHE *      24B7<> 31A2>
ISA_SMEMR *     31B2> 24D7<
ISA_SMEMW *     31B2> 24D7<
ISA_TC          32C6> 24C7< 35C8<
JOYSTICK <7..0> 38C2<> 44B8>
KCE0 *          11C6
```

IBM			
DATE: 15 DEC 1995	SIZE B	REVISION	DRWNG PART NUMBER MPRZP1SCU-03
POWERPC 604 SMP REFERENCE DESIGN			SHEET 55 OF 64

MOTHERBOARD

```
KCE1 *          11C6
KCE2 *          11C6
KCE3 *          11C6
KCE4 *          11C6
KCE5 *          11C6
KCE6 *          11C6
KCE7 *          11C6
KEYLOCK *       50A3
KMA <11..0>     11D4> 12C8<
KMWE0 *         11D4> 12C2<
KMWE1 *         11D4> 12C2<
KRE0 *          11C6
KRE1 *          11C6
KRE2 *          11C6
KRE3 *          11C6
KRE4 *          11C6
KRE5 *          11C6
KRE6 *          11C6
KRE7 *          11D6
KS_EXTHRESET *  46B8> 53D7<
KYBD/MSE_FUSE_GOOD 51D2> 50A2<
KYBD/MSE_GND    51C5
KYBD/MSE_VCC    51D4
KYBD_CLK        50A2<> 51C8<
KYBD_CLK *      51D2> 50B7<
KYBD_CS *       46B1> 50A7<
KYBD_DATA       50A2<> 51C8<
KYBD_DATA *     50A2<> 51D2>
KYBD_EA         50A4
KYBD_SS *       50A5
K_AACK *        10C4
K_ARTRY *       10C4
K_BGCPU1 *      10D1> 33C7<
K_BGCPU2 *      10D1> 33C7<
K_BRCPU1 *      33B3> 10C7<
K_BRCPU2 *      33B3> 10C7<
K_DBG *         10C4
K_GBL *         10C4
K_INTCPU *      10D4
K_MCP *         10D4
K_PCIFRAME *    12B2> 33B3>
K_PCIREQ *      10C4
K_SHD *         10C4
K_SRAMADS       10B4
K_SRAMALE *     10B4
K_SRAMCNTEN *   10B4
K_SRAM_WE *     10B4
K_TA *          10C4
K_TAGWE *       10B4
K_TBST *        10C6
K_TEA *         10D4
K_TS *          10C6
K_XATS *        10C6
L+R_MIC_OUT     41B1> 42A8<
L2_CLAIM *      7A2> 10B7<
L2_CONF *       6A3> 46C1>
L2_DIS *        46C1> 7A8< 19B2<
L2_FLUSH *      46C1> 7A2<
L2_INH *        46C1> 7A2<
L2_PD_CPU1 <1..0> 7C5> 7D5> 46A8<> 47D4<
L2_PD_CPU2 <1..0> 7C2> 7D2> 46A8<> 47B4<
L2_WT_ *        7B2> 46C1>
LED_HDD_LIGHT * 53C4
LED_RESET/POWER_GOOD * 53B4
LINE_OUT_RTN    39C3
L_AUX2          42B1> 38A8<
```

```
L_CD            42C5
L_FM            43C1> 38A8<
L_LINE          40D1> 38A8<
L_MIC           41C2> 38A8<
L_MODEM         42B4
L_MOD_OUT       39D2> 42A8<
L_OUT           38A2> 39D8>
MASK_BG1        33B7
MASK_BG2        33A7
MASK_BG3        33A7
MA_A <11..0>    12D2> 14B7< 15B7<
MA_B <11..0>    12D2> 16B7< 17B7<
MCE <7..0> *    11D4> 14C7< 15C7< 16C7< 17C7<
MCP_CPU1A *     10D1> 7C5<
MCP_CPU1B *     10D1> 8B7<
MCP_CPU2A *     10D1> 7C2<
MCP_CPU2B *     10D1> 8A7<
MC_663_BCLK     20B4
MC_664_BCLK     20C4
MC_4403_BCLK    20A4
MC_BCLK_SPARE   20B4
MC_PROC1_BCLK0  20C4
MC_PROC1_BCLK1  20C4
MC_PROC1_BCLK2  20D4
MC_PROC2_BCLK0  20B4
MC_PROC2_BCLK1  20C4
MC_PROC2_BCLK2  20C4
MC_SRAM_BCLK0   20A4
MC_SRAM_BCLK1   20B4
MC_SRAM_BCLK2   20B4
MC_SRAM_BCLK3   20B4
MC_TAG_BCLK     20A4
MD <63..0>      13D6<> 14A7<> 15A7<> 16A7<> 17A7<>
MDP <7..0>      13D6<> 14A7<> 15A7<> 16A7<> 17A7<>
MEM_ACK *       32D6>
MEM_BE <3..0>   11B6 11C6
MEM_DATA_OE *   11B6
MEM_RD_SMPL     11B6
MEM_REQ *       31A7> 32D6<
MEM_WRL_OPEN    11B6
MIDI_IN         44A7> 38A8<
MIDI_OUT        38A2> 44A7>
MIN             41B1> 38A8<
MOUSE_CLK       50A2<> 51B8<
MOUSE_CLK *     51B2> 50B7<
MOUSE_DATA      50A2<> 51B8<
MOUSE_DATA *    50A2<> 51B2>
MPC970_REFSEL   8D4> 20B8<
MPD <31..0>     14D2> 15D2> 16D2> 17D2> 48D8<
MPIC_PCICLK     21C1> 22D7<
MRE <7..0> *    11D4> 14C7< 14D7< 15D7< 16C7< 16D7<
                17D7<
MWE_A0 *        12D2> 14C7< 15C7<
MWE_A1 *        12D2> 14D7< 15D7<
MWE_B0 *        12D2> 16C7< 17C7<
MWE_B1 *        12D2> 16D7< 17D7<
MWS_P2MRXS      11B6
M_OUT           38A2> 40B8<
NVRAM_RD *      46B1> 50C7<
NVRAM_WR *      46B1> 50C7<
OCS_OVRIDE      9C5
OSC24MHZ_O      35D8
OSC970_O        20B7
OSC_14.3181MHZ  32D8
OSC_40MHZ       28C7
PAL_BCLK        20B1> 33A7< 33C7<
```

```
PARALLEL <16..0> 35A1<> 36B7<>
PAR_CONN_GND    36B3
PCIGNT_PAL *    31A7> 33B7<
PCI_AD <31..0>  12A7<> 22C7<> 25C7<> 27B7<> 28D2>
                30C8<> 31B7<> 31C7<> 22D7< 25D7<
                28B8< 30A8<
PCI_AD_OE *     11B6
PCI_AD_ROM <31..0> 27C6
PCI_C/BE <3..0> * 12B2<> 22D7<> 25A7<> 28B2<>
                30B8<> 31B7<>
PCI_DEVSEL *    12B2<> 22D7<> 25A7<> 28B2<> 31B7<>
                30A8<
PCI_ETHNT_GNT * 32D6> 12B8< 30A8<
PCI_ETHNT_REQ * 30A8> 32D6<
PCI_EXT_SEL     11B6
PCI_FRAME *     12B2<> 25A7<> 28B2<> 31B7<> 33B3<>
                22D7< 30B7<
PCI_GNT *       31A7> 33B3> 10C7<
PCI_IDSEL <15..1> 22D6 25D6 28B6 30B7 31B6
PCI_IRDY *      12B2<> 25A7<> 28B2<> 31B7<> 11A5<
                22D7< 30B7< 33B7<
PCI_LOCK *      25A7<> 31B7<> 12B6< 30B7<
PCI_OL_OPEN     11B6
PCI_OUT_SEL     11B6
PCI_PAR         12A7<> 22B7<> 25A7<> 28B2<> 31C7<>
                30B7<
PCI_PERR *      12A2<> 22B7<> 25A7<> 28B2<> 31B7<>
                30A8<
PCI_REQ_664 *   10C1> 31A7<
PCI_SCSI_GNT *  32D6> 12B8< 28B8<
PCI_SCSI_REQ *  28B2> 32D6<
PCI_SERR *      12A2<> 22B7<> 25A7<> 28B2> 31B7<>
                30A8<
PCI_SLOT1_GNT * 32D6> 12B8< 25D7<
PCI_SLOT1_PRESENT * 25D7> 47D8<
PCI_SLOT1_REQ * 25D7> 32D6<
PCI_SLOT2_GNT * 32D6> 12B8< 25D7<
PCI_SLOT2_PRESENT * 25D7> 47D8<
PCI_SLOT2_REQ * 25D7> 32D6<
PCI_STOP *      12B2<> 22D7<> 25A7<> 28B2<> 31B7<>
                30B7< 33B7<
PCI_TRDY *      12B2<> 22D7<> 25A7<> 28B2<> 31B7<>
                11A5< 30B7< 33B7<
PDRQ            35C1> 36C7<
PGD_PLUS5       53B2
PLANAR_ID_RD *  46B1> 47A8<
PLL_EN30        21B6
PLL_ENA30       21B6
PLL_FILTER      21B4
PLL_FOUT0       21B4
PLL_FOUT0A      21C5
PLL_FOUT1       21C5
PLL_FOUT1A      21C5
PLL_FOUT2       21C5
PLL_FOUT2A      21C5
PLL_FOUT3       21C5
PLL_FOUT3A      21C5
PLL_GND         30A5
PLL_PWR         30B5
PLL_X2_HFOUT    21B6
PLUS_12V        45C7
POWER_GOOD/RESET * 53C2> 10D7< 22A7< 25D7< 28C8<
                30D8<
PROC1_BCLK <2..0> 20C1> 7B5<
PROC1_PD_RD *   46B1> 47C4<
PROC2_BCLK <2..0> 20C1> 7B2<
```

```
PROC2_PD_RD *   46B1> 47A4<
PROC_RDY        49B8> 46B8<
PS_POWER_GOOD   52C4
PWR_LED_CNTL *  49B2> 53C8<
PWR_UP_CONF     49B4
P_9VA           45C4> 38C1< 39B8< 39D5< 39D8< 41A5<
                41A6< 41B2< 41B3< 41C5< 41C6< 41D6<
                42B3< 42C3<
P_D             49B2
P_SUPPLY_ON     49B4
P_U             49C2
RESET/POWER_GOOD * 53B5
RESET_SWITCH    53C8
RI1 *           37C7> 35B8<
RI2 *           37A7> 35C8<
ROM_CE *        46B1> 27A7<
ROM_LOAD        10C1> 11A5<
ROM_OE *        10C1> 27C7<
ROM_WE *        10C1> 27C7<
RTC_ALE *       32B1> 46B1> 50C7<
RTC_AS0 *       46B1> 50D7<
RTC_AS1 *       46B1> 50D7<
RTC_CS *        50C5
RTC_RD *        46B8> 50C7<
RTC_SQW_OUT     50C4>
RTC_WR *        46B8> 50C7<
RTS1 *          35B1> 37C7<
RTS2 *          35B1> 37A7<
RUN/HALT_ESP    9C8
RUN/QACK_CPU    46C1> 7B2< 49A2< 52C7<
RWD0            49B8<> 46A8<
RX+             30C4
RX-             30C4
R_AUX2          42C1> 38A8<
R_CD            42B5
R_EX            49C5
R_FM            43C1> 38A8<
R_LINE          40C1> 38A8<
R_MIC           41A2> 38A8<
R_MODEM         42C4
R_MOD_OUT       39D2> 42A8<
R_OUT           38A2> 39A8<
R_PS_POWER_GOOD 52C1> 49B2<
R_RESET_SWITCH  53C7
R_SMI           49B4
SA <19..0>      24B7<> 31D2<> 27A7< 35D8< 38B8<
SCS *           38B2> 43C7<
SCSI_40MHZ      28C6
SCSI_ACK *      29C8
SCSI_ACT *      28A2> 49B8<
SCSI_ATN *      29C8
SCSI_BSY *      29C8
SCSI_BUS_CNTL <8..0> 28C8<> 29D8<>
SCSI_CD *       29C8
SCSI_D <8..0>   28B8<> 29D7<>
SCSI_FUSE_GOOD  29A5> 47D8<
SCSI_IO *       29C8
SCSI_MAC_2VIA   28B3>
SCSI_MSG *      29C8
SCSI_PCICLK     21C1> 28B8<
SCSI_REQ *      29C8
SCSI_RESET *    29C8
SCSI_SEL *      29C8
SD <15..0>      24A7<> 25C1<> 31C1<> 36A2> 38B7<>
                35D1<
SELO            8C5
```

IBM

DATE: 15 DEC 1995	SIZE B	REVISION	DRWNG PART NUMBER MPRZP1SCU-03
POWERPC 604 SMP REFERENCE DESIGN			SHEET 56 OF 64

MOTHERBOARD

```
SEMAPHORE_ST *  46C2>
SER_CLK         46A1> 47A4<
SER_CLK_EN      46A1> 47A4<
SHD *           6D2<> 10C1>
SIN1            37C7> 35B8<
SIN2            37A7> 35B8<
SINT            38B2> 43A3>
SIO_NMI         32B8> 12B6<
SIO_PCICLK      21C1> 31C7<
SLOT1_PCICLK    21C1> 25C7<
SLOT2_PCICLK    21C1> 25C7<
SMI             49B3
SMI_CPU *       49B2> 7D2<
SOUT1 *         35B1> 37C7<
SOUT2 *         35B1> 37A7<
SP_DATA1        40A4
SP_DATA2        40A3
SRAM_ADS/ADDR0 * 10B1> 19C6<
SRAM_ALE        10B1> 19C6<
SRAM_BCLK <3..0> 20B1> 19D6<
SRAM_CNT_EN/ADDR1 * 10B1> 19C6<
SRAM_OE *       10B1> 19C6< 33A7<
SRAM_PD <3..0>  19B6> 46A8<> 47A4<
SRAM_WE *       10B1> 19C6<
SRESET          32C3
SRESET_CPU1A *  9C1> 7D5<
SRESET_CPU1B *  9B1> 8B7<
SRESET_CPU2A *  9B1> 7D2<
SRESET_CPU2B *  9B1> 8A7<
SRESET_ESP *    9C4
SRESET_SIO *    32C1> 9C4<
SUPERIO_DRV2 *  35C6
SUPERIO_TC      35C6
SUSACK *        31A7> 10D7< 46A8<
SUSREQ_KS *     46A1> 31A7<
SUSSTAT *       32B3
SWITCH          49C4
TA *            10C1<> 5D2< 33A7<
TAG_BCLK        20A1> 19D3<
TAG_CLEAR *     7A2> 10B1> 19C6<
TAG_MATCH       19C6> 10B7<
TAG_VALID       10B1> 19C6<
TAG_WE *        10B1> 19C6<
TBEN_CPU        7B5
TBST *          6A2> 10C8<>
TCK_CPU         9A3> 7C2<
TDI_CPU1        9A5> 7C5<
TDI_CPU2        9A5> 7C2<
TDI_ESP         9A4
TDO_CPU1        7C5> 9A3>
TDO_CPU2        7C2> 9A3>
TDO_ESP         9A4
TEA *           10D1> 5D2<
TERM_PWR        29C5
TIMER2_OUT      32B8> 40A8<
TMS_CPU         9B3> 7C2<
TPI_GND         30B5
TPI_PWR         30B5
TRST_CPU1 *     9C2> 7C5<
TRST_CPU2 *     9C2> 7C2<
TS *            6C2<> 10C8<>
TSIZ <2..0>     6A2> 10C8<>
TT <4..0>       6A2<> 10C8<>
TTL_CLK         20C6
TX+             30D4
TX-             30D4
```

```
UCS5601_DISC    29B4
UCS5601_REG     29B3
UNFREEZE *      49B2> 46A8<
VBAT            49D5> 50D7<
VBATR           49D5> 49A8<
VBB             41A1> 39A8< 39D6< 41A5< 41B3< 41C5<
                42C4<
WT *            6A4
X1_ETHNT        30D5
X2FOUT          21B5
X2_ETHNT        30D5
XA <7..0>       31D1> 46C8< 48B8< 50A7<
XATS *          6C2<> 10C7<
XCTL0           38B2> 40B8<
XD <7..0>       27A2<> 31C1> 46B8<> 47D4<> 48A1<>
                50C2<> 49B8<
XDEN *          32C1> 31B3<
XDIR            32C1> 31B3<
XILINX_PROG_DONE 23C8> 47D8<
XIOR *          34B4> 46B8< 50A7<
XIOW *          34B4> 46B8< 50A7<
XTAL1I_24.576MHZ 38D6
XTAL1O_24.576MHZ 38D6
XTAL1_12MHZ     50B5
XTAL1_32.768KHZ 50C6
XTAL1_MPC970    20C7
XTAL2I_16.934MHZ 38C7
XTAL2O_16.934MHZ 38C7
XTAL2_12MHZ     50A5
XTAL2_32.768KHZ 50B4
XTAL2_MPC970    20C6
XTALI_33.8688MHZ 43C6
XTALO_33.8688MHZ 43B6
```

IBM

DATE: 15 DEC 1995	SIZE B	REVISION	DRWNG PART NUMBER MPRZP1SCU-03
POWERPC 604 SMP REFERENCE DESIGN			SHEET 57 OF 64

MOTHERBOARD

*** Unit Cross-Reference ***
--- for the entire design --

C1	CAPACITOR	20C6
C2	ELCAP	49A7
C3	CAPACITOR	52C3
C4	CAPACITOR	8C3
C5	CAPACITOR	9C8
C6	CAPACITOR	8C3
C7	CAPACITOR	9C2
C8	CAPACITOR	38D8
C9	CAPACITOR	8C3
C10	CAPACITOR	38D8
C11	CAPACITOR	51A5
C12	CAPACITOR	8C1
C13	CAPACITOR	8A3
C14	CAPACITOR	8A1
C15	CAPACITOR	9D3
C16	CAPACITOR	8B3
C17	CAPACITOR	8C3
C18	CAPACITOR	8B3
C19	CAPACITOR	8C3
C20	CAPACITOR	8B3
C21	CAPACITOR	8B1
C22	CAPACITOR	8C1
C23	CAPACITOR	8C3
C24	CAPACITOR	8B1
C25	CAPACITOR	8C1
C26	CAPACITOR	8B1
C27	CAPACITOR	8C1
C28	CAPACITOR	8C1
C29	CAPACITOR	8C1
C30	ELCAP	8B3
C31	ELCAP	8A3
C32	CAPACITOR	20D7
C33	CAPACITOR	51C5
C34	CAPACITOR	20D7
C36	CAPACITOR	41C4
C37	CAPACITOR	52D2
C38	CAPACITOR	20D7
C39	CAPACITOR	23A5
C40	CAPACITOR	51D6
C41	CAPACITOR	51C6
C43	CAPACITOR	44B4
C44	CAPACITOR	50D3
C45	CAPACITOR	46A8
C46	CAPACITOR	23A5
C47	CAPACITOR	40D3
C48	CAPACITOR	41C5
C49	CAPACITOR	44B4
C50	CAPACITOR	51A7
C51	CAPACITOR	51A2
C52	CAPACITOR	54D3
C53	CAPACITOR	54D3
C54	CAPACITOR	51A5
C55	CAPACITOR	20D6
C56	CAPACITOR	26D2
C57	CAPACITOR	26A7
C58	CAPACITOR	30A5
C59	CAPACITOR	30D4
C60	CAPACITOR	42C2
C61	CAPACITOR	49A6
C62	CAPACITOR	20C8
C63	CAPACITOR	23A5
C64	CAPACITOR	26A7
C65	CAPACITOR	30D4
C66	CAPACITOR	40C4
C67	CAPACITOR	41A3
C68	CAPACITOR	42B5
C69	CAPACITOR	42A4
C70	CAPACITOR	50D2
C71	CAPACITOR	52D1
C72	CAPACITOR	26A7
C73	CAPACITOR	40C7
C74	CAPACITOR	41B2
C75	CAPACITOR	42B5
C76	CAPACITOR	44C5
C77	CAPACITOR	44C2
C78	CAPACITOR	51A5
C79	CAPACITOR	51C2
C80	CAPACITOR	54D7
C81	CAPACITOR	54D1
C82	CAPACITOR	26A6
C83	CAPACITOR	30D2
C84	CAPACITOR	40C7
C85	CAPACITOR	42A2
C86	CAPACITOR	42C5
C87	CAPACITOR	44C6
C88	CAPACITOR	50D2
C89	CAPACITOR	26A8
C90	CAPACITOR	26A6
C91	CAPACITOR	30C2
C92	CAPACITOR	30B5
C93	CAPACITOR	39B6
C94	CAPACITOR	40C3
C95	CAPACITOR	42B3
C96	CAPACITOR	44C6
C97	CAPACITOR	52D1
C98	CAPACITOR	50D2
C99	CAPACITOR	26A8
C100	CAPACITOR	26A8
C101	CAPACITOR	50A6
C102	CAPACITOR	33D8
C103	CAPACITOR	36B5
C104	CAPACITOR	36B4
C105	CAPACITOR	38C4
C106	CAPACITOR	39C3
C107	CAPACITOR	42B3
C108	CAPACITOR	44B4
C109	CAPACITOR	44C6
C110	CAPACITOR	53D6
C111	CAPACITOR	54D1
C112	CAPACITOR	26A7
C113	CAPACITOR	26A8
C114	CAPACITOR	30C4
C115	CAPACITOR	30C4
C116	CAPACITOR	36B3
C117	CAPACITOR	36B4
C118	CAPACITOR	36B4
C119	CAPACITOR	37B2
C120	CAPACITOR	37D1
C121	CAPACITOR	38C3
C122	CAPACITOR	39C3
C123	CAPACITOR	42C3
C124	CAPACITOR	44B4
C125	CAPACITOR	18C6
C126	CAPACITOR	50D1
C127	CAPACITOR	50A6
C128	CAPACITOR	51A4
C129	CAPACITOR	26A7
C131	CAPACITOR	36B4
C132	CAPACITOR	36B4
C133	CAPACITOR	37D1
C134	CAPACITOR	38D4
C135	CAPACITOR	40C3
C136	CAPACITOR	42B6
C137	CAPACITOR	42A4
C138	CAPACITOR	44A4
C139	CAPACITOR	54D3
C140	CAPACITOR	49D3
C141	ELCAP	52A6
C142	CAPACITOR	26A7
C143	CAPACITOR	36B4
C144	CAPACITOR	37B1
C145	ELCAP	43C2
C146	CAPACITOR	38D5
C147	CAPACITOR	41A8
C148	CAPACITOR	42A5
C149	CAPACITOR	44A5
C150	CAPACITOR	54D2
C151	CAPACITOR	49A3
C152	CAPACITOR	54D2
C153	CAPACITOR	33D8
C154	CAPACITOR	36B4
C155	CAPACITOR	37C2
C156	CAPACITOR	38D5
C157	CAPACITOR	41A8
C158	CAPACITOR	42A4
C159	CAPACITOR	18C7
C160	CAPACITOR	18D6
C161	CAPACITOR	36B4
C162	CAPACITOR	36B4
C163	CAPACITOR	38A4
C164	CAPACITOR	38D4
C165	CAPACITOR	39B3
C166	CAPACITOR	47A8
C167	CAPACITOR	49C2
C168	CAPACITOR	50D2
C169	CAPACITOR	52D2
C170	CAPACITOR	36B4
C171	CAPACITOR	36B4
C172	CAPACITOR	37A1
C173	ELCAP	43B5
C174	CAPACITOR	18C7
C175	CAPACITOR	38D4
C176	CAPACITOR	39A3
C177	CAPACITOR	47A8
C178	CAPACITOR	18D6
C179	ELCAP	49A3
C180	CAPACITOR	52D1
C181	CAPACITOR	36B4
C182	CAPACITOR	36B5
C183	CAPACITOR	37A1
C184	CAPACITOR	38A4
C185	CAPACITOR	38C6
C186	ELCAP	38A3
C187	CAPACITOR	39A1
C188	CAPACITOR	36B4
C189	CAPACITOR	36B5
C190	CAPACITOR	38A4
C191	CAPACITOR	38C6
C192	CAPACITOR	39C2
C193	CAPACITOR	18C7
C194	CAPACITOR	18D6
C195	CAPACITOR	50D5
C196	CAPACITOR	54D8
C197	CAPACITOR	54D8
C198	CAPACITOR	18C6
C199	CAPACITOR	36B4
C200	CAPACITOR	37B1
C201	CAPACITOR	38C6
C202	CAPACITOR	38A3
C203	CAPACITOR	39A2
C204	CAPACITOR	18D6
C205	CAPACITOR	54D7
C206	CAPACITOR	54D7
C207	CAPACITOR	18C6
C208	CAPACITOR	37A1
C209	CAPACITOR	38A3
C210	CAPACITOR	39C1
C211	CAPACITOR	18D6
C212	CAPACITOR	38C3
C213	CAPACITOR	49C8
C214	ELCAP	8B3
C215	ELCAP	8B3
C216	ELCAP	8B3
C217	ELCAP	8B3
C218	ELCAP	26B7
C219	ELCAP	26A7
C220	ELCAP	8A1
C221	ELCAP	8A3
C222	ELCAP	8B1
C223	ELCAP	8B1
C224	ELCAP	8A1
C225	ELCAP	8B1
C226	ELCAP	8B1
C227	ELCAP	8B1
C228	CAPACITOR	20D6
C229	CAPACITOR	30A4
C230	CAPACITOR	20D6
C231	CAPACITOR	30A4
C232	CAPACITOR	13B7
C233	CAPACITOR	21B6
C234	CAPACITOR	21B4
C235	CAPACITOR	30A4
C236	CAPACITOR	13B6
C237	CAPACITOR	20D7
C238	CAPACITOR	30A4
C239	CAPACITOR	13B6
C240	CAPACITOR	20D6
C241	CAPACITOR	20B3
C242	CAPACITOR	21B4
C243	CAPACITOR	30A4
C244	CAPACITOR	54A8
C245	CAPACITOR	52A8
C246	CAPACITOR	13B6
C247	CAPACITOR	14B2
C248	CAPACITOR	20B3
C249	CAPACITOR	30A5
C250	CAPACITOR	40A4
C251	CAPACITOR	54D2
C252	CAPACITOR	13B6
C253	CAPACITOR	14B2
C254	CAPACITOR	15B2
C255	CAPACITOR	20B3
C256	CAPACITOR	20A3
C257	CAPACITOR	30A5
C258	CAPACITOR	31D8
C260	CAPACITOR	18C6
C261	CAPACITOR	15B2
C262	CAPACITOR	16B2
C263	CAPACITOR	18D7
C264	CAPACITOR	20B3
C265	CAPACITOR	20A3

IBM

DATE: 15 DEC 1995	SIZE B	REVISION	DRWNG PART NUMBER MPRZP1SCU-03
POWERPC 604 SMP REFERENCE DESIGN			SHEET 58 OF 64

MOTHERBOARD

C266	CAPACITOR	21C4
C267	CAPACITOR	25A1
C268	CAPACITOR	30A4
C269	CAPACITOR	31C2
C271	CAPACITOR	40A7
C272	CAPACITOR	18C6
C273	CAPACITOR	13B6
C274	CAPACITOR	14B2
C275	CAPACITOR	14C2
C276	CAPACITOR	16B2
C277	CAPACITOR	17B2
C278	CAPACITOR	20A3
C279	CAPACITOR	20C3
C280	CAPACITOR	30A4
C281	CAPACITOR	32C3
C282	CAPACITOR	36C2
C283	CAPACITOR	18D7
C284	CAPACITOR	49A4
C285	CAPACITOR	49C6
C286	CAPACITOR	13A6
C287	CAPACITOR	13B7
C288	CAPACITOR	14B2
C289	CAPACITOR	14C2
C290	CAPACITOR	15B2
C291	CAPACITOR	15C2
C292	CAPACITOR	17B2
C293	CAPACITOR	20C3
C294	CAPACITOR	20B3
C296	CAPACITOR	25A1
C297	CAPACITOR	41D4
C298	CAPACITOR	41A4
C299	CAPACITOR	41B1
C300	CAPACITOR	49C8
C301	CAPACITOR	13A6
C302	CAPACITOR	13B7
C303	CAPACITOR	14C2
C304	CAPACITOR	15B2
C305	CAPACITOR	15C2
C306	CAPACITOR	16B2
C307	CAPACITOR	16C2
C308	CAPACITOR	18D7
C309	CAPACITOR	20A3
C310	CAPACITOR	20C3
C311	CAPACITOR	21C5
C312	CAPACITOR	41B5
C313	CAPACITOR	13A7
C314	CAPACITOR	15C2
C315	CAPACITOR	16B2
C316	CAPACITOR	16C2
C317	CAPACITOR	17B2
C318	CAPACITOR	17C2
C319	CAPACITOR	20B3
C320	CAPACITOR	20C3
C321	CAPACITOR	21C4
C322	CAPACITOR	27A1
C323	CAPACITOR	32A4
C324	CAPACITOR	36B2
C325	CAPACITOR	39C3
C326	CAPACITOR	41C3
C327	ELCAP	38A4
C328	CAPACITOR	44A1
C329	CAPACITOR	13A7
C330	CAPACITOR	14C2
C331	CAPACITOR	16C2
C332	CAPACITOR	17B2
C333	CAPACITOR	17C2

C334	CAPACITOR	49A3
C335	CAPACITOR	20C3
C336	CAPACITOR	29C1
C337	CAPACITOR	32A4
C338	CAPACITOR	35A8
C339	CAPACITOR	37B6
C340	CAPACITOR	39D2
C341	CAPACITOR	39A8
C342	CAPACITOR	40B5
C343	CAPACITOR	40B7
C344	CAPACITOR	41D6
C345	CAPACITOR	41C3
C346	CAPACITOR	49C6
C347	CAPACITOR	13A7
C348	CAPACITOR	15C2
C349	CAPACITOR	17C2
C350	CAPACITOR	53C7
C351	CAPACITOR	20C7
C352	CAPACITOR	29C1
C353	CAPACITOR	29C1
C354	CAPACITOR	32A4
C355	CAPACITOR	37B1
C356	CAPACITOR	37B5
C357	CAPACITOR	39D7
C358	CAPACITOR	40C7
C359	CAPACITOR	41A8
C360	ELCAP	41A1
C361	CAPACITOR	52D5
C362	CAPACITOR	16C2
C363	CAPACITOR	27A1
C364	CAPACITOR	29D1
C365	CAPACITOR	29C1
C366	CAPACITOR	29A3
C367	CAPACITOR	31A3
C368	CAPACITOR	32A5
C369	CAPACITOR	37C1
C370	CAPACITOR	37A4
C371	CAPACITOR	37A3
C372	ELCAP	38D3
C373	CAPACITOR	40A6
C374	CAPACITOR	40B5
C375	CAPACITOR	41A4
C376	CAPACITOR	41B3
C377	CAPACITOR	45C7
C378	CAPACITOR	45C4
C379	CAPACITOR	13A6
C380	CAPACITOR	17C2
C381	CAPACITOR	29D1
C382	CAPACITOR	29C1
C383	CAPACITOR	29B5
C384	CAPACITOR	31D8
C385	CAPACITOR	32A5
C386	CAPACITOR	37A4
C387	CAPACITOR	37A4
C388	CAPACITOR	37B4
C389	CAPACITOR	38C8
C390	CAPACITOR	39B7
C391	CAPACITOR	39A4
C392	ELCAP	39A6
C394	CAPACITOR	13A6
C395	CAPACITOR	53D6
C396	CAPACITOR	29D1
C397	CAPACITOR	29C1
C398	CAPACITOR	29A8
C399	CAPACITOR	31D8
C400	CAPACITOR	32A5

C401	CAPACITOR	35A7
C402	CAPACITOR	37B4
C403	CAPACITOR	37A4
C404	CAPACITOR	38C8
C405	CAPACITOR	39A5
C406	CAPACITOR	41A6
C407	CAPACITOR	41A5
C408	CAPACITOR	46A8
C410	CAPACITOR	13A6
C411	CAPACITOR	27A1
C412	CAPACITOR	29D1
C413	CAPACITOR	29C1
C414	CAPACITOR	31D7
C415	CAPACITOR	32A5
C416	CAPACITOR	37A4
C417	CAPACITOR	37A4
C418	CAPACITOR	37B4
C419	CAPACITOR	39D7
C420	CAPACITOR	39D6
C421	CAPACITOR	39B5
C422	CAPACITOR	41A4
C423	CAPACITOR	29D1
C424	CAPACITOR	29C1
C425	CAPACITOR	29B3
C426	CAPACITOR	31D1
C427	CAPACITOR	32A5
C428	CAPACITOR	39B3
C429	CAPACITOR	46A8
C430	CAPACITOR	52D7
C431	CAPACITOR	29D1
C432	CAPACITOR	29D1
C433	CAPACITOR	29A5
C434	CAPACITOR	35A8
C435	CAPACITOR	37B6
C436	CAPACITOR	37B4
C437	CAPACITOR	39A5
C438	CAPACITOR	46A8
C439	CAPACITOR	29C1
C440	CAPACITOR	29D1
C441	CAPACITOR	29C2
C442	CAPACITOR	37A5
C443	CAPACITOR	39A3
C444	CAPACITOR	39A1
C445	CAPACITOR	29C1
C446	CAPACITOR	29A3
C447	CAPACITOR	29A2
C448	CAPACITOR	29A8
C449	CAPACITOR	37B3
C450	CAPACITOR	39C1
C451	CAPACITOR	39A4
C452	CAPACITOR	39C6
C453	ELCAP	26B7
C454	ELCAP	26B7
C455	ELCAP	26B6
C456	CAPACITOR	52D5
C457	ELCAP	26B6
C458	CAPACITOR	48C8
C459	ELCAP	23A6
C460	ELCAP	26B7
C461	CAPACITOR	52D6
C462	CAPACITOR	38C6
C463	ELCAP	26B7
C464	CAPACITOR	48C7
C465	CAPACITOR	53B2
C466	ELCAP	20D6
C467	CAPACITOR	43C2

C468	CAPACITOR	43C2
C469	ELCAP	30B5
C470	ELCAP	30A5
C471	CAPACITOR	52D6
C472	ELCAP	37A2
C473	ELCAP	38C3
C474	ELCAP	37A2
C475	ELCAP	13B6
C476	ELCAP	27A2
C477	ELCAP	13B5
C478	ELCAP	46A7
C479	ELCAP	13A5
C480	CAPACITOR	8A5
C481	CAPACITOR	48C8
C482	ELCAP	13A5
C483	ELCAP	14B2
C484	ELCAP	31D8
C485	ELCAP	13A6
C486	ELCAP	15B2
C487	ELCAP	31D8
C488	ELCAP	16B2
C489	ELCAP	17B2
C490	ELCAP	35A8
C491	ELCAP	14B2
C492	ELCAP	29B3
C493	ELCAP	15B2
C494	ELCAP	14B2
C495	ELCAP	16B2
C496	ELCAP	15B2
C497	ELCAP	17B2
C498	ELCAP	29A5
C499	ELCAP	14B2
C500	ELCAP	16B2
C501	ELCAP	29A7
C502	ELCAP	15B2
C503	ELCAP	17B2
C504	ELCAP	16B2
C505	ELCAP	17B2
C506	CAPACITOR	53B2
C507	CAPACITOR	53D5
C508	CAPACITOR	48C7
C509	CAPACITOR	53D5
C510	ELCAP	52D4
C511	ELCAP	52D4
C512	ELCAP	52D3
C513	ELCAP	52D3
C514	ELCAP	18C7
C515	ELCAP	52D3
C516	ELCAP	53D6
C517	ELCAP	18C7
C518	ELCAP	50D3
C519	ELCAP	18C8
C520	ELCAP	18D7
C521	ELCAP	18D7
C522	ELCAP	18D8
C523	ELCAP	48C8
C524	ELCAP	41A4
C525	ELCAP	39D6
C526	CAPACITOR	8B5
C527	CAPACITOR	8C5
C528	CAPACITOR	8C7
C529	CAPACITOR	8A5
C530	CAPACITOR	8A5
C531	CAPACITOR	8A5
C532	CAPACITOR	8B5
C533	CAPACITOR	8B5

IBM

DATE: 15 DEC 1995	SIZE B	REVISION	DRWNG PART NUMBER MPRZP1SCU-03
POWERPC 604 SMP REFERENCE DESIGN			SHEET 59 OF 64

MOTHERBOARD

```
C534  CAPACITOR 8A5
C535  ELCAP     8B5
C536  ELCAP     8A5
C537  CAPACITOR 12D8
C538  CAPACITOR 36D8
C539  CAPACITOR 33D7
C540  CAPACITOR 35C8
C541  CAPACITOR 34B4
C542  CAPACITOR 47A8
C543  CAPACITOR 47A8
C544  CAPACITOR 47A8
C545  CAPACITOR 20D4
C546  CAPACITOR 20D4
C547  CAPACITOR 20D4
C548  CAPACITOR 20D3
C549  CAPACITOR 20D3
C550  CAPACITOR 21D8
C551  CAPACITOR 21D7
C552  CAPACITOR 21D7
C553  CAPACITOR 21D7
C554  CAPACITOR 21D7
C555  CAPACITOR 46A8
C556  CAPACITOR 46A7
C557  CAPACITOR 46A7
C558  ELCAP     28A8
C559  CAPACITOR 28A8
C560  CAPACITOR 28A8
C561  CAPACITOR 28A7
C562  CAPACITOR 28A7
C563  CAPACITOR 26D2
C564  CAPACITOR 28A7
C565  CAPACITOR 36C7
C566  CAPACITOR 28A7
C567  CAPACITOR 28C7
C568  CAPACITOR 28A7
C569  CAPACITOR 28A7
C570  CAPACITOR 28A7
C571  CAPACITOR 28A6
C572  ELCAP     45C6
C573  CAPACITOR 45C6
C574  CAPACITOR 52A8
C575  CAPACITOR 30D2
C576  CAPACITOR 30D2
C577  CAPACITOR 49D3
C578  CAPACITOR 29B1
C579  CAPACITOR 29B1
C580  CAPACITOR 49B1
C581  CAPACITOR 23A5
C582  CAPACITOR 23A4
C583  CAPACITOR 23A4
C584  CAPACITOR 23A4
C585  CAPACITOR 23A4
C586  CAPACITOR 23A3
C587  CAPACITOR 26D2
C592  CAPACITOR 54A8
C593  CAPACITOR 54A8
C594  CAPACITOR 54A8
C595  CAPACITOR 54A8
C596  CAPACITOR 54A8
C597  CAPACITOR 12D8
C598  CAPACITOR 36D8
C599  CAPACITOR 12D8
C600  CAPACITOR 12D8
C601  CAPACITOR 52C8
C602  CAPACITOR 36A4
C603  CAPACITOR 30B2
```

```
C604  CAPACITOR 23A3
C605  CAPACITOR 23A3
C606  CAPACITOR 54A7
C607  CAPACITOR 54A7
C608  CAPACITOR 54A7
C609  CAPACITOR 54A7
C610  CAPACITOR 54A7
C611  CAPACITOR 54A7
C612  CAPACITOR 34B4
C613  CAPACITOR 26D2
C614  CAPACITOR 52A3
C615  CAPACITOR 52A3
C616  CAPACITOR 52A3
C617  CAPACITOR 52A3
C618  CAPACITOR 52A3
C619  CAPACITOR 52A3
C620  ELCAP     52A4
C621  ELCAP     52A4
C622  ELCAP     52A4
C623  ELCAP     52A4
C624  ELCAP     52A4
C625  ELCAP     52A4
C626  ELCAP     27C2
C627  CAPACITOR 27C2
C628  CAPACITOR 27C2
C629  CAPACITOR 27C2
C704  CAPACITOR 43C2
C706  CAPACITOR 43B7
C707  CAPACITOR 43B6
C709  CAPACITOR 43B2 43C2
C712  CAPACITOR 43B5 43B6
C713  CAPACITOR 43B5
C714  CAPACITOR 43B5
C715  CAPACITOR 20D5
C716  CAPACITOR 20D4
C811  CAPACITOR 45A8
C812  CAPACITOR 45A8
C813  CAPACITOR 45A8
C814  CAPACITOR 11A5
CR1   1N5817    29A6
CR2   LED_A     30B3
CR3   MMBD914LT1 53D7
CR4   SER_DIODE 41A3
CR5   SER_DIODE 41D3
CR6   MMBD914LT1 45C6
CR7   SER_DIODE 39C4
CR8   SER_DIODE 41C2
CR9   SER_DIODE 41D5
CR10  SER_DIODE 41A5
CR11  SER_DIODE 40D2
CR12  SER_DIODE 40B2
CR13  SER_DIODE 41B4
CR14  SER_DIODE 39A4
CR15  SER_DIODE 39B4
CR16  SER_DIODE 39C4
CR17  ZENER     49C4
CR18  MMBD914LT1 49C3
CR19  SFPB54VL  49D7
CR20  SFPB54VL  49D6
CR21  SFPB54VL  49C6
CR22  MMBD914LT1 36C7
CR23  SFPB54VL  49D6
F1    POLYSWITCH 51D6
F2    POLYSWITCH 29A6
F3    POLYSWITCH 44D3
J0    CONN_SIMM72 14D5
```

```
J1    CONN_SIMM72 14D4
J2    CONN_SIMM72 15D5
J3    CONN_SIMM72 15D4
J4    CONN_SIMM72 16D5
J5    CONN_SIMM72 16D4
J6    CONN_SIMM72 17D5
J7    CONN_SIMM72 17D3
J8    CONNCPU256 5D6 6D7 7D6 8C4
J9    CONNCPU256 5D4 6D5 7D3 8C2
J10   CONN_MDIN6 51B3
J11   CONN_MDIN6 51D3
J12   CONN_L2   18D4 19D4
J13   CONNPOWER6 52C4
J14   CONN_PCI2X120 24D4 25C2 25D5 26D4
J15   CONN_BERG2X12 8B6
J16   CONN_BERG2X12 8A6
J17   CONN_BERG1X2 8C6
J18   CONN_ESP  9C6
J19   CONNSCSI50X 29D1
J20   CONN_BERG1X3 49D2
J21   RJ45S     30D1
J22   CDROM_CONN 42C8
J23   CONN_BERG1X2 49C2
J25   CONN_PARALLEL25 36C2
J26   CONN_SERIAL 37D2
J27   CONNSER9I 37B2
J28   CONN_BERG1X3 49B1
J29   POWER1X3  49C2
J30   CONN_BERG1X3 21B4
J31   CONN_BERG1X2 40B2
J32   CONNSCSI50I 29D5
J33   CONN_BERG2X8 44D3
J34   CONN_BERG1X3 52D6
J35   CONN_BERG1X3 32C1
J36   CONN_BERG1X3 52D7
J37   CONN_BERG1X3 52D4
J38   CONN_BERG1X2 53C8
J39   CONN_BERG1X2 40A3
J40   HSJ1453   40D8
J41   CONN_BERG1X2 53B2
J42   CONN_FLOPPY34 36B7
J43   CONN_BERG1X3 52D5
J44   CONN_BERG1X2 53C2
J45   CONN_BERG1X3 52D6
J46   HSJ1453   41B8
J47   HSJ1453   39C1
J48   HSJ1453   39B1
J49   2X4BERG   42A6
J50   CONN33POWER6 26D1
J51   CONN3-3POWER 52A4
J81   CONN_BERG2X3 9A4
L1    FERITE    29A4
L2    FERITE    51D5
L3    FERITE    30C2
L4    FERITE    30C2
L5    FERITE    51A5
L6    FERITE    30D2
L7    FERITE    30D2
L8    FERITE    44D4
L9    INDUCTOR  29C8
L10   INDUCTOR  29B7
L11   FERITE    44D2
L12   FERITE    42B7
L13   INDUCTOR  29D7
L14   FERITE    44A3
L15   INDUCTOR  29D7
```

```
L16   FERITE    44A3
L17   INDUCTOR  29D7
L18   INDUCTOR  29C8
L19   INDUCTOR  29D7
L20   INDUCTOR  29C8
L21   INDUCTOR  29D7
L22   INDUCTOR  29C8
L23   INDUCTOR  29D7
L24   INDUCTOR  29C8
L25   INDUCTOR  29D7
L26   INDUCTOR  29C8
L27   FERITE    38D3
L28   INDUCTOR  29D7
L29   INDUCTOR  29C8
L30   INDUCTOR  29D7
L31   INDUCTOR  29C8
L32   INDUCTOR  29C8
L33   CHOKE3    40D5
L34   CHOKE3    41B6
L35   CHOKE3    39C3
L36   CHOKE3    39B3
L37   FERITE    21C4
L38   FERITE    37C2
L39   FERITE    29A4
L40   FERITE    29C3
L41   FERITE    29C3
L42   FERITE    37B2
L43   FERITE    36B4
L44   INDUCTOR  38D2
L45   FERITE    20D4
L46   FERITE    20D4
L47   FERITE    41B7
L48   FERITE    41B7
L49   FERITE    41B7
L50   FERITE    40D6
L51   FERITE    40D6
L52   FERITE    40C6
L53   FERITE    39C2
L54   FERITE    39C2
L55   FERITE    39C2
L56   FERITE    39B2
L57   FERITE    39B2
L58   FERITE    39B2
M1    87C750    49C4
M2    PAL16L8   9C2
M3    PAL16L8   9D3
M4    XC17000   23B6
M5    XC17000   23B5
M6    CONN_BATTERY 49D8
M8    PAL20L8   8D5
M9    PLCC32ROMSKT 27B4
M10   DIP4      20C7
M11   PALCE16V8 33D5
M12   PAL22V10  33C5
M13   KEYSTONE  46D4
M14   PLCC32ROMSKT 27D4
M16   ST93CS46  30B2
M18   PALCE16V8 33A5
Q1    IRFZ44    52B7
Q3    2N7002    49A6
Q4    2N7002    49A6
Q5    2N7002    49C2
Q6    IRFR014   52C7
R1    RESISTOR  5D3
R2    RESISTOR  23C3
R3    RESISTOR  23C3
```

IBM

DATE: 15 DEC 1995	SIZE B	REVISION	DRWNG PART NUMBER MPRZP1SCU-03
POWERPC 604 SMP REFERENCE DESIGN			SHEET 60 OF 64

MOTHERBOARD

R4	RESISTOR	23B3
R5	RESISTOR	23B3
R6	RESISTOR	30C5
R7	RESISTOR	7D4
R8	RESISTOR	7B8
R9	RESISTOR	23B3
R10	RESISTOR	30C5
R11	RESISTOR	7C8
R12	RESISTOR	7D7
R13	RESISTOR	30C5
R14	RESISTOR	47B8
R15	RESISTOR	6D4
R16	RESISTOR	6B4
R17	RESISTOR	7C8
R18	RESISTOR	33A6
R19	RESISTOR	7D7
R20	RESISTOR	7A4
R21	RESISTOR	47C8
R22	RESISTOR	5C3
R23	RESISTOR	6D4
R24	RESISTOR	6D3
R25	RESISTOR	7C8
R26	RESISTOR	7A5
R27	RESISTOR	7B8
R28	RESISTOR	7A8
R29	RESISTOR	9B5
R30	RESISTOR	5A6
R31	RESISTOR	6D4
R32	RESISTOR	6D3
R33	RESISTOR	7A5
R34	RESISTOR	7B5
R35	RESISTOR	7B6
R36	RESISTOR	9B4
R37	RESISTOR	47B8
R38	RESISTOR	5A6
R39	RESISTOR	6D3
R40	RESISTOR	7B3
R41	RESISTOR	7A5
R42	RESISTOR	7B6
R43	RESISTOR	9B4
R44	RESISTOR	47B7
R45	RESISTOR	5A6
R46	RESISTOR	7B3
R47	RESISTOR	7A5
R48	RESISTOR	7C8
R49	RESISTOR	9D4
R50	RESISTOR	44A5
R51	RESISTOR	47B7
R52	RESISTOR	5B5
R53	RESISTOR	6D3
R54	RESISTOR	6B3
R55	RESISTOR	7A3
R56	RESISTOR	7B4
R57	RESISTOR	9C3
R58	RESISTOR	9C3
R59	RESISTOR	47B7
R60	RESISTOR	49A6
R61	RESISTOR	5B5
R62	RESISTOR	6D3
R63	RESISTOR	6B3
R64	RESISTOR	7B8
R65	RESISTOR	30A7
R66	RESISTOR	7A8
R67	RESISTOR	7B4
R68	RESISTOR	9D4
R69	RESISTOR	9C3

R70	RESISTOR	47B7
R71	RESISTOR	49A6
R72	RESISTOR	5D3
R73	RESISTOR	5B5
R74	RESISTOR	6A4
R75	RESISTOR	6B3
R76	RESISTOR	7A8
R77	RESISTOR	9D4
R78	RESISTOR	9C3
R79	RESISTOR	47B7
R80	RESISTOR	49A6
R81	RESISTOR	5D3
R82	RESISTOR	5B5
R83	RESISTOR	7A4
R84	RESISTOR	9D4
R85	RESISTOR	9C3
R86	RESISTOR	7D4
R87	RESISTOR	9D4
R88	RESISTOR	9C3
R89	RESISTOR	5A6
R90	RESISTOR	9D5
R91	RESISTOR	9C3
R92	RESISTOR	9D5
R93	RESISTOR	9C3
R94	RESISTOR	9D5
R95	RESISTOR	9C3
R96	RESISTOR	9C3
R97	RESISTOR	20C4
R98	RESISTOR	30C5
R99	RESISTOR	11C6
R100	RESISTOR	30C4
R101	RESISTOR	11C6
R102	RESISTOR	11C6
R103	RESISTOR	20C4
R104	RESISTOR	11C6
R105	RESISTOR	11C8
R106	RESISTOR	11C6
R107	RESISTOR	22B4
R108	RESISTOR	41C3
R109	RESISTOR	51B6
R110	RESISTOR	52C3
R111	RESISTOR	6A4
R112	RESISTOR	11C6
R113	RESISTOR	22D6
R114	RESISTOR	22B4
R115	RESISTOR	41C6
R116	RESISTOR	42C4
R117	RESISTOR	11C6
R118	RESISTOR	20C4
R119	RESISTOR	22B4
R120	RESISTOR	42C4
R121	RESISTOR	44B4
R122	RESISTOR	52C4
R123	RESISTOR	6C6
R124	RESISTOR	6A4
R125	RESISTOR	11D6
R126	RESISTOR	20C4
R127	RESISTOR	20C4
R128	RESISTOR	22B4
R129	RESISTOR	40C3
R130	RESISTOR	41A6
R131	RESISTOR	42B3
R132	RESISTOR	42B6
R133	RESISTOR	44B4
R134	RESISTOR	44C4
R135	RESISTOR	44D6

R136	RESISTOR	47B6
R137	RESISTOR	50B2
R138	RESISTOR	6C6
R139	RESISTOR	6C6
R140	RESISTOR	6A3
R141	RESISTOR	22B4
R142	RESISTOR	30B3
R143	RESISTOR	44D6
R144	RESISTOR	47C8
R145	RESISTOR	51D6
R146	RESISTOR	6C6
R147	RESISTOR	6C6
R148	RESISTOR	6A3
R149	RESISTOR	22B4
R150	RESISTOR	22B4
R151	RESISTOR	33B6
R152	RESISTOR	40C4
R153	RESISTOR	41A4
R154	RESISTOR	47C7
R155	RESISTOR	50A4
R156	RESISTOR	6C6
R157	RESISTOR	6C6
R158	RESISTOR	6D7
R159	RESISTOR	28B3
R160	RESISTOR	30B3
R161	RESISTOR	33B6
R162	RESISTOR	31B4
R163	RESISTOR	40D4
R164	RESISTOR	41D4
R165	RESISTOR	42A4
R166	RESISTOR	47C7
R167	RESISTOR	38B8
R168	RESISTOR	50B5
R169	RESISTOR	38B8
R170	RESISTOR	49D2
R171	RESISTOR	51B6
R172	RESISTOR	6C6
R173	RESISTOR	6D7
R174	RESISTOR	28A3
R175	RESISTOR	30C4
R176	RESISTOR	39C4
R177	RESISTOR	42B6
R178	RESISTOR	42A5
R179	RESISTOR	47C7
R180	RESISTOR	51D5
R181	RESISTOR	51D6
R182	RESISTOR	6C6
R183	RESISTOR	22B4
R184	RESISTOR	23C3
R185	RESISTOR	30A5
R186	RESISTOR	42B4
R187	RESISTOR	42C6
R188	RESISTOR	42A5
R189	RESISTOR	43B6
R190	RESISTOR	43C4
R191	RESISTOR	47C6
R192	RESISTOR	52A8
R193	RESISTOR	46A5
R194	RESISTOR	29C7
R195	RESISTOR	49A6
R196	RESISTOR	6C6
R197	RESISTOR	48D6
R198	RESISTOR	34C5
R199	RESISTOR	42A5
R200	RESISTOR	43B5
R201	RESISTOR	47C7

R202	RESISTOR	51B6
R203	RESISTOR	49C1
R204	RESISTOR	51B6
R205	RESISTOR	6C6
R206	RESISTOR	39B6
R207	RESISTOR	42D3
R208	RESISTOR	42A5
R209	RESISTOR	29A6
R210	RESISTOR	44B4
R211	RESISTOR	44D5
R212	RESISTOR	47C7
R213	RESISTOR	52A7
R214	RESISTOR	49C2
R215	RESISTOR	6C6
R216	RESISTOR	11C6
R217	RESISTOR	24D3
R218	RESISTOR	30A1
R219	RESISTOR	42B6
R220	RESISTOR	43A3
R221	RESISTOR	44D6
R222	RESISTOR	47D2
R223	RESISTOR	24D4
R224	RESISTOR	30C3
R225	RESISTOR	48D6
R226	RESISTOR	41A8
R227	RESISTOR	39A4
R228	RESISTOR	43B4
R229	RESISTOR	49B3
R230	RESISTOR	51C6
R231	RESISTOR	33A6
R232	RESISTOR	5D6
R233	RESISTOR	24D4
R234	RESISTOR	50C5
R235	RESISTOR	44A5
R236	RESISTOR	51D6
R237	RESISTOR	24A3
R238	RESISTOR	39C4
R239	RESISTOR	52A7
R240	RESISTOR	38D4
R241	RESISTOR	38C6
R242	RESISTOR	38B3
R243	RESISTOR	44A6
R244	RESISTOR	49D5
R245	RESISTOR	49B2
R246	RESISTOR	49C5
R247	RESISTOR	49C4
R248	RESISTOR	49B1
R249	RESISTOR	49D6
R250	RESISTOR	49B4
R251	RESISTOR	49C1
R252	RESISTOR	10C3
R253	RESISTOR	10C3
R254	RESISTOR	10C7
R255	RESISTOR	11C6
R256	RESISTOR	10C3
R257	RESISTOR	10D7
R258	RESISTOR	11C6
R259	RESISTOR	12D8
R260	RESISTOR	11C6
R261	RESISTOR	12D8
R262	RESISTOR	12D8
R263	RESISTOR	30C3
R264	RESISTOR	11C6
R265	RESISTOR	12D8
R266	RESISTOR	11C6
R267	RESISTOR	52C8

IBM

DATE: 15 DEC 1995	SIZE B	REVISION	DRWNG PART NUMBER MPRZP1SCU-03
POWERPC 604 SMP REFERENCE DESIGN			SHEET 61 OF 64

MOTHERBOARD

R268	RESISTOR	11A3
R269	RESISTOR	12B5
R270	RESISTOR	20B4
R271	RESISTOR	24B3
R272	RESISTOR	32B6
R273	RESISTOR	11C6
R274	RESISTOR	12D7
R275	RESISTOR	11A2
R276	RESISTOR	20B4
R277	RESISTOR	21C3
R278	RESISTOR	24B4
R279	RESISTOR	24C3
R280	RESISTOR	30D5
R281	RESISTOR	32B6
R282	RESISTOR	49B2
R283	RESISTOR	11C6
R284	RESISTOR	12D7
R285	RESISTOR	52C8
R286	RESISTOR	28B3
R287	RESISTOR	29B5
R288	RESISTOR	12B5
R289	RESISTOR	20A4
R290	RESISTOR	21B6
R291	RESISTOR	21C3
R292	RESISTOR	21C3
R293	RESISTOR	24B4
R294	RESISTOR	24C3
R295	RESISTOR	25B2
R296	RESISTOR	30D5
R297	RESISTOR	32B6
R298	RESISTOR	32C5
R299	RESISTOR	41B5
R300	RESISTOR	44D5
R301	RESISTOR	35C8
R302	RESISTOR	10C6
R303	RESISTOR	28C6
R304	RESISTOR	29B5
R305	RESISTOR	12D7
R306	RESISTOR	12D7
R307	RESISTOR	12D6
R308	RESISTOR	20A4
R309	RESISTOR	20B6
R310	RESISTOR	21B6
R311	RESISTOR	21C3
R312	RESISTOR	21C3
R313	RESISTOR	24C2
R314	RESISTOR	24C4
R315	RESISTOR	25C3
R316	RESISTOR	25D4
R317	RESISTOR	31A4
R318	RESISTOR	32B6
R319	RESISTOR	32C5
R320	RESISTOR	28C7
R321	RESISTOR	29D7
R322	RESISTOR	32B2
R323	RESISTOR	44C5
R324	RESISTOR	27B6
R325	RESISTOR	10D3
R327	RESISTOR	12D6
R328	RESISTOR	12D6
R329	RESISTOR	20A4
R330	RESISTOR	20B6
R331	RESISTOR	21B6
R332	RESISTOR	21C3
R333	RESISTOR	24C2
R334	RESISTOR	28B7

R335	RESISTOR	25A3
R336	RESISTOR	25B4
R337	RESISTOR	31A4
R338	RESISTOR	32D2
R339	RESISTOR	32C2
R340	RESISTOR	36A5
R341	RESISTOR	40A4
R342	RESISTOR	40A7
R343	RESISTOR	44C5
R344	RESISTOR	10D6
R345	RESISTOR	12D6
R346	RESISTOR	12D6
R347	RESISTOR	11A6
R348	RESISTOR	53C8
R349	RESISTOR	20A6
R350	RESISTOR	20C6
R351	RESISTOR	20B6
R352	RESISTOR	21C3
R353	RESISTOR	24C2
R354	RESISTOR	25D4
R355	RESISTOR	25A3
R356	RESISTOR	25B4
R357	RESISTOR	31B4
R358	RESISTOR	40C3
R359	RESISTOR	44C5
R360	RESISTOR	38B7
R361	RESISTOR	12D5
R362	RESISTOR	11C8
R363	RESISTOR	11A5
R364	RESISTOR	38B7
R365	RESISTOR	20B4
R366	RESISTOR	20A6
R367	RESISTOR	20C7
R368	RESISTOR	20C6
R369	RESISTOR	21C3
R370	RESISTOR	24C2
R371	RESISTOR	25D3
R372	RESISTOR	25B3
R373	RESISTOR	25B4
R374	RESISTOR	32C6
R375	RESISTOR	40B6
R376	RESISTOR	40A7
R377	RESISTOR	40A2
R378	RESISTOR	41C5
R379	RESISTOR	48D6
R380	RESISTOR	10D3
R381	RESISTOR	10D4
R382	RESISTOR	49B6
R383	RESISTOR	19B3
R384	RESISTOR	20C4
R385	RESISTOR	20B4
R386	RESISTOR	48D6
R387	RESISTOR	21C3
R388	RESISTOR	24C2
R389	RESISTOR	25D3
R390	RESISTOR	25B3
R391	RESISTOR	25B5
R392	RESISTOR	31A6
R393	RESISTOR	31A4
R394	RESISTOR	32C5
R395	RESISTOR	35B3
R396	RESISTOR	40A2
R397	RESISTOR	41A5
R398	RESISTOR	41B4
R399	RESISTOR	31B6
R400	RESISTOR	38B7

R401	RESISTOR	48D6
R402	RESISTOR	10D3
R403	RESISTOR	20B4
R404	RESISTOR	20B6
R405	RESISTOR	21B4
R406	RESISTOR	24C2
R407	RESISTOR	25D4
R408	RESISTOR	25B3
R409	RESISTOR	25B3
R410	RESISTOR	31B4
R411	RESISTOR	31D2
R412	RESISTOR	31A6
R413	RESISTOR	32D5
R414	RESISTOR	32C5
R415	RESISTOR	32D7
R416	RESISTOR	34B5
R417	RESISTOR	35B3
R418	RESISTOR	38D2
R419	RESISTOR	40B7
R420	RESISTOR	40A7
R421	RESISTOR	41A4
R422	RESISTOR	41B2
R423	RESISTOR	49B6
R424	RESISTOR	47D3
R425	RESISTOR	10D7
R426	RESISTOR	10D3
R427	RESISTOR	7B8
R428	RESISTOR	20B4
R429	RESISTOR	20A7
R430	RESISTOR	24C3
R431	RESISTOR	25D4
R432	RESISTOR	25B4
R433	RESISTOR	27A5
R434	RESISTOR	31B4
R435	RESISTOR	34C5
R436	RESISTOR	31A6
R437	RESISTOR	35B3
R438	RESISTOR	35C2
R439	RESISTOR	38D2
R440	RESISTOR	40B7
R441	RESISTOR	41C4
R442	RESISTOR	49B7
R443	RESISTOR	49D7
R444	RESISTOR	10B3
R445	RESISTOR	10D3
R446	RESISTOR	25D4
R447	RESISTOR	25B4
R448	RESISTOR	27A5
R449	RESISTOR	34B4
R450	RESISTOR	32B7
R451	RESISTOR	32A5
R452	RESISTOR	35B3
R453	RESISTOR	35D6
R454	RESISTOR	35C2
R455	RESISTOR	35A3
R456	RESISTOR	38A3
R457	RESISTOR	41D6
R458	RESISTOR	41B2
R459	RESISTOR	53D8
R460	RESISTOR	53B2
R461	RESISTOR	10D3
R462	RESISTOR	25D4
R463	RESISTOR	25B4
R464	RESISTOR	27A6
R465	RESISTOR	32B7
R466	RESISTOR	48D6

R467	RESISTOR	32C6
R468	RESISTOR	35B3
R469	RESISTOR	35D6
R470	RESISTOR	35A3
R471	RESISTOR	36C7
R472	RESISTOR	39C3
R473	RESISTOR	38B7
R474	RESISTOR	10D3
R475	RESISTOR	10D3
R476	RESISTOR	25B4
R477	RESISTOR	27B6
R478	RESISTOR	32B7
R479	RESISTOR	32C7
R480	RESISTOR	32C5
R481	RESISTOR	35B3
R482	RESISTOR	35D6
R483	RESISTOR	35B4
R484	RESISTOR	36C7
R485	RESISTOR	36C7
R486	RESISTOR	35A2
R487	RESISTOR	38C7
R488	RESISTOR	39D3
R489	RESISTOR	39A8
R490	RESISTOR	49B3
R491	RESISTOR	49B3
R492	RESISTOR	27B6
R493	RESISTOR	31A4
R494	RESISTOR	32B6
R495	RESISTOR	32B7
R496	RESISTOR	32C6
R497	RESISTOR	35B3
R498	RESISTOR	35D6
R499	RESISTOR	49D7
R500	RESISTOR	36C7
R501	RESISTOR	35A2
R502	RESISTOR	39D7
R503	RESISTOR	41A5
R504	RESISTOR	36C6
R505	RESISTOR	38B7
R506	RESISTOR	33A6
R507	RESISTOR	53B2
R508	RESISTOR	36C6
R509	RESISTOR	38B7
R510	RESISTOR	31B4
R511	RESISTOR	32B5
R512	RESISTOR	32C6
R513	RESISTOR	35B3
R514	RESISTOR	35B3
R515	RESISTOR	35D7
R516	RESISTOR	35B6
R517	RESISTOR	39B7
R518	RESISTOR	39B4
R519	RESISTOR	41A2
R520	RESISTOR	49D3
R521	RESISTOR	53B4
R522	RESISTOR	49D5
R523	RESISTOR	53B4
R524	RESISTOR	48D3
R525	RESISTOR	19C4
R526	RESISTOR	47A3
R527	RESISTOR	31A4
R528	RESISTOR	32B5
R529	RESISTOR	35B3
R530	RESISTOR	35B3
R531	RESISTOR	35C7
R532	RESISTOR	35B2

IBM

DATE: 15 DEC 1995	SIZE B	REVISION	DRWNG PART NUMBER MPRZP1SCU-03
POWERPC 604 SMP REFERENCE DESIGN			SHEET 62 OF 64

MOTHERBOARD

R533	RESISTOR	39B3
R534	RESISTOR	41C4
R535	RESISTOR	41A2
R536	RESISTOR	41B5
R537	RESISTOR	45C5
R538	RESISTOR	47C3
R539	RESISTOR	48D3
R540	RESISTOR	47B3
R541	RESISTOR	32B5
R542	RESISTOR	35B3
R543	RESISTOR	35B6
R544	RESISTOR	35C7
R545	RESISTOR	35A2
R546	RESISTOR	35B2
R547	RESISTOR	39D6
R548	RESISTOR	39B5
R549	RESISTOR	45C5
R550	RESISTOR	32B6
R551	RESISTOR	35B2
R552	RESISTOR	35B2
R553	RESISTOR	39A3
R554	RESISTOR	41B5
R555	RESISTOR	41A3
R556	RESISTOR	35D7
R557	RESISTOR	35B2
R558	RESISTOR	36A6
R559	RESISTOR	39A5
R560	RESISTOR	41C3
R561	RESISTOR	7C5
R562	RESISTOR	36C6
R563	RESISTOR	35A2
R564	RESISTOR	36B5
R565	RESISTOR	36A5
R566	RESISTOR	35A2
R567	RESISTOR	35D8
R568	RESISTOR	36A5
R569	RESISTOR	39A6
R570	RESISTOR	36A5
R571	RESISTOR	39A6
R572	RESISTOR	39B6
R573	RESISTOR	7C5
R574	RESISTOR	7A8
R575	RESISTOR	7C5
R576	RESISTOR	7A7
R577	RESISTOR	7A8
R578	RESISTOR	7A8
R579	RESISTOR	7A8
R580	RESISTOR	7A8
R581	RESISTOR	7A8
R582	RESISTOR	8C6
R583	RESISTOR	8C6
R584	RESISTOR	8C6
R585	RESISTOR	48D6
R586	RESISTOR	38C6
R587	RESISTOR	20B6
R588	RESISTOR	6C6
R589	RESISTOR	6C6
R590	RESISTOR	6C6
R591	RESISTOR	6C6
R592	RESISTOR	6C6
R593	RESISTOR	6B6
R594	RESISTOR	6B6
R595	RESISTOR	6B6
R596	RESISTOR	6B6
R597	RESISTOR	6B6
R598	RESISTOR	6B6

R599	RESISTOR	6B6
R600	RESISTOR	6B6
R601	RESISTOR	6B6
R602	RESISTOR	6B6
R603	RESISTOR	6B6
R604	RESISTOR	6B6
R605	RESISTOR	6B6
R606	RESISTOR	6B6
R607	RESISTOR	6B6
R608	RESISTOR	5C5
R609	RESISTOR	5C5
R610	RESISTOR	5C5
R611	RESISTOR	5C5
R612	RESISTOR	5C5
R613	RESISTOR	5C5
R614	RESISTOR	5C5
R615	RESISTOR	5C5
R616	RESISTOR	5C5
R617	RESISTOR	5C5
R618	RESISTOR	5C5
R619	RESISTOR	5C5
R620	RESISTOR	5C5
R621	RESISTOR	5C5
R622	RESISTOR	5C5
R623	RESISTOR	5C5
R624	RESISTOR	5C5
R625	RESISTOR	5C5
R626	RESISTOR	5C5
R627	RESISTOR	5C5
R628	RESISTOR	5C5
R629	RESISTOR	5C5
R630	RESISTOR	5C5
R631	RESISTOR	5B5
R632	RESISTOR	5B5
R633	RESISTOR	5B5
R634	RESISTOR	5B5
R635	RESISTOR	5B5
R636	RESISTOR	5B5
R637	RESISTOR	5B5
R638	RESISTOR	5B5
R639	RESISTOR	5B5
R640	RESISTOR	5B5
R641	RESISTOR	5B5
R642	RESISTOR	5B5
R643	RESISTOR	5B5
R644	RESISTOR	5B5
R645	RESISTOR	5B5
R646	RESISTOR	5B5
R647	RESISTOR	5A5
R648	RESISTOR	5A5
R649	RESISTOR	5A5
R650	RESISTOR	5A5
R651	RESISTOR	5A5
R652	RESISTOR	5A5
R653	RESISTOR	5A5
R654	RESISTOR	5A5
R655	RESISTOR	5A5
R656	RESISTOR	5A5
R657	RESISTOR	5A5
R658	RESISTOR	5A5
R659	RESISTOR	5A5
R660	RESISTOR	5A5
R661	RESISTOR	5A5
R662	RESISTOR	5A5
R663	RESISTOR	5A5
R664	RESISTOR	5A5

R665	RESISTOR	5A5
R666	RESISTOR	5A5
R667	RESISTOR	5A5
R668	RESISTOR	5A5
R669	RESISTOR	5A5
R670	RESISTOR	5A5
R671	RESISTOR	5A5
R672	RESISTOR	25D6
R673	RESISTOR	25D6
R674	RESISTOR	25D4
R675	RESISTOR	25D3
R676	RESISTOR	31B7
R677	RESISTOR	36C6
R678	RESISTOR	33B6
R679	RESISTOR	33B6
R680	RESISTOR	33B6
R681	RESISTOR	33B6
R682	RESISTOR	30A7
R683	RESISTOR	31A6
R684	RESISTOR	10C7
R685	RESISTOR	32D5
R686	RESISTOR	34C5
R687	RESISTOR	10C6
R688	RESISTOR	10C6
R689	RESISTOR	10C6
R690	RESISTOR	10C6
R691	RESISTOR	10C6
R692	RESISTOR	10C6
R693	RESISTOR	10C6
R694	RESISTOR	10C6
R695	RESISTOR	36C6
R696	RESISTOR	36C6
R697	RESISTOR	31A6
R698	RESISTOR	23D5
R699	RESISTOR	32B7
R700	RESISTOR	36C6
R701	RESISTOR	7B8
R702	RESISTOR	10C7
R703	RESISTOR	7A6
R704	RESISTOR	20B6
R705	RESISTOR	20A6
R706	RESISTOR	7A5
R707	RESISTOR	7A4
R708	RESISTOR	19B3
R709	RESISTOR	19B3
R710	RESISTOR	7A4
R711	RESISTOR	10D4
R712	RESISTOR	10B3
R713	RESISTOR	10C3
R714	RESISTOR	10C3
R715	RESISTOR	10B3
R716	RESISTOR	10B3
R717	RESISTOR	10B3
R718	RESISTOR	21B6
R719	RESISTOR	36C6
R720	RESISTOR	36C6
R721	RESISTOR	36C6
R722	RESISTOR	36C5
R723	RESISTOR	36C5
R724	RESISTOR	36C5
R725	RESISTOR	49D4
R726	RESISTOR	49B4
R727	RESISTOR	49B4
R728	RESISTOR	49A4
R729	RESISTOR	49B3
R730	RESISTOR	49B3

R731	RESISTOR	49B3
R732	RESISTOR	49A3
R733	RESISTOR	28A2
R736	RESISTOR	31A7
R737	RESISTOR	20B7
R738	RESISTOR	10C3
R739	RESISTOR	11A6
R740	RESISTOR	34B4
R741	RESISTOR	12D5
R742	RESISTOR	12D5
R743	RESISTOR	12D5
R744	RESISTOR	12D5
R745	RESISTOR	12D5
R746	RESISTOR	12D5
R747	RESISTOR	12D4
R748	RESISTOR	12D4
R749	RESISTOR	12D4
R750	RESISTOR	12D4
R751	RESISTOR	12D3
R752	RESISTOR	12D3
R753	RESISTOR	12D3
R754	RESISTOR	12D3
R755	RESISTOR	12D3
R756	RESISTOR	12D3
R757	RESISTOR	12D3
R758	RESISTOR	12D2
R759	RESISTOR	12C2
R761	RESISTOR	33C6
R762	RESISTOR	33C6
R763	RESISTOR	33C6
R764	RESISTOR	49B7
R765	RESISTOR	49B7
R766	RESISTOR	11A5
R767	RESISTOR	31A4
R768	RESISTOR	47C3
R769	RESISTOR	47B3
R770	RESISTOR	33C6
R771	RESISTOR	33C6
R772	RESISTOR	33C4
R773	RESISTOR	33C4
R774	RESISTOR	33C4
R775	RESISTOR	33B5
R776	RESISTOR	33B5
R777	RESISTOR	48D6
R778	RESISTOR	48D5
R779	RESISTOR	48D5
R780	RESISTOR	48D5
R781	RESISTOR	48D5
R782	RESISTOR	48D5
R783	RESISTOR	48D5
R784	RESISTOR	48D5
R785	RESISTOR	48D5
R786	RESISTOR	48D5
R787	RESISTOR	48D5
R788	RESISTOR	48D4
R789	RESISTOR	48D4
R790	RESISTOR	48D4
R791	RESISTOR	48D4
R792	RESISTOR	48D4
R793	RESISTOR	48D4
R794	RESISTOR	48D4
R795	RESISTOR	48D4
R796	RESISTOR	48D4
R797	RESISTOR	48D4
R798	RESISTOR	48D3
R799	RESISTOR	48D3

IBM

DATE: 15 DEC 1995	SIZE B	REVISION	DRWNG PART NUMBER MPRZP1SCU-03
POWERPC 604 SMP REFERENCE DESIGN			SHEET 63 OF 64

MOTHERBOARD

R800	RESISTOR	10C3
R801	RESISTOR	52C7
R802	RESISTOR	52C4
R803	RESISTOR	52C6
R804	RESISTOR	52C6
R805	RESISTOR	52C5
R806	RESISTOR	46B4
R807	RESISTOR	32A5
R808	RESISTOR	27B6
R809	RESISTOR	27B6
R810	RESISTOR	27B6
R811	RESISTOR	27C6
R812	RESISTOR	27B6
R813	RESISTOR	27B6
R814	RESISTOR	27B5
R815	RESISTOR	27B5
R816	RESISTOR	27D5
R817	RESISTOR	27B5
R818	RESISTOR	12B5
R819	RESISTOR	27B5
R820	RESISTOR	27B5
R821	RESISTOR	27B5
R822	RESISTOR	27B5
R823	RESISTOR	27C4
R824	RESISTOR	27B4
R825	RESISTOR	27B4
R826	RESISTOR	32B3
R827	RESISTOR	27B4
R828	RESISTOR	32D3
R829	RESISTOR	32D3
R830	RESISTOR	27B4
R831	RESISTOR	32B2
R832	RESISTOR	27B3
R833	RESISTOR	27B3
R834	RESISTOR	27B3
R835	RESISTOR	27B3
R836	RESISTOR	27B3
R837	RESISTOR	27B3
R838	RESISTOR	27B3
R839	RESISTOR	27B2
R840	RESISTOR	19B3
R841	RESISTOR	31A4
R842	RESISTOR	25D5
R843	RESISTOR	7A8
R845	RESISTOR	46B6
R846	RESISTOR	19C4
R847	RESISTOR	25D5
R848	RESISTOR	19C4
R849	RESISTOR	19C3
R850	RESISTOR	19C3
R851	RESISTOR	27B4
R852	RESISTOR	27B4
R853	RESISTOR	32C2
R854	RESISTOR	32C2
R855	RESISTOR	31A7
R856	RESISTOR	34C5
R857	RESISTOR	34C5
R858	RESISTOR	19C5
R859	RESISTOR	19B5
R860	RESISTOR	19B5
R861	RESISTOR	34C6
R862	RESISTOR	33B5
R863	RESISTOR	33B5
R864	RESISTOR	33A5
R884	RESISTOR	12B3
R885	RESISTOR	12C3

R886	RESISTOR	20C6
R887	RESISTOR	43B6
R888	RESISTOR	49C5
R889	RESISTOR	50C6
R890	RESISTOR	50A5
R891	RESISTOR	31A7
R892	RESISTOR	33B5
R893	RESISTOR	33D5
R894	RESISTOR	33C5
R895	RESISTOR	33B5
R896	RESISTOR	49A3
R897	RESISTOR	32C3
R898	RESISTOR	11B6
R899	RESISTOR	11A6
R900	RESISTOR	30A1
R901	RESISTOR	33A6
R902	RESISTOR	33A5
R903	RESISTOR	7C8
R904	RESISTOR	7C8
R905	RESISTOR	7C5
R906	RESISTOR	7C5
R907	RESISTOR	5D7
R908	RESISTOR	20B6
R909	RESISTOR	23C3
R910	RESISTOR	23C3
R911	RESISTOR	33A5
R912	RESISTOR	46B6
R913	RESISTOR	52C5
R914	RESISTOR	33C6
S3	DO_NOT_POP_PLCC20	54B6
S4	DO_NOT_POP_16	54C4
S5	DO_NOT_POP_16	54C4
S6	DO_NOT_POP_PLCC28	54C3
S7	DO_NOT_POP_PLCC28	54B3
S8	DO_NOT_POP_PLCC28	54C2
S9	DO_NOT_POP_PLCC28	54B2
T1	E_XFORM	30D3
U1	F06	51B7 51C7 51D7 54A3
U2	AM79C970	30D5
U3	IBM82664	10D5 11D7 12C3 13A7
U4	IBM82663V2	11C3 12B5 13C7 13D2 13D4
U5	ALS21	12B6 53C6
U6	F04	28B3 32C2 35C7 36B6 53C5 54B3
U7	F244	31D2 31D3
U8	CS4232	38C4
U10	MPIC	22D5 23D3
U11	F07	44A6 44A6 44B1
U12	NCR53C810	28D4
U13	ABT244	12D6
U14	UC5601	29B4
U15	F04	38A6 38B7 49B3 54A3
U16	F08	38A6 49B6 54A4
U18	TL084	39A7 39D6 42B3 42C3
U19	DS1385	50D4
U20	8042H	50B4
U21	HCT14	31A2 31A3 52C2 52C3 53C6 53C7
U22	F157	8D6
U23	F244	47A2 47D6
U24	ABT244	12D4 12D5
U25	F125	32C2 53B4 53C4
U26	MPC970	20C5
U27	F244	36A4 54A4
U28	F244	47C2 47D2
U29	F244	47B6 47C6
U30	S4403	21C5
U32	82378_82376	31D4 32A7 32D3

U33	PC87332	35D5
U34	F125	35C2 46A3 52C8
U35	LM317	45D6
U36	LT1431REG	52A7
U37	LM78M05	38C2
U38	TL084	41A4 41B3 41B5 41C4
U39	TDA7052	40A5
U40	TDA1308T	39A5 39B5
U42	ABT244	12D3 12D4
U43	F125	36D4 36D4 36D5
U44	F125	36D5 36D6
U45	F244	34B5 34C5
U46	SN75C185	37B6
U47	SN75C185	37D6
U50	F139	48B7 54B2
U51	YMF289S	43D5
U52	F244	48A6 48B6
U53	F244	48C6
U54	F244	48C5
U55	F245	31C3
U56	F244	47B2 47C2
U57	YAC516E	43C3
U58	F244	48A5 48B5
U59	ABT244	12D7 12D8
U60	F126	47A3 47B3 47C3 54A2
U61	F00	29B5 53C5 54A1 54B1
X1	PART	49A4
X2	PART	9B2
X3	PART	9C3
X6	PART	49D7
X7	EMC_PAD	45B8
X8	PART	8D5
X9	PART	27D3
X10	EMC_PAD	45B8
X13	PART	46D4
X16	PART	30B2
X17	PART	52B7
X19	PART	20C8
Y1	OSCILLATOR	28C7
Y2	XTAL	38D7
Y3	XTAL	50D6
Y4	XTAL	49C6
Y5	XTAL	50B6
Y6	OSCILLATOR	32D8
Y7	OSCILLATOR	46A6
Y8	CRYSTAL	20D8
Y9	OSCILLATOR	35D8
Y10	XTAL	30D4
Y11	CRYSTAL	43C7
Y12	XTAL	38C7
Y13	XTAL	20D7
Y15	XTAL	43C7

IBM

DATE: 15 DEC 1995

SIZE B | REVISION | DRWNG PART NUMBER MPRZP1SCU-03

POWERPC 604 SMP
REFERENCE DESIGN

SHEET 64 OF 64

MOTHERBOARD