PF.228 FLOATING POINT (1906/7)

LOGICAL DRAWING INDEX

GROUP WGB.07

WGB.07/0o	WGB.07/18o	WGB.07/36o	WGB.07/51o
" 0ı	" 18ı	" 36ı	" 51ı
" 1o	" 19o	" 37o	" 51₂
" 1ı	" 19ı	" 37ı	" 51₃
" 2o	" 20o	" 38o	" 52o
" 2ı	" 20ı	" 38ı	" 52ı
" 3o	" 21o	" 39o	" 53o
" 3ı	" 21ı	" 39ı	" 53ı
" 4o	" 22o	" 39₂	" 54o
" 4ı	" 22ı	" 39₃	" 54ı
" 5o	" 23o	" 39₄	" 55o
" 5ı	" 23ı	" 39₅	" 55ı
" 6o	" 24o	" 40o	" 56o
" 6ı	" 24ı	" 40ı	" 56ı
" 7o	" 25o	" 41o	" 57o
" 7ı	" 25ı	" 41ı	" 57ı
" 8o	" 26o	" 42o	" 57₂
" 8ı	" 26ı	" 42ı	" 58o
" 9o	" 27o	" 43o	" 58ı
" 9ı	" 27ı	" 43ı	" 59o
" 10o	" 28o	" 44o	" 59ı
" 10ı	" 28ı	" 44ı	
" 11o	" 29o	" 45o	
" 11ı	" 29ı	" 45ı	
" 12o	" 30o	" 46o	
" 12ı	" 30ı	" 46ı	
" 13o	" 31o	" 47o	
" 13ı	" 31ı	" 47ı	
" 14o	" 32o	" 48o	
" 14ı	" 32ı	" 48ı	
" 15o	" 33o	" 49o	
" 15ı	" 33ı	" 49ı	
" 16o	" 34o	" 50o	
" 16ı	" 34ı	" 50ı	
" 17o	" 35o	" 50₂	
" 17ı	" 35ı	" 50₃	

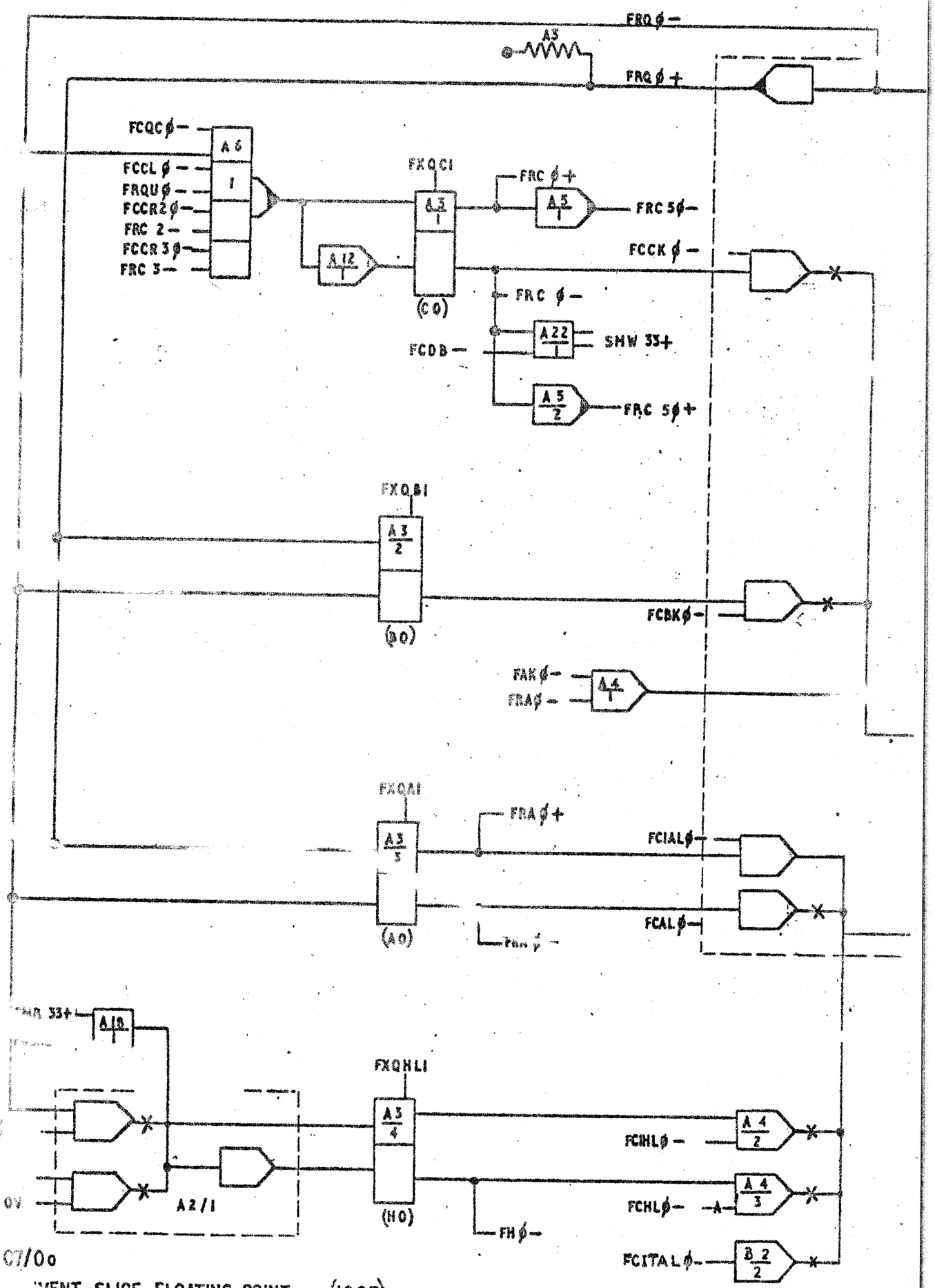

B.07/00

ARGUMENT SLICE FLOATING POINT. (1907)

SUB	1SS	1												
ACW	ACD 5061	B CD 5145												
DATE	4/1/66	24/1/66												

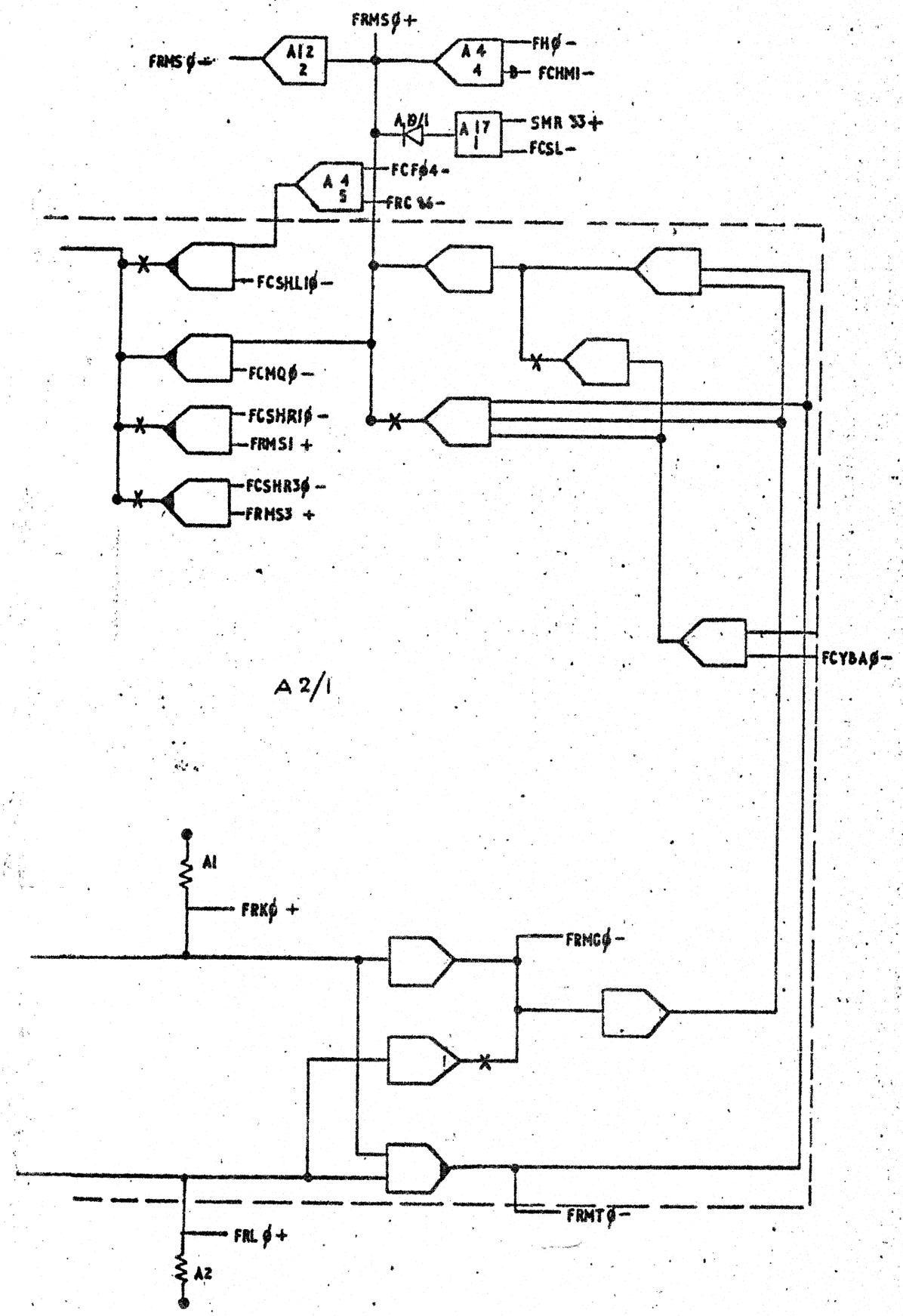

WGB.07/01

ARGUMENT SLICE FLOATING POINT. (1907)

SUB	155	1	2											
AGW	5061	ACD 5145	0673											
DATE	4/1/66	24/1/66	8/3/67											

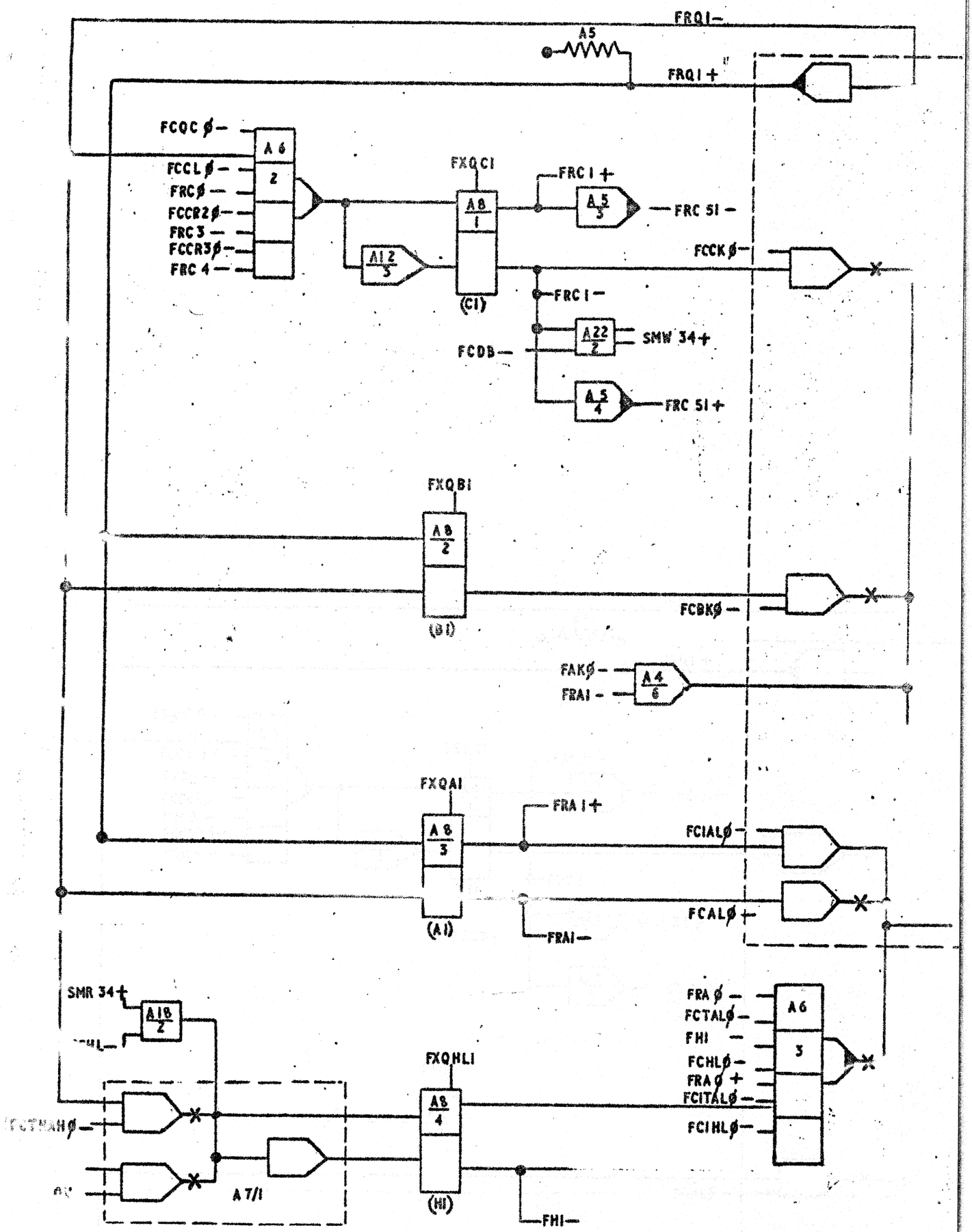

B.07/10

ARGUMENT SLICE FLOATING POINT. (1907)

SUB	1ss														
ACW	5061														
DATE	4/1/65														

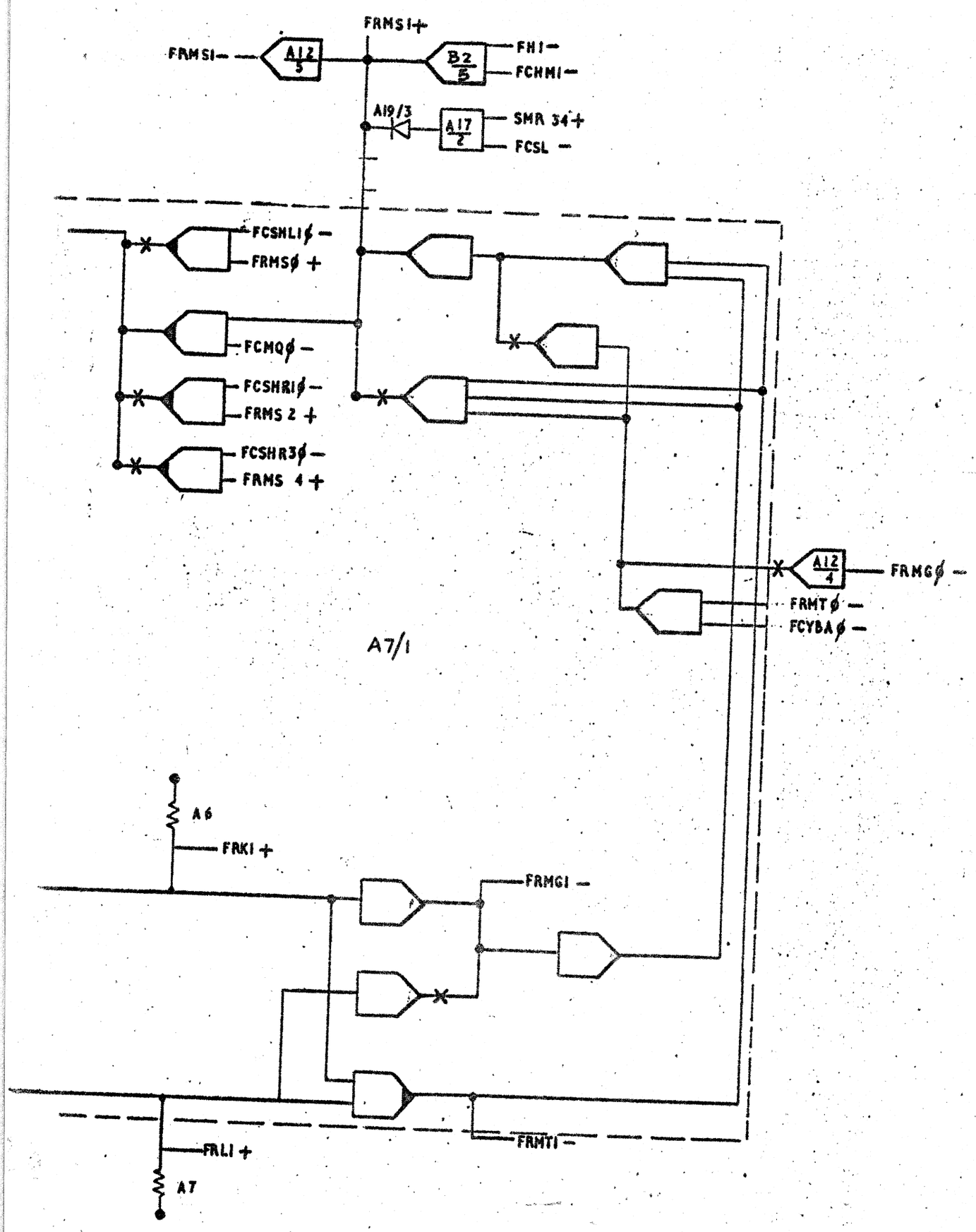

WGB.07/11

ARGUMENT SLICE FLOATING POINT. (1907)

SUB	1SS	1	2												
ACW	5061 ACD	6344 ACD	0673												
DATE	4/1/66	23/9/66	8/3/67												

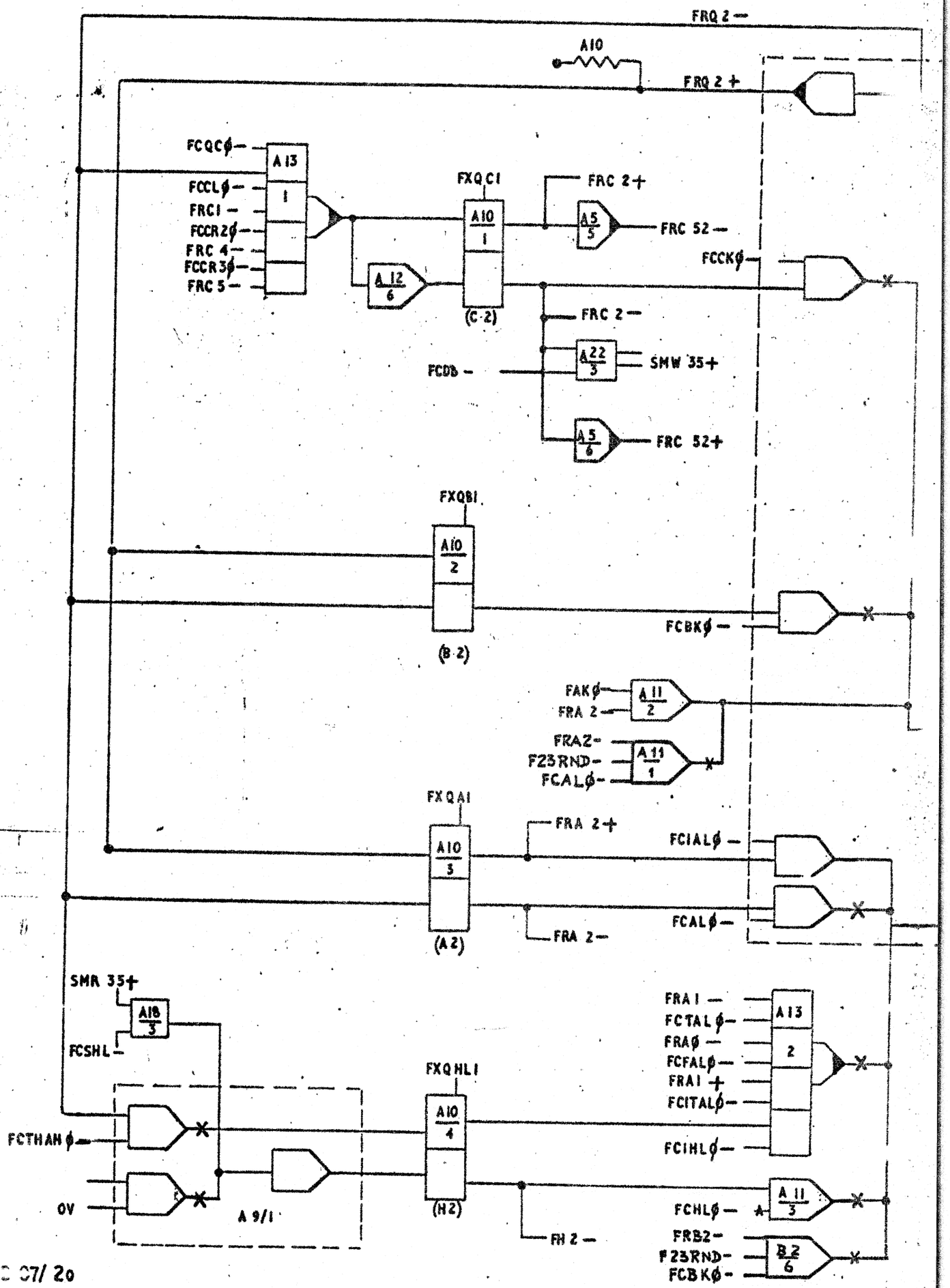

W 00 07/20

ARGUMENT SLICE FLOATING POINT. (1907)

SUB	1SS	1													
A.C.W	ACD 5061	ACD 6344													
DATE	4.1.66	23/9/66													

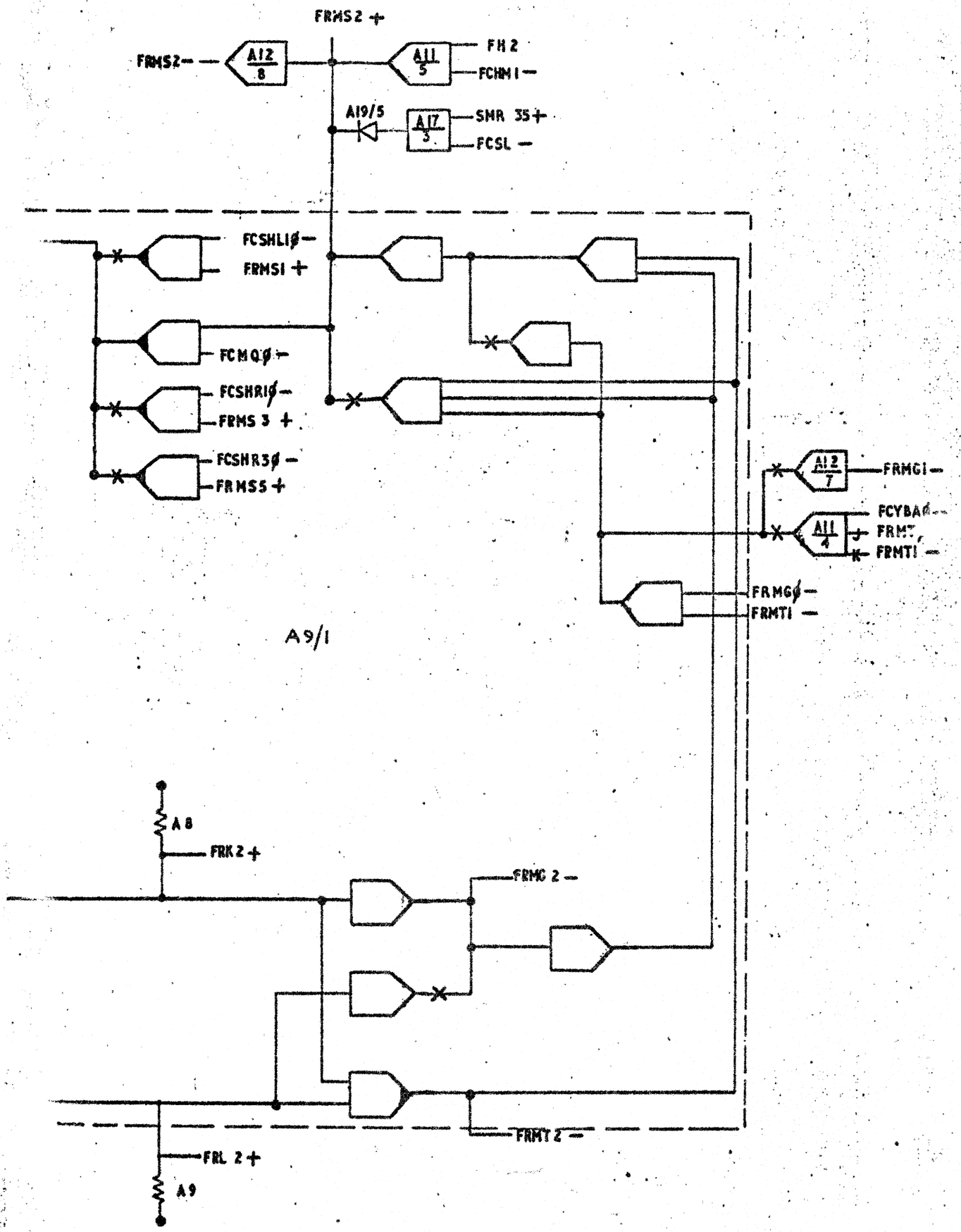

WGB.07/21

ARGUMENT SLICE FLOATING POINT. (1907)

SUB	ISS	1	2	3										
ACD	5069 ACD	5767	5985	ACW 0673										
DATE	4·1·66	20/5/66	8/7/66	8/3/67										

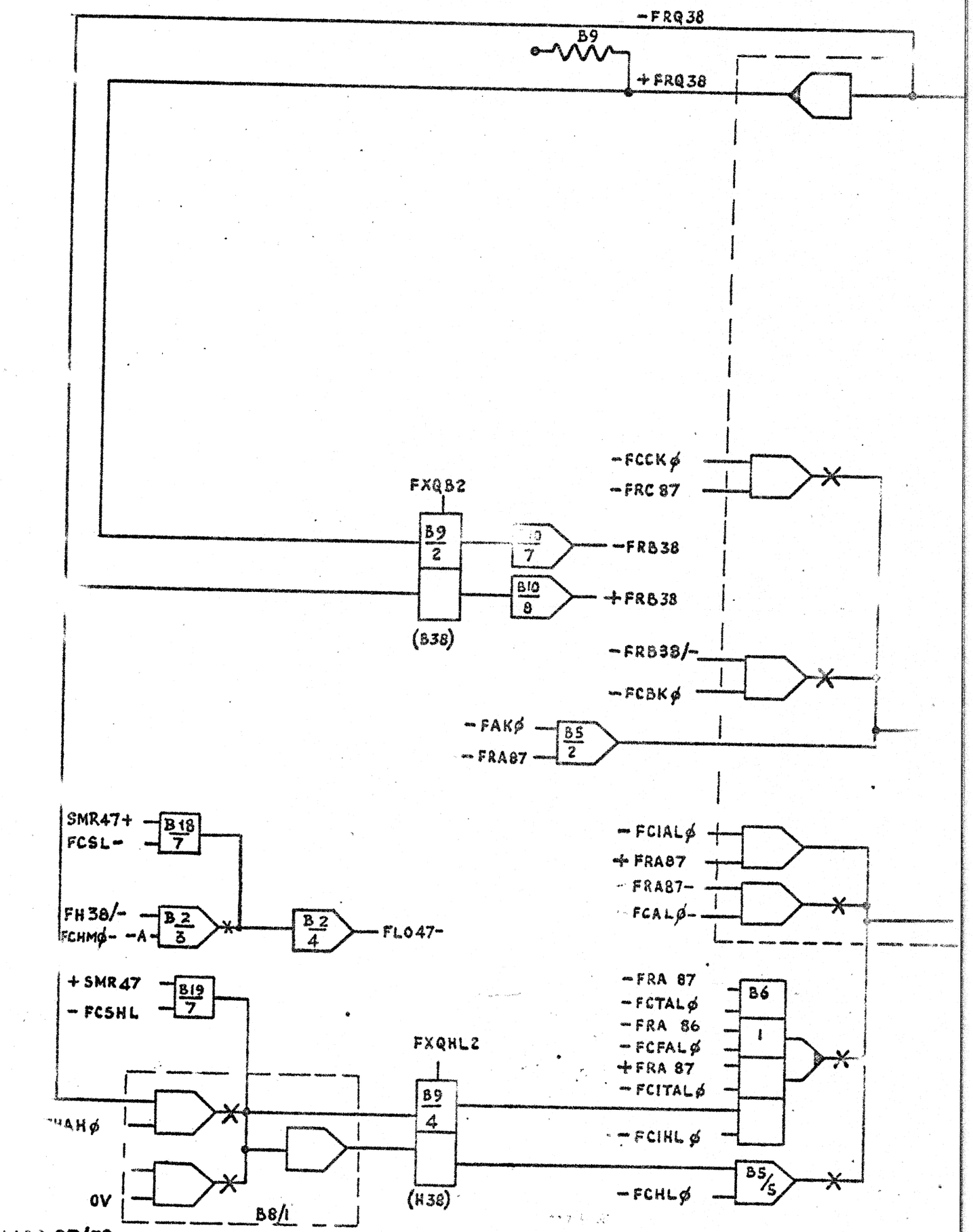

WCB 07/38 o

ARGUMENT SLICE FLOATING POINT (1907)

SUB	ISS	1	2											
ACW	ACD 5061	ACD 5318	ACD 6344											
DATE	4/1/66	24/2/66	23/9/66											

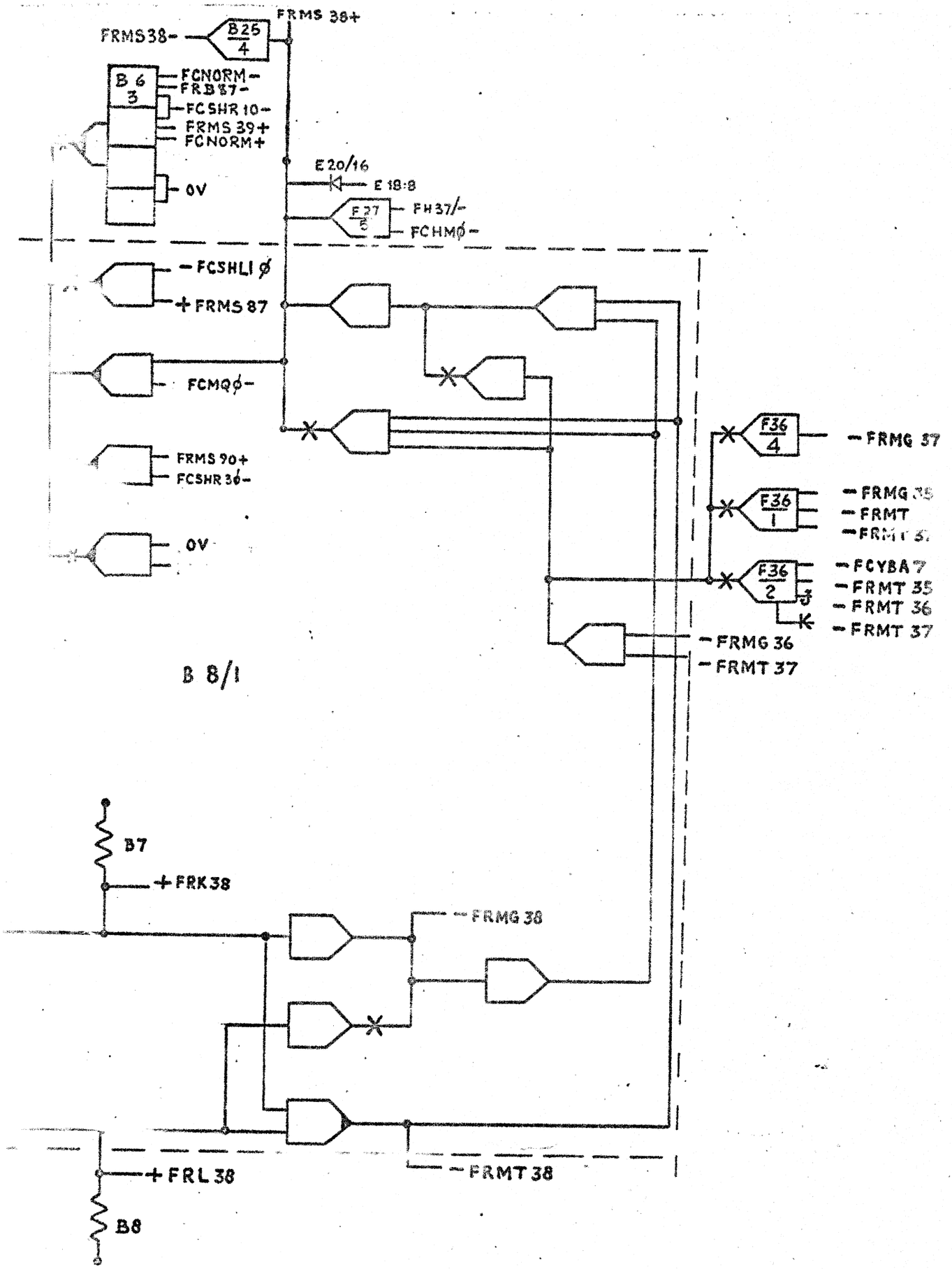

WCB 07/38.

ARGUMENT SLICE FLOATING POINT (1907)

ISS	1	2	3	4	5
	5066	6318	5767	5985	4344	0673

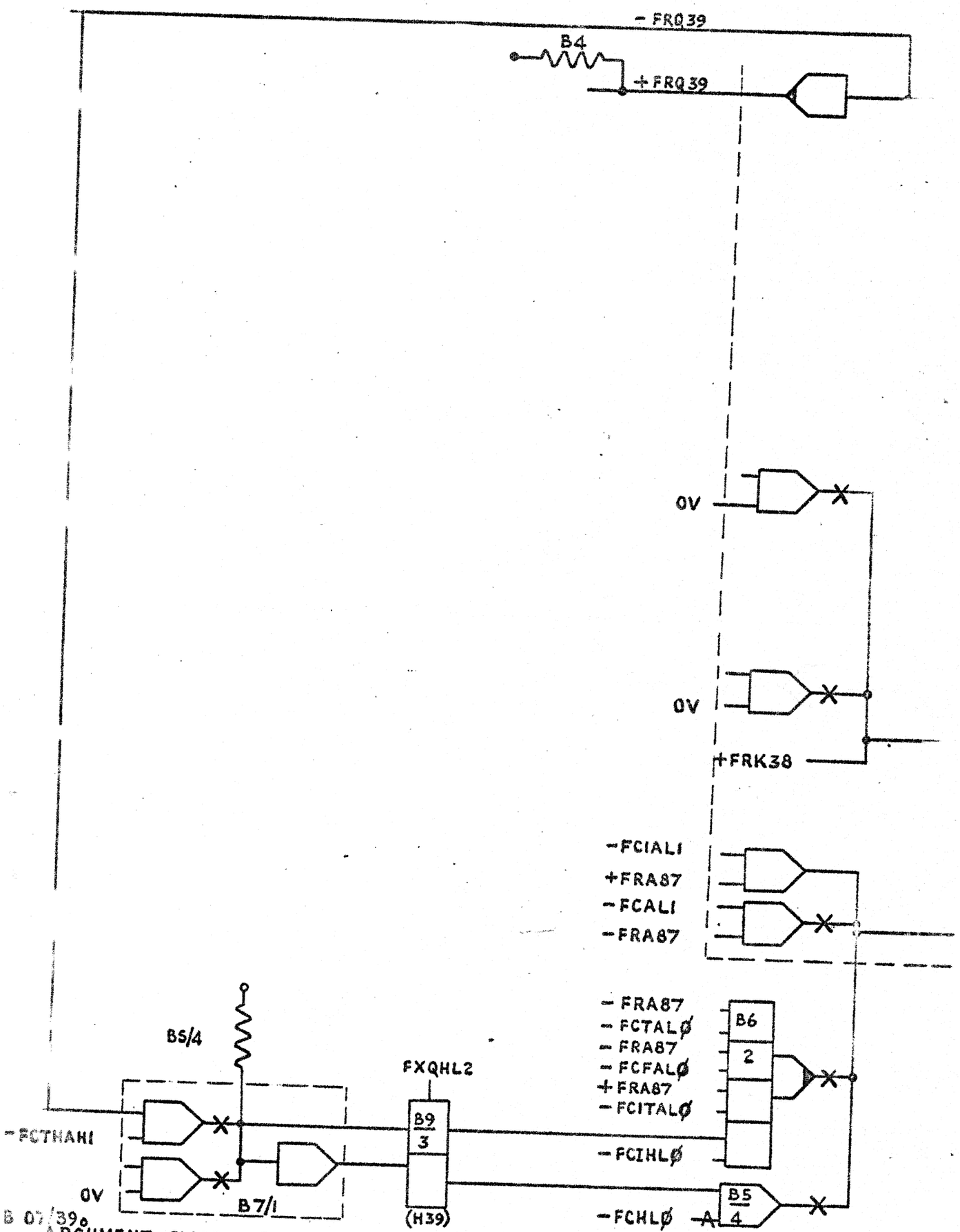

B 07/39.

ARGUMENT SLICE FLOATING POINT (1907)

SUB	ISS
	ACD 5061
	14/1/66

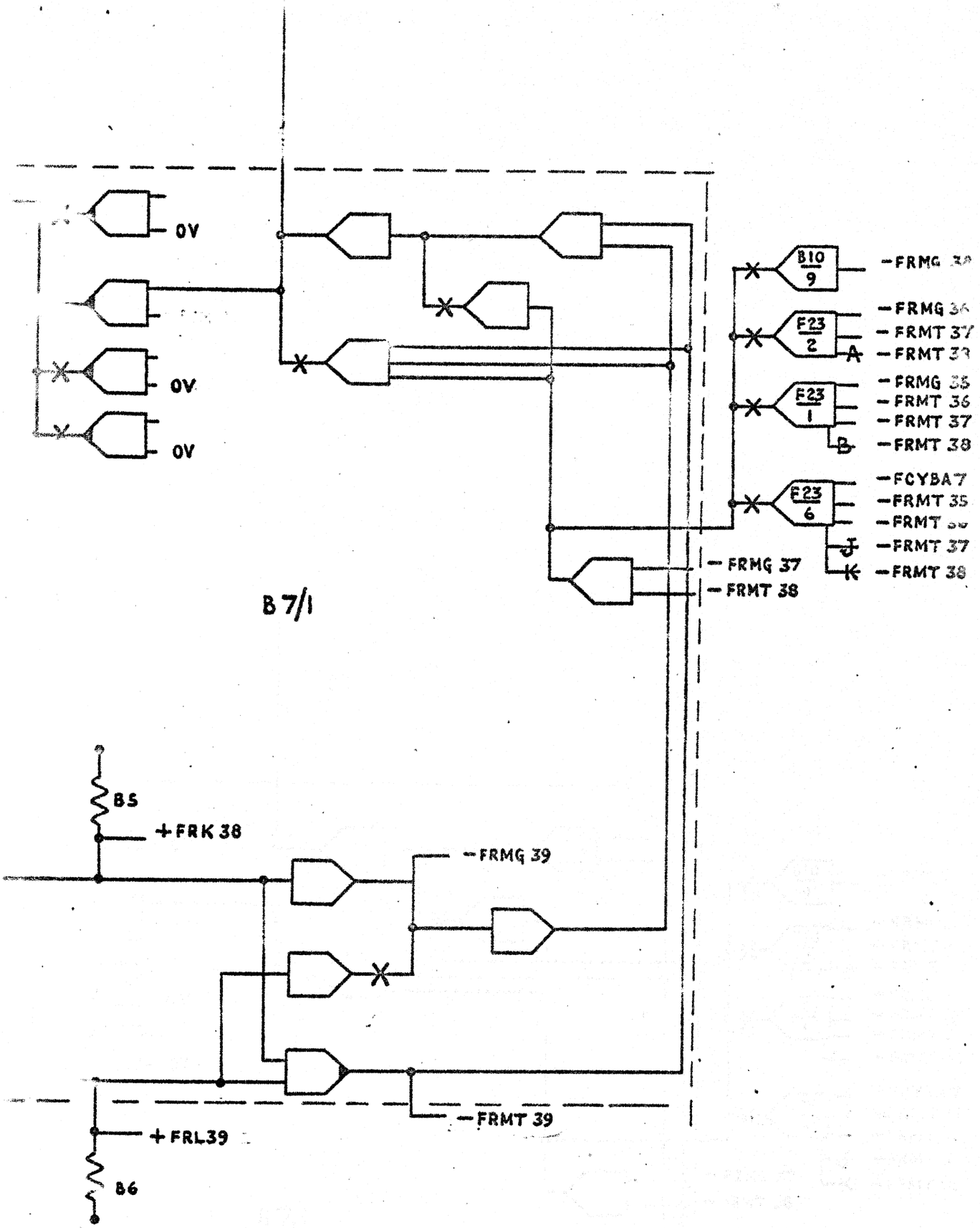

ARGUMENT SLICE FLOATING POINT (1907) WGB 07/39 1

SUB	ISS													
ACW	ACD 5061													
DATE	4/1/66													

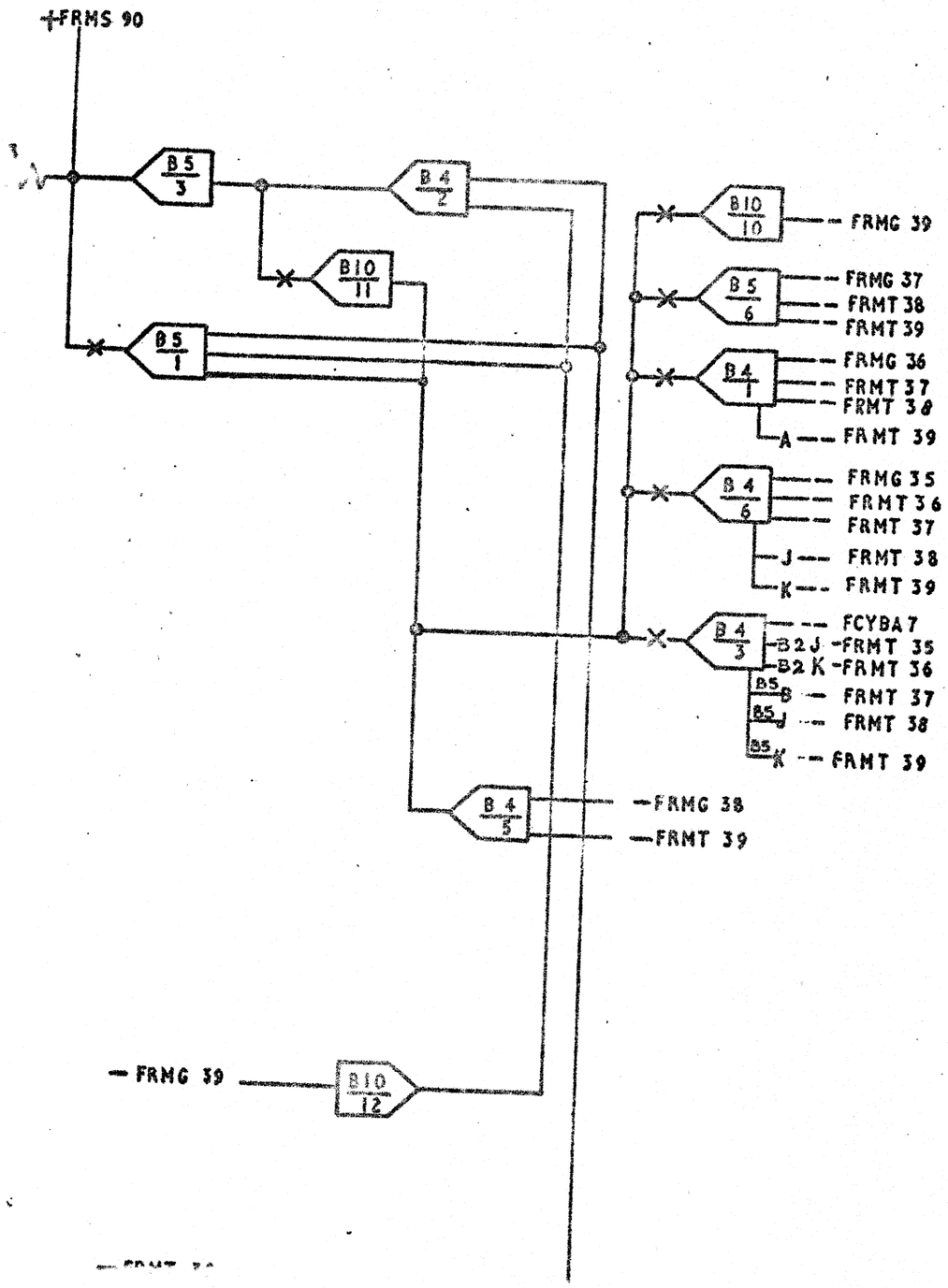

/392 ARGUMENT SLICE FLOATING POINT

	ISS													
	RCD 5061													
DATE	4/1/66													

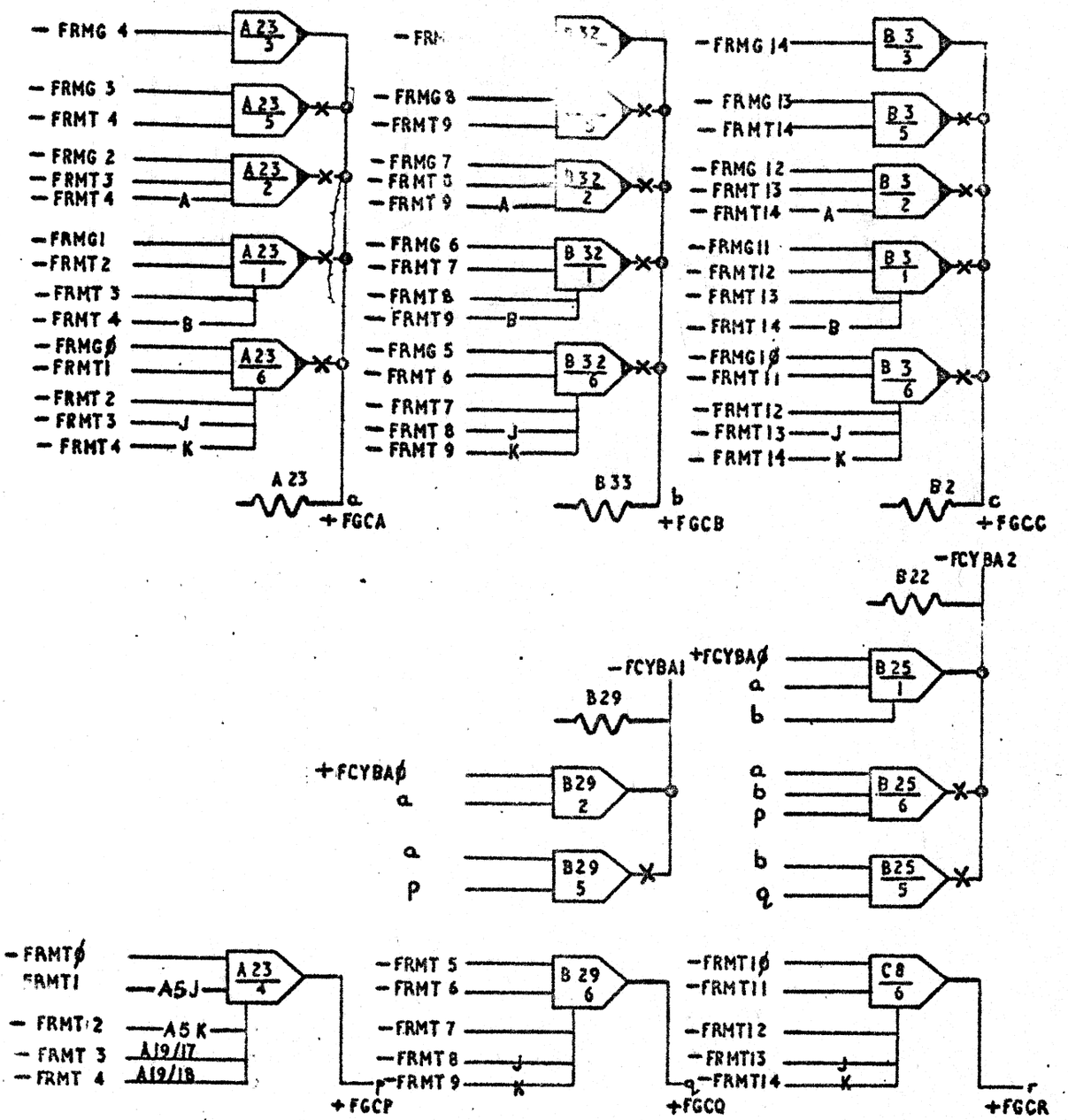

BLOCK CARRY (ARGUMENT)

WGB 07/39

SUB	1SS													
ACW	ACD 5061													
DATE	4/1/66													

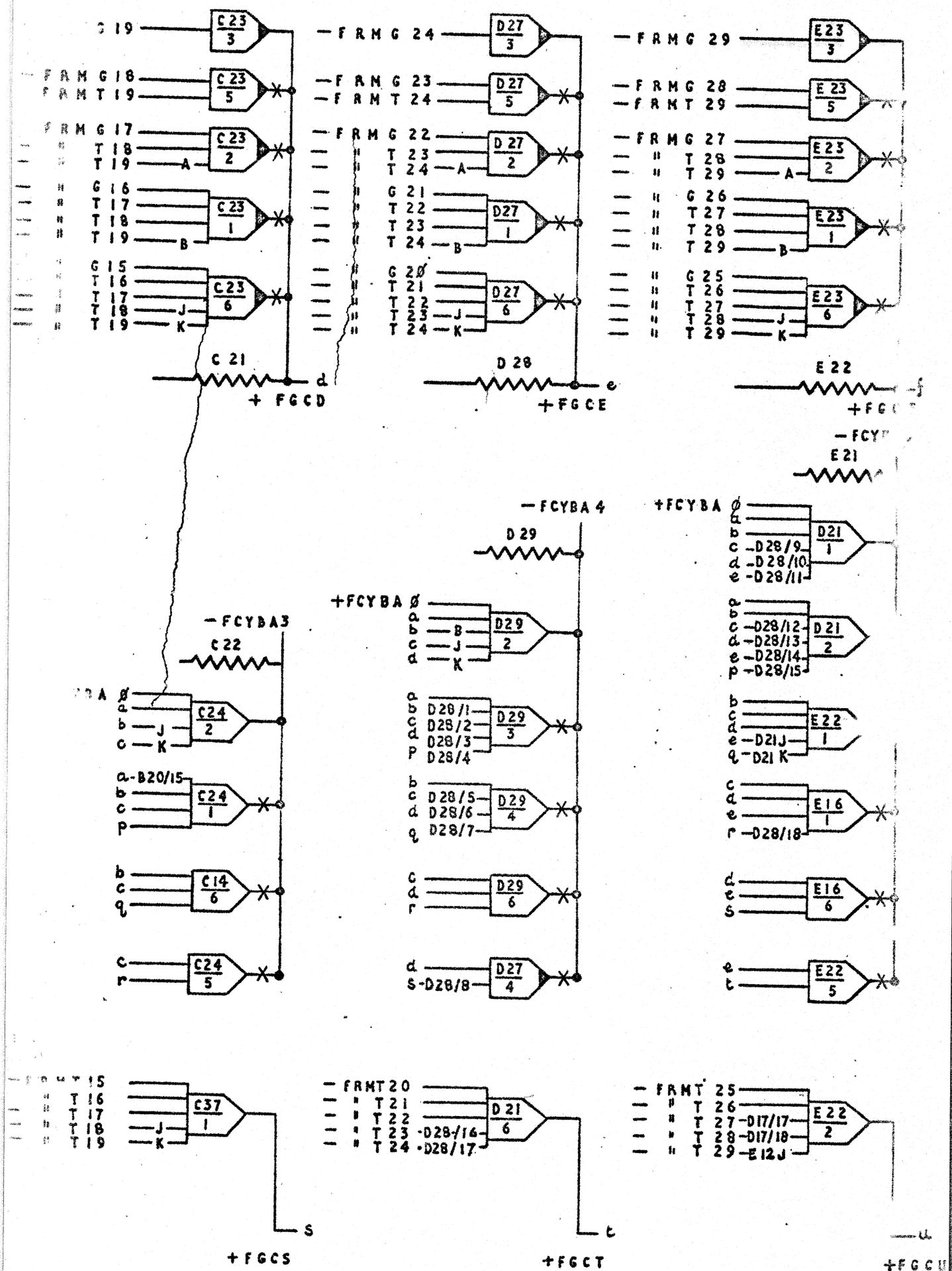

W.G.B.07/39$_4$

ARGUMENT SLICE FLOATING POINT (1907) BLOCK CARRY

SUB.	ISS													
A.C.W.	AED 5061													
DATE														

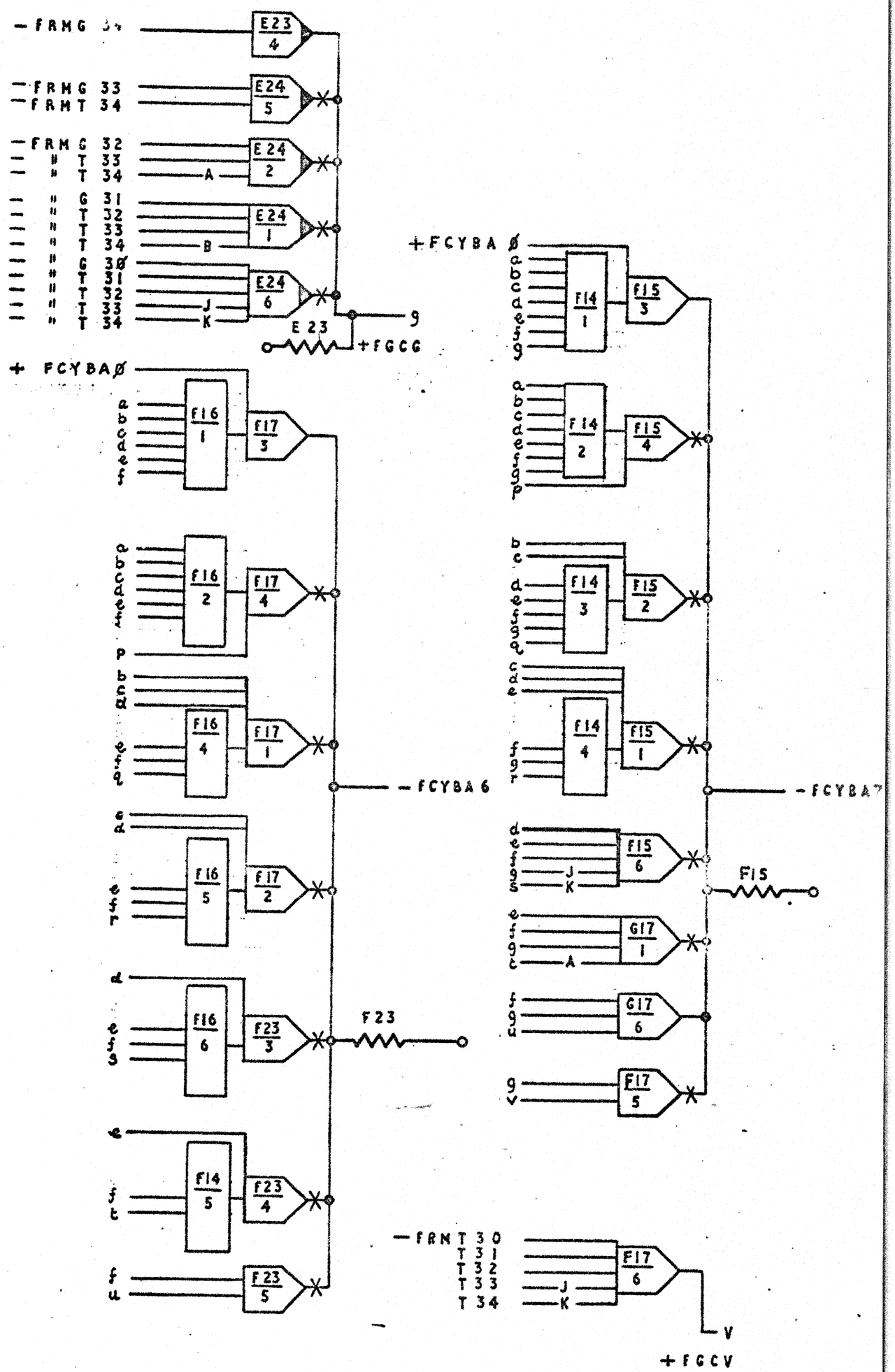

ARGUMENT SLICE FLOATING POINT (1907) BLOCK CARRY

WGB 07/39s

SUB	ISS	1												
A.C.W.	ACD 5061	0673												
DATE	4/1/66	8/3/67												

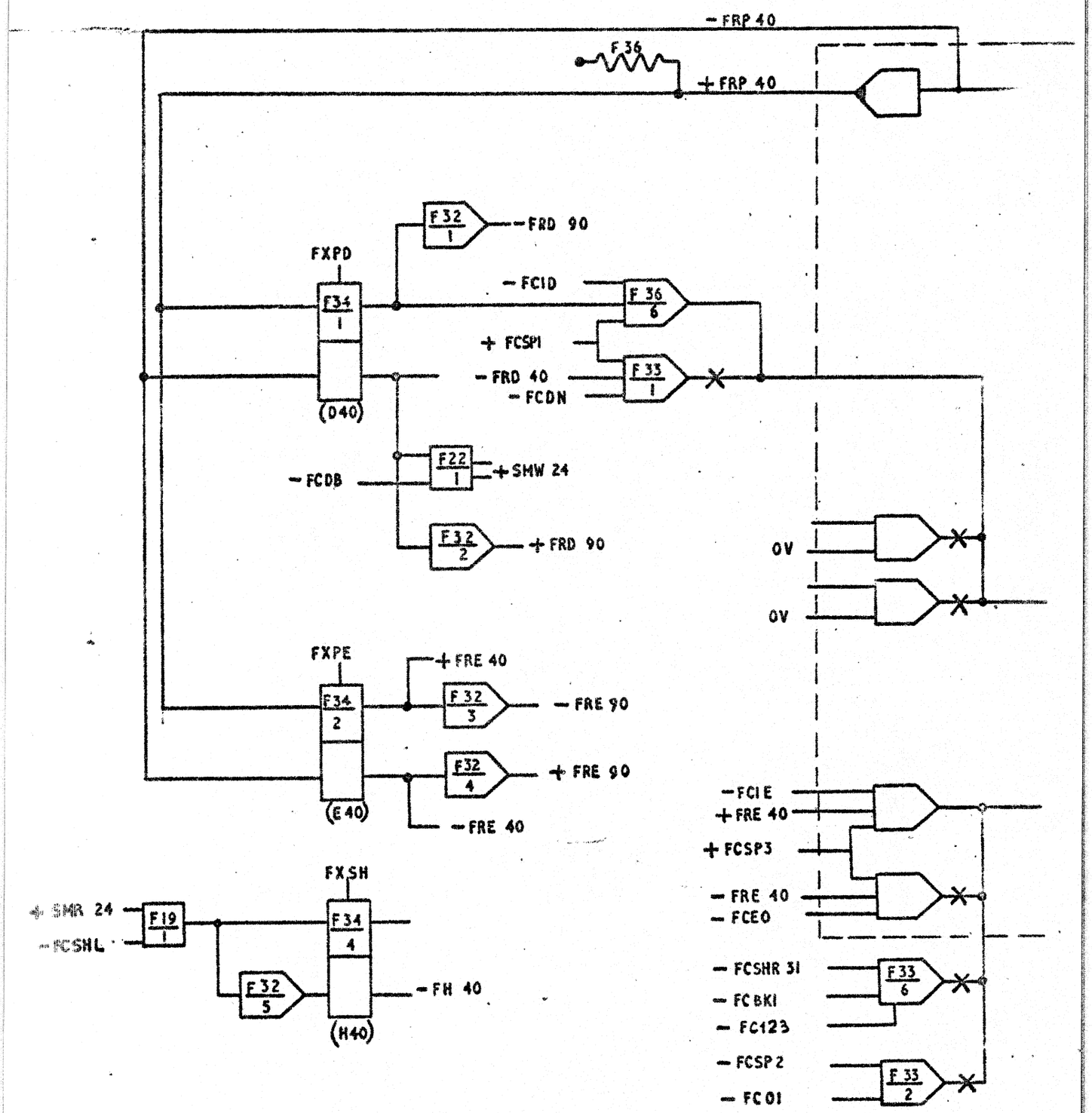

07/400

FLOATING POINT (1907) EXPONENT SLICE

SUB	1SS													
ACW	ACD 5061													
DATE	[illegible]													

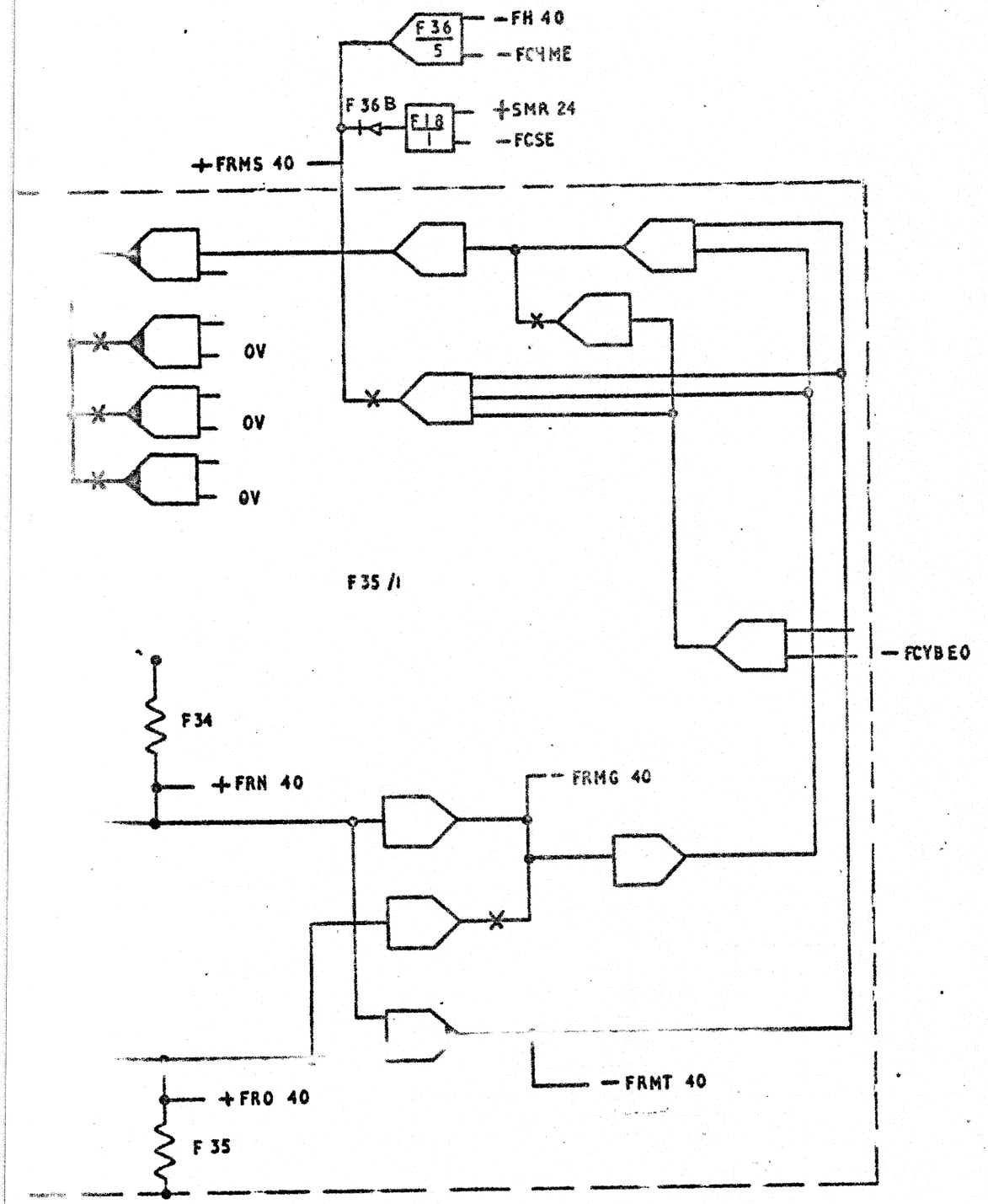

FLOATING POINT (1907) EXPONENT SLICE

WGB 07/40

SUB	ISS	1												
ACW	ACD 5061	0673												
DATE	4/1/66	8/3/67												

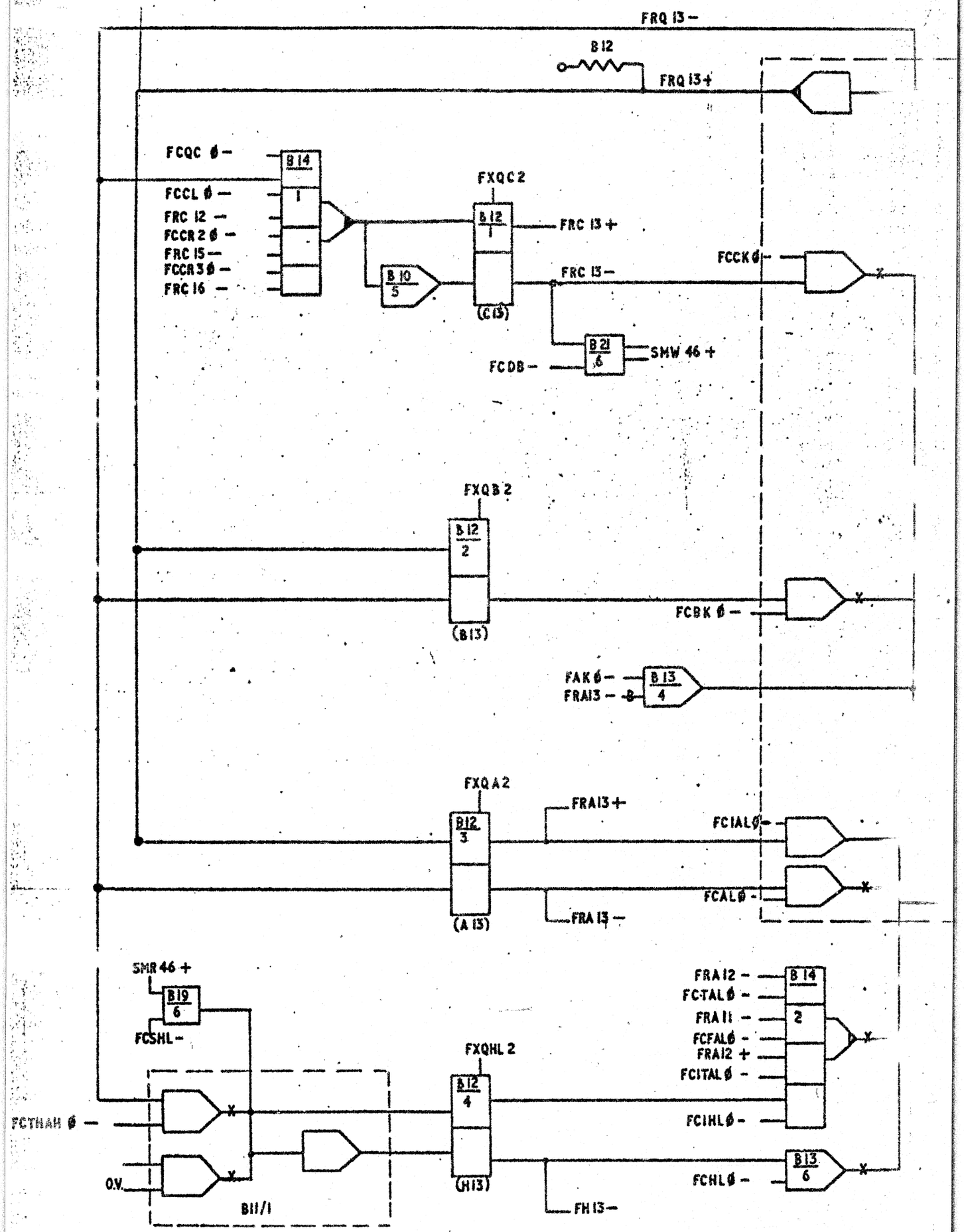

WGB 07/130

ARGUMENT SLICE FLOATING POINT. (1907)

SUB	155														
A.C.W	ACD 5061														
DATE	4.1.66														

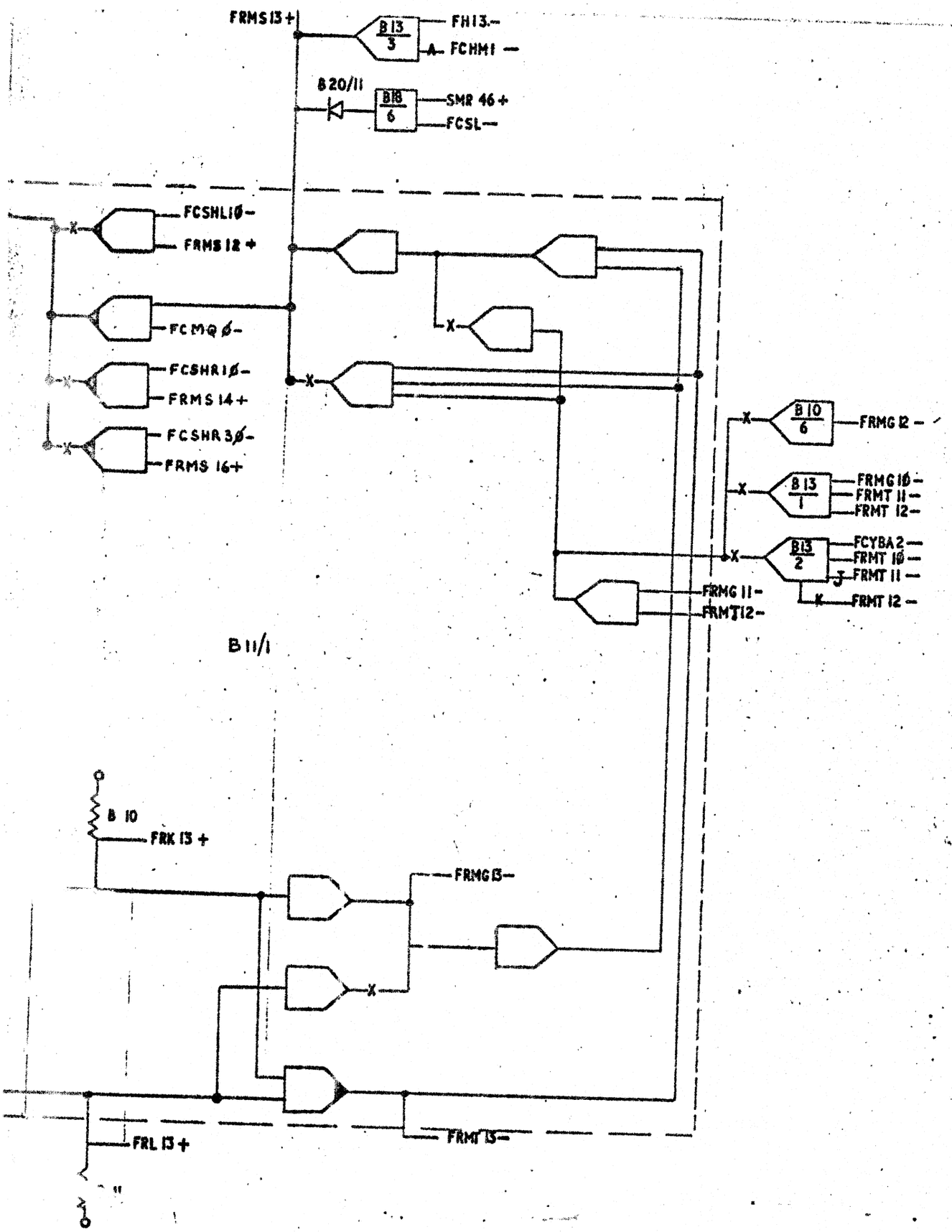

WGB 07/131

ARGUMENT SLICE FLOATING POINT 1907

SUB.	165	1												
A.C.W	NCD 5021	6/23												

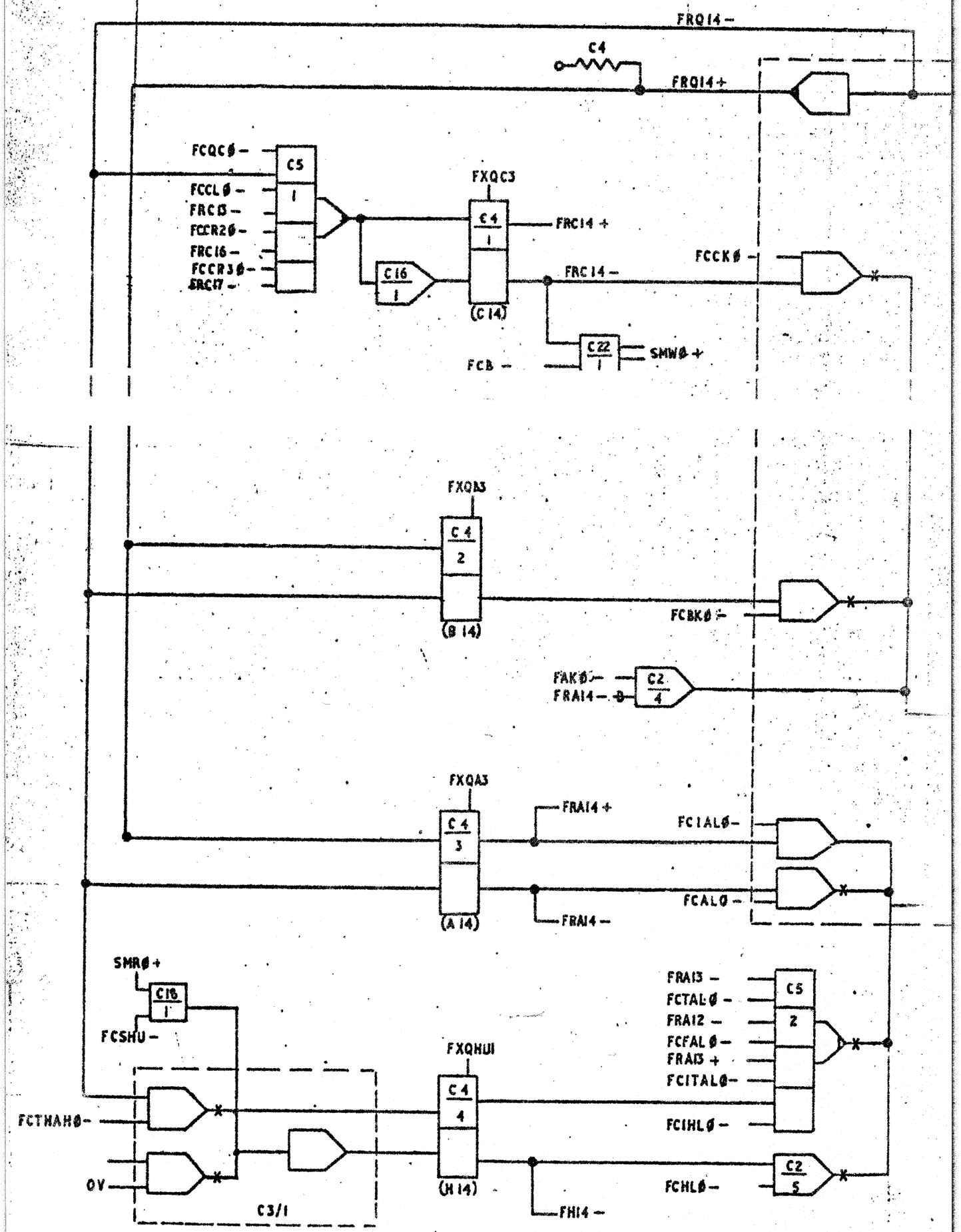

GR 07/140

ARGUMENT SLICE FLOATING POINT. (1907)

SUB	155														
A.C.W	ACD 5061														
DATE	4.1.66														

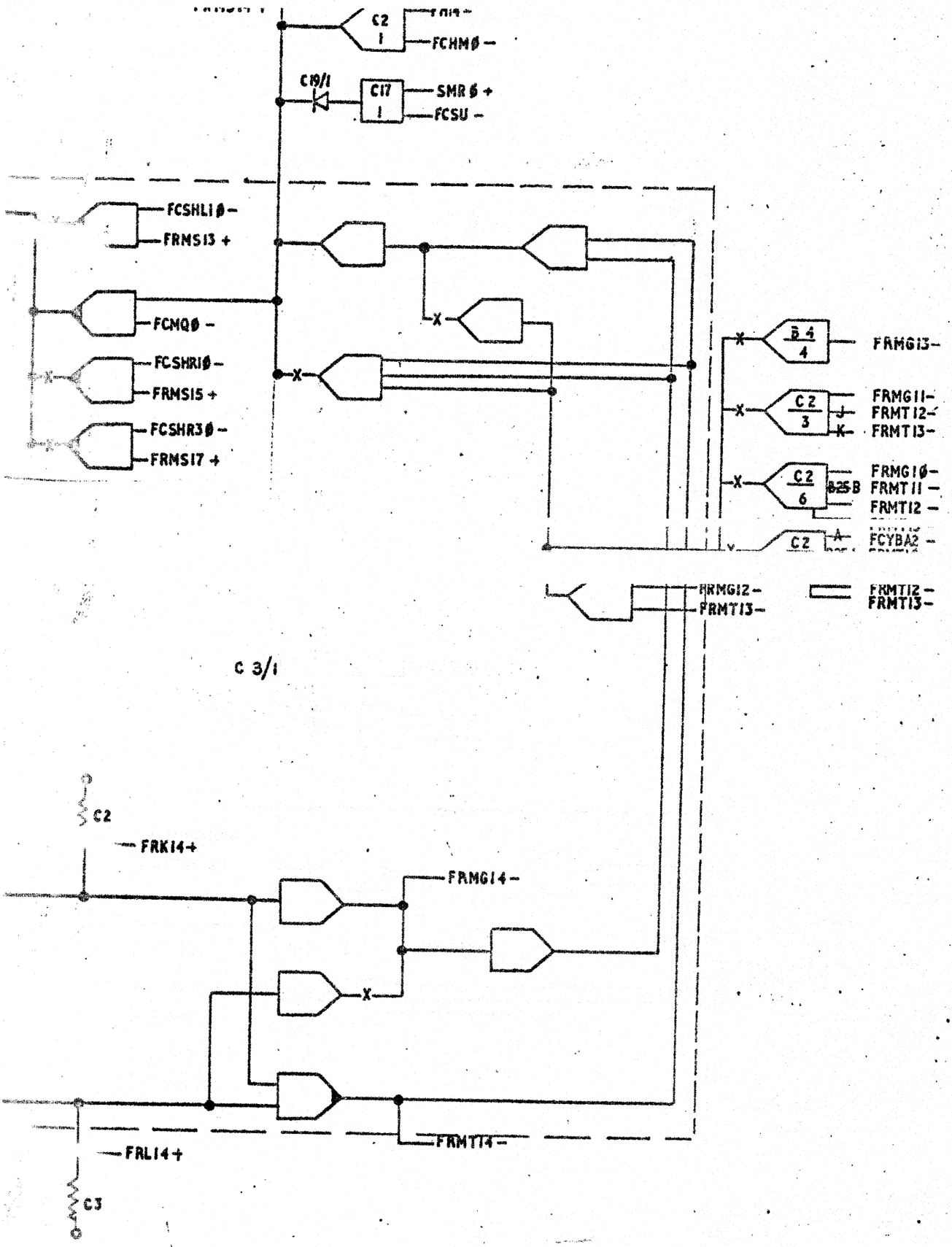

WGB 07/141

ARGUMENT SLICE FLOATING POINT (1907)

SUB.	1SS	1													
A.C.W	ACD 5061	0673													
DATE		8/1													

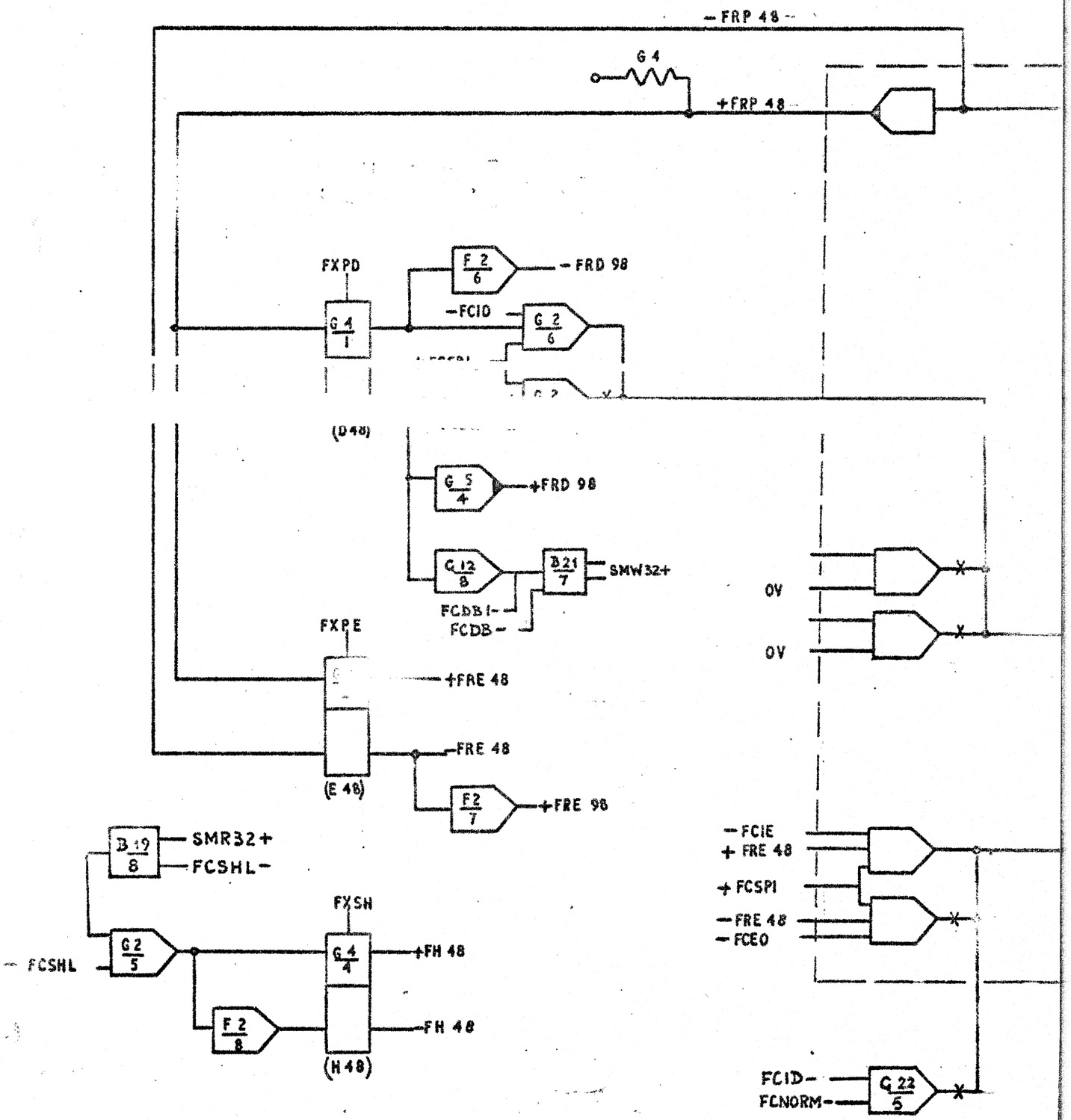

WCB 07/480

FLOATING POINT (1907) EXPONENT SLICE

SUB	ISS	1	2	3	4								
ACW	ACD 5061	ACD 5146	ACD 5318	ACD 5985	0673								
DATE	4/1/66	24/1/66	24/2/66	8/7/66	8/3/67								

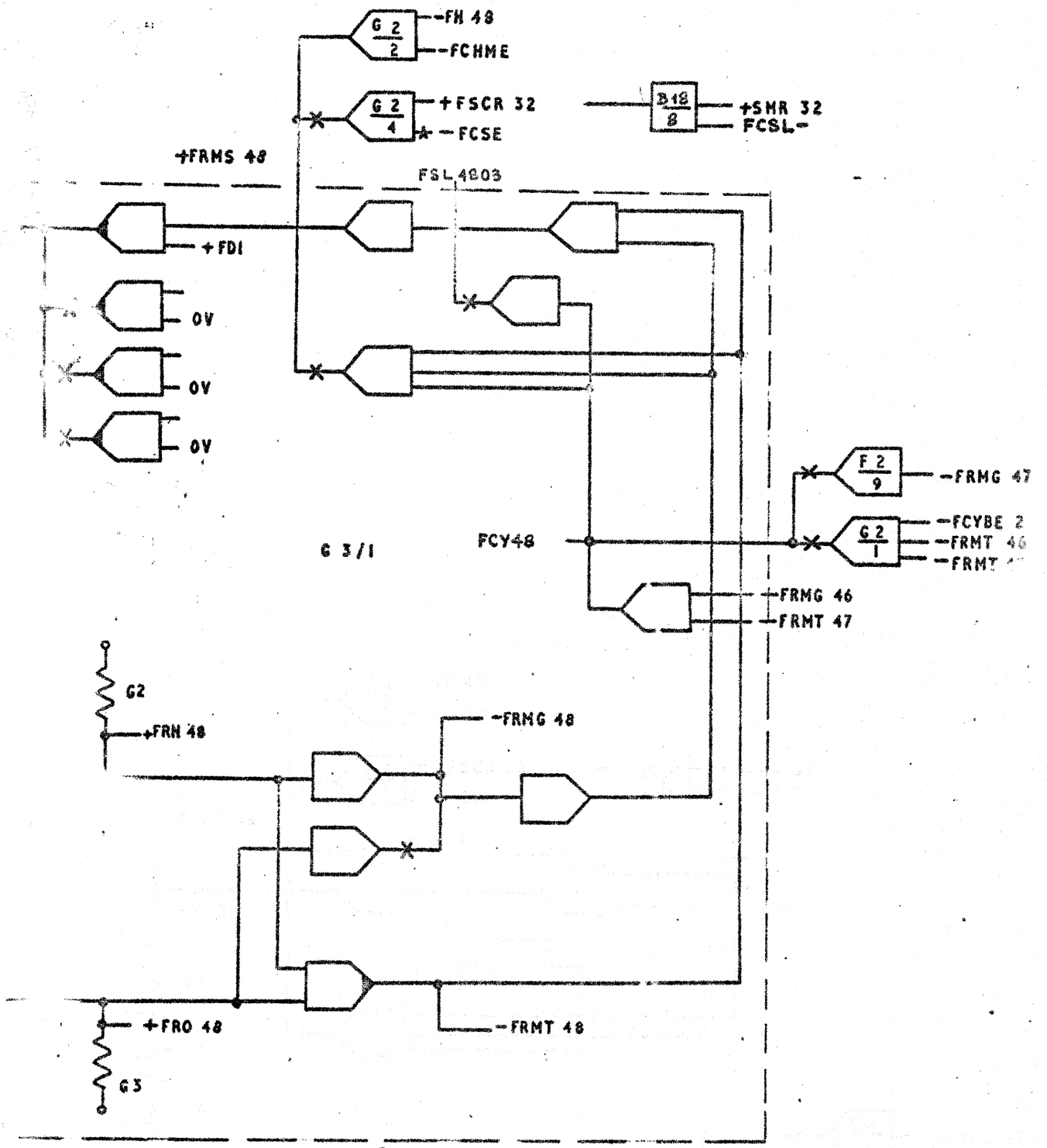

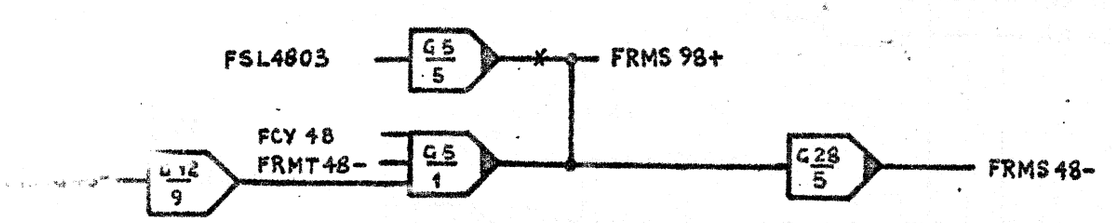

FLOATING POINT (1907) EXPONENT SLICE WGB 07/481

SUB	ISS	1	2	3										
ACD	ACD 5061	5985	6344	ACN 0673										
DATE	4/1/66	8/7/66	23/9/66	8/3/67										

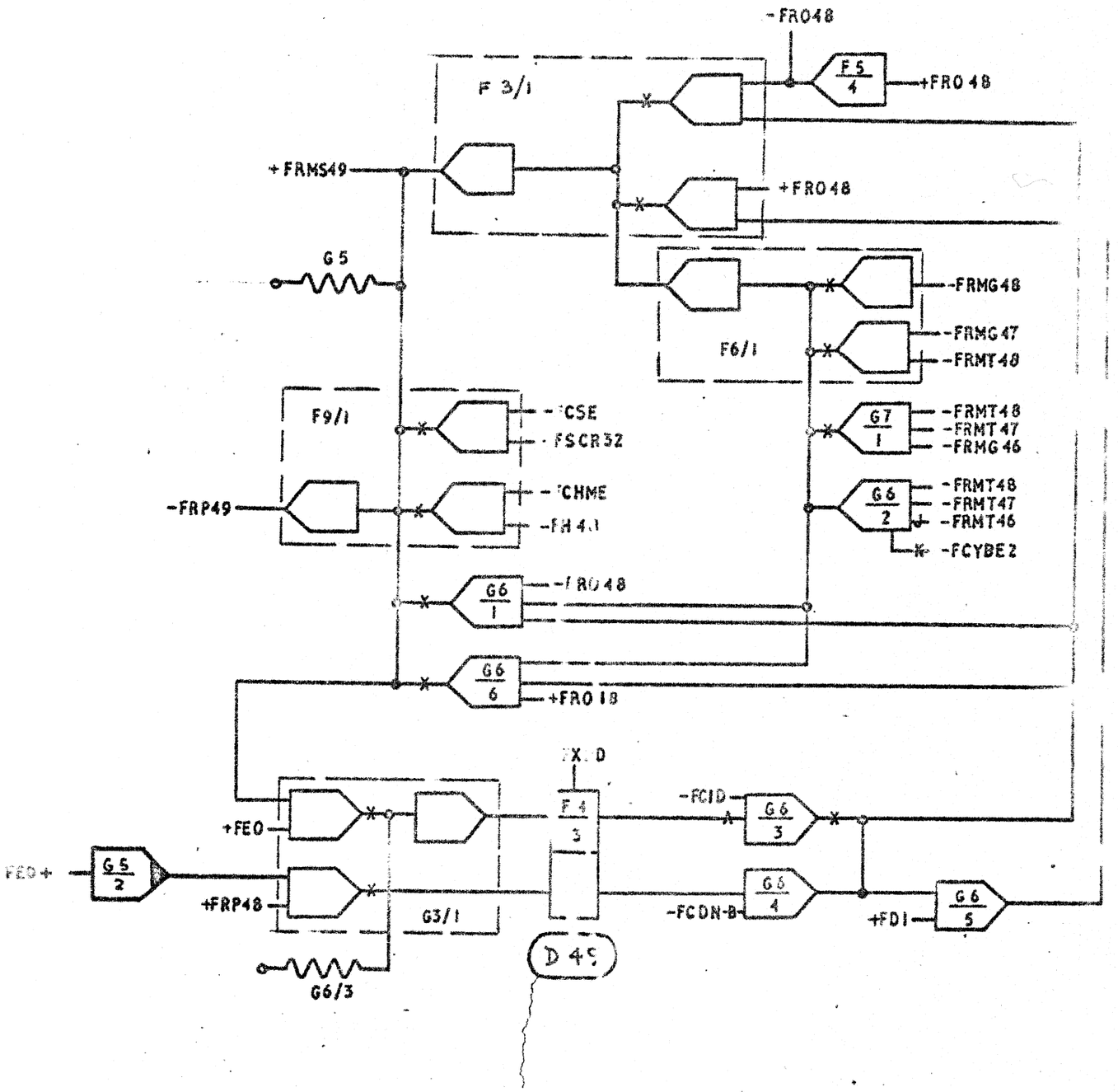

490 FLOATING POINT (1907) EXPONENT SLICE

S	ISS	1	2											
W	ACD 5061	ACD 5145	0884											
E	4/1/66	29/1/66	27/10/67											

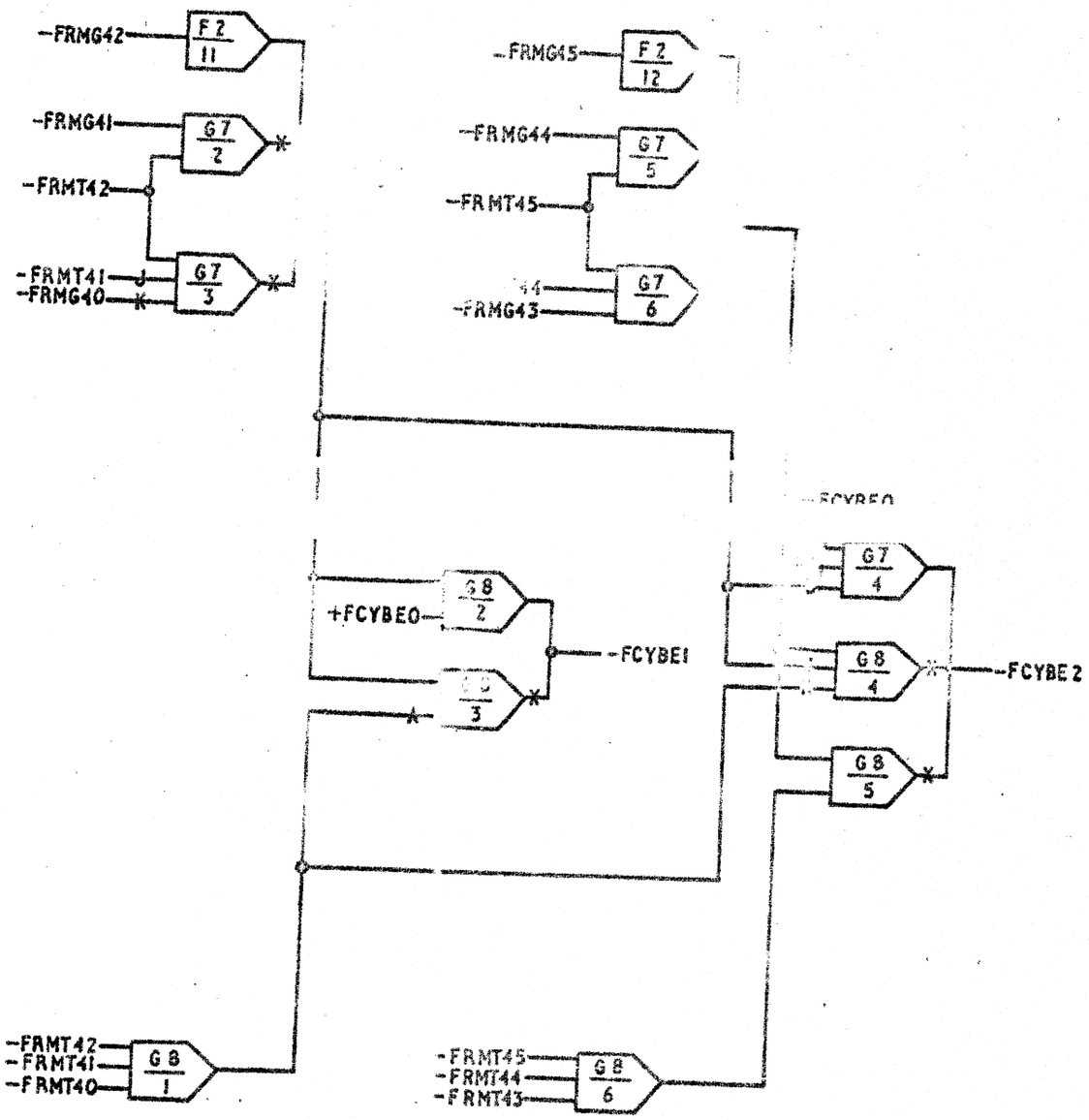

BLOCK CARRY (EXPONENT)

WGB 07/491

S	ISS													
W	ACD 5061													
E	4/1/66													

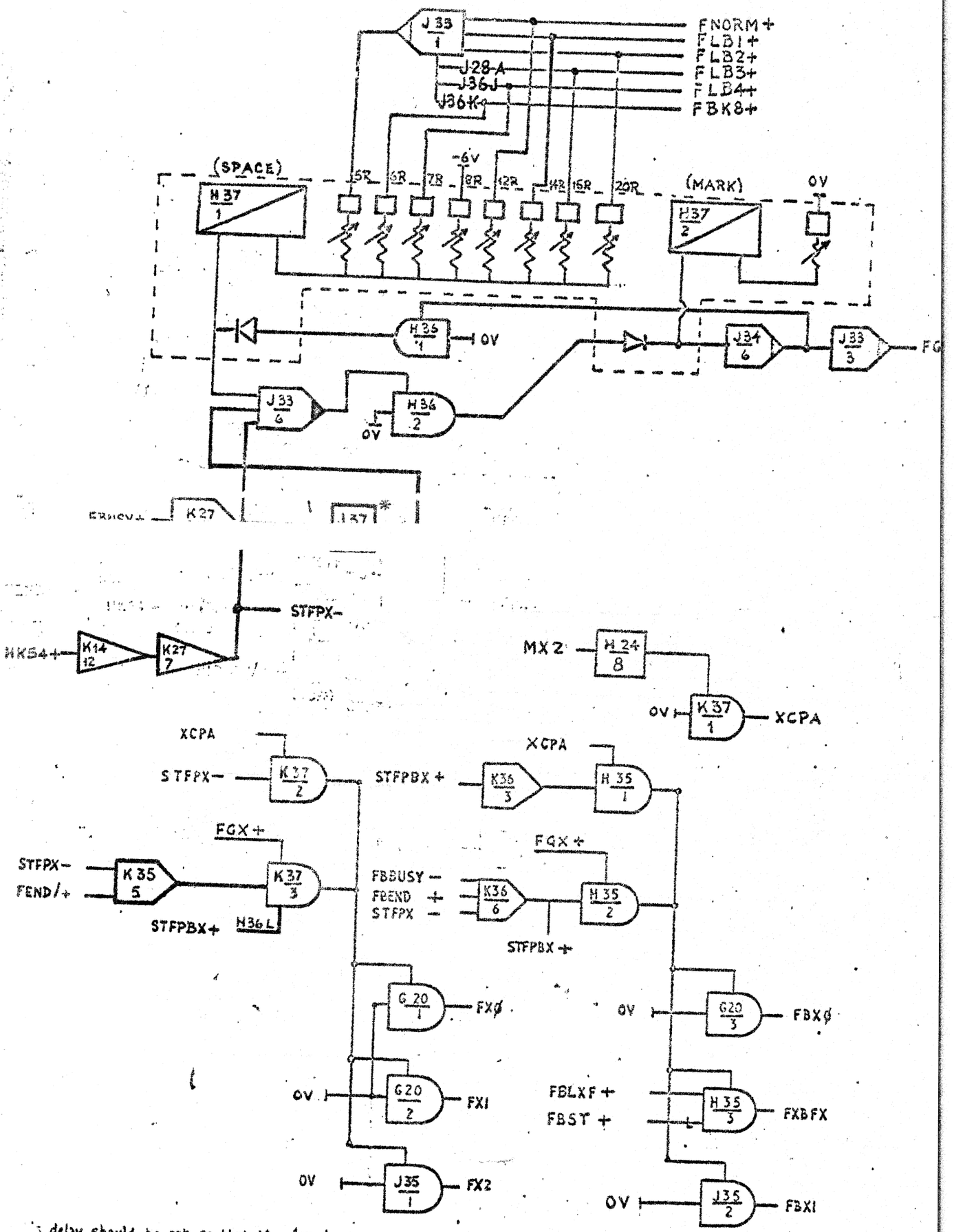

delay should be set so that the 1st. beat
a 132 has time to complete its branch.
Expected value 400-600 ns.

R 07/50b

LOATING POINT CLOCK

SUB	ISS	1	2	3	4	5	6	7	8	9	10	11	12	13
ACN	ACD 4001	ACD 5098	ACD 5146	ACD 5318	ACD 5925	ACD 6544	0600	0641	0673	0686	0738	0799	0854	098
DATE	1/1/66	16/1/66	24/1/66	24/2/66	8/7/66	23/9/66	7/12/66	23/1/67	8/2/67	5/4/67	15/5/67	7/7/67	15/9/67	22/3/68

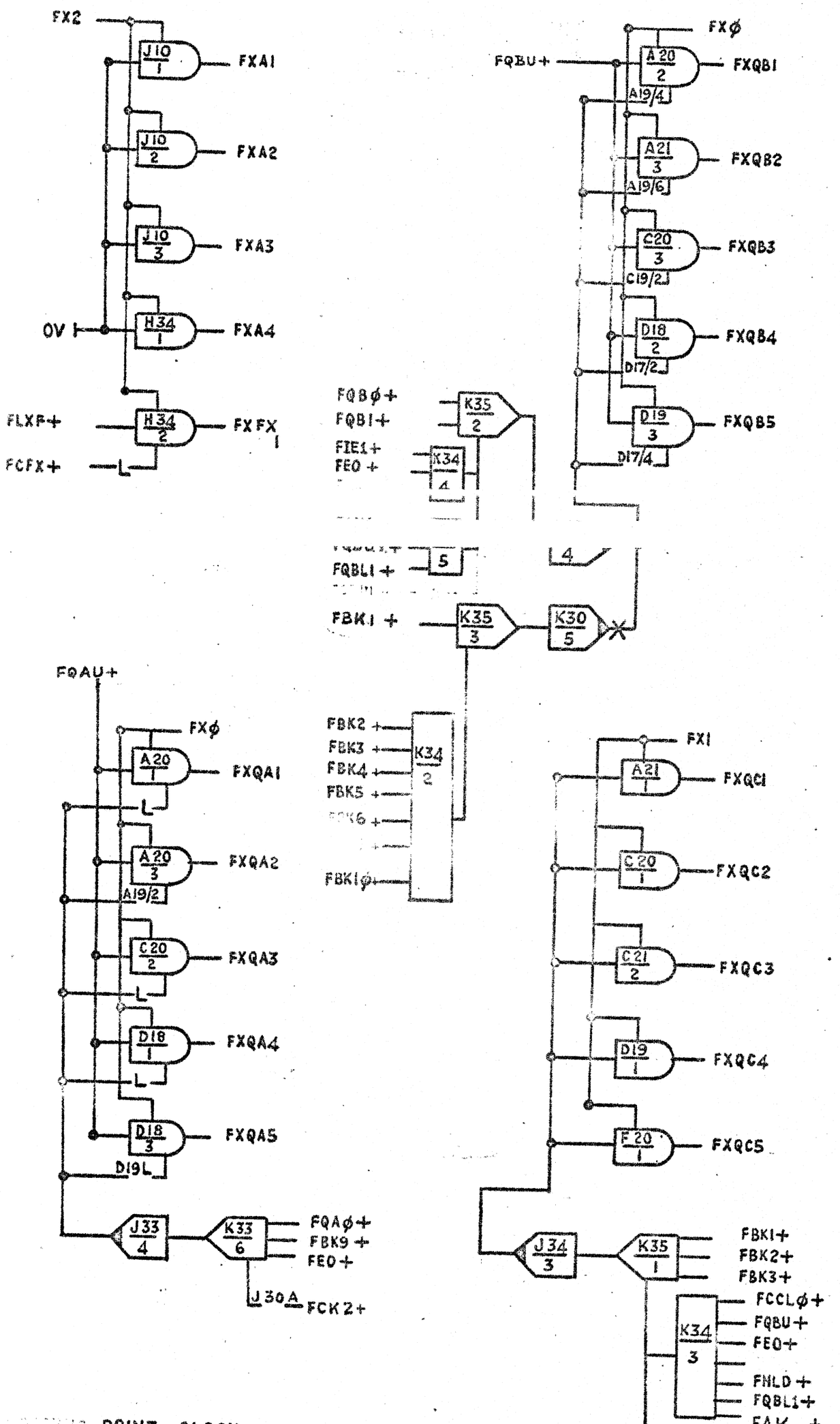

POINT CLOCK

W G B 07/50

	ISS	1	2	3	4	5	6	7
ACD.	ACD 5061	ACD 5098	ACD 5145	5767	5985	ACW 0673	ACW 0820	ACW 0854
DATE	4/1/66	14/1/66	24/1/66	20/5/66	8/7/66	8/3/67	12/8/67	15/9/67

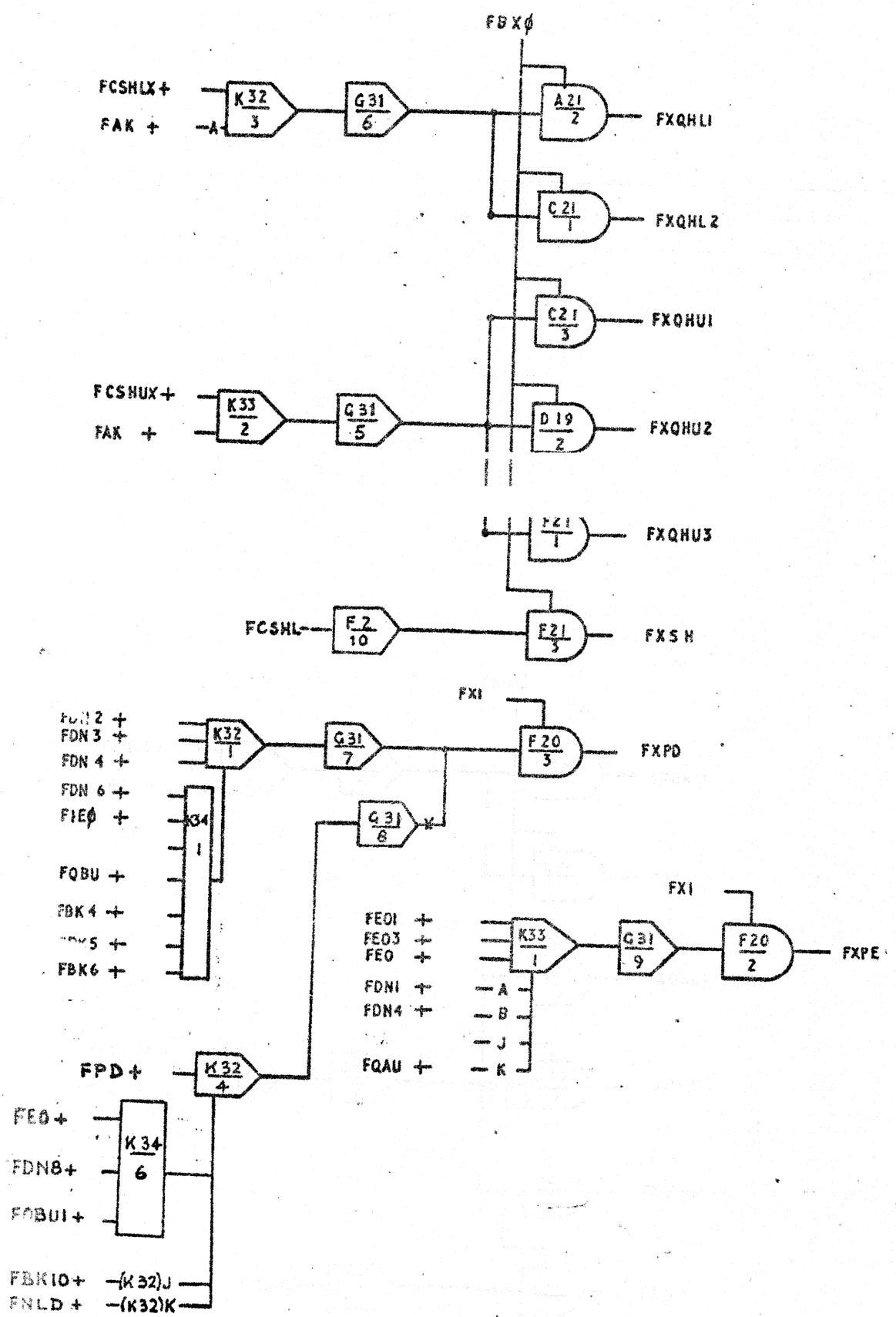

WCB 07/502

FLOATING POINT CLOCK

SUB	ISS	1	2	3	4	5	6
ACD	ACD 5061	ACD 5098	ACD 5145	5767	5985	ACW 0673	ACW 0854
[illegible]	[illegible]/1/66	14/1/66	24/1/66	20/5/66	8/7/66	8/3/67	15/9/67

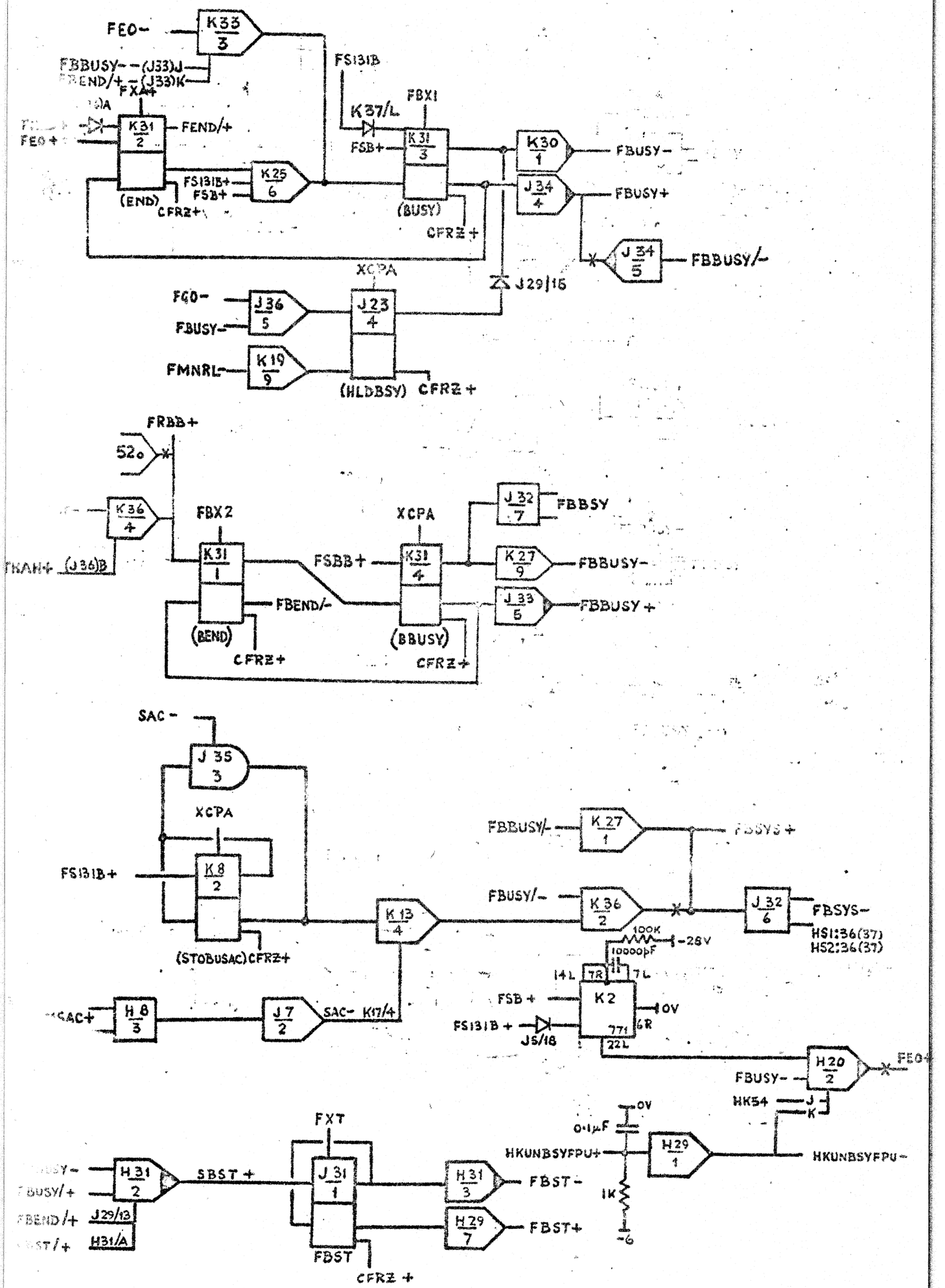

FLOATING POINT BUSY

W G B 07/50$_3$

SUB	1SS	1	2	3	4	8	9	10	11	12	13	14	15	16
A.C.W.	ACD 5061	ACD 5098	ACD 5318	ACD 5985	ACD 6344	0600	0673	0686	0726	0738	0742	0765	0799	0854
DATE	1/1/66	14/1/66	24/2/66	8/7/66	23/9/66	7/12/66	8/3/67	5/4/67	5/5/67	15/5/67	19/5/67	9/6/67	17/7/67	15/9/67

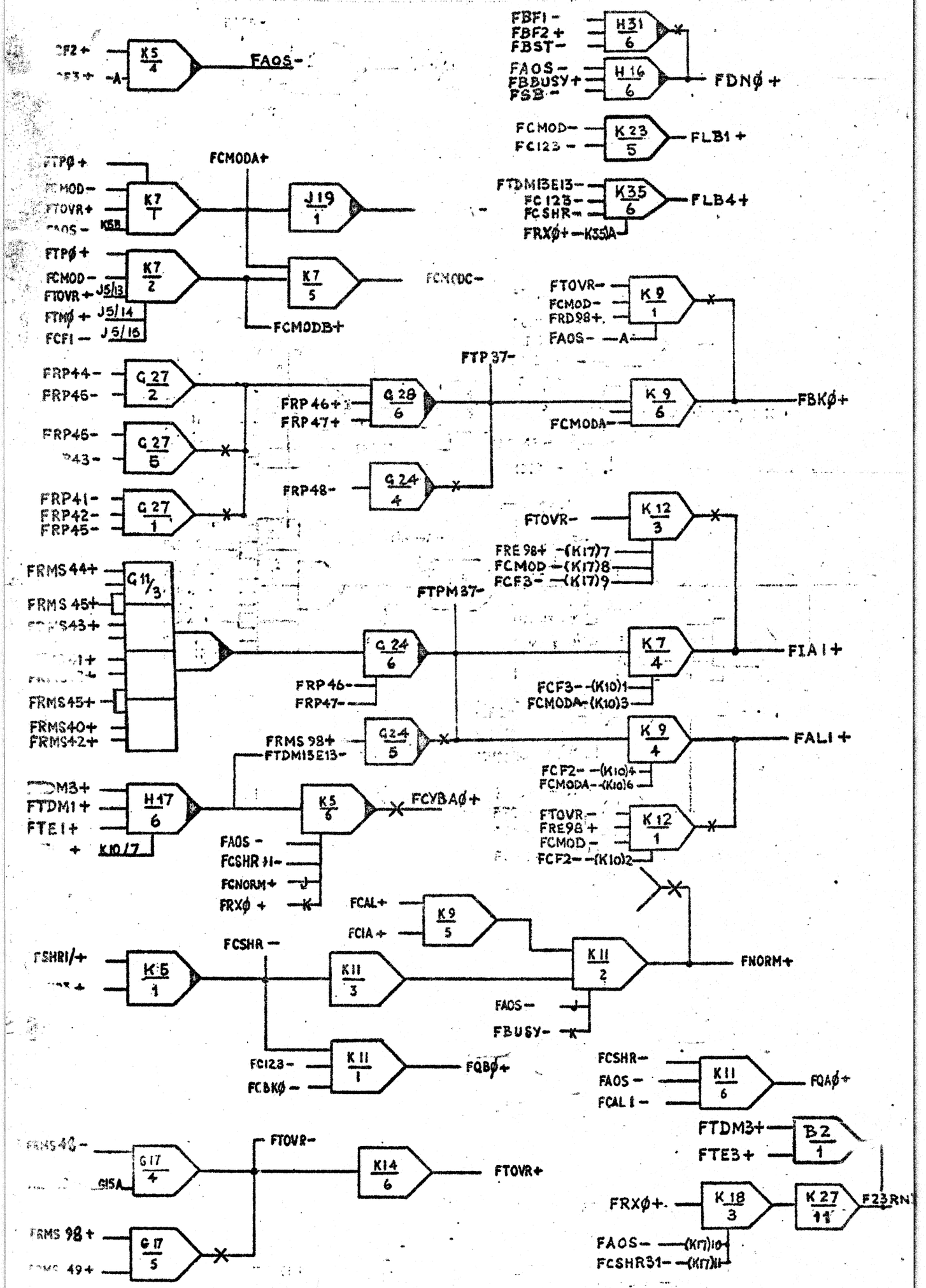

WGB 07/510

FLOATING POINT ADD / SUBTRACT

SUB	ISS	1	2	3	4	5	6	7	8	9					
A.C.D	ACD 5061	ACD 5098	ACD 5145	ACD 5313	5767	5985	[illegible]	ACDW 5600	0673	0686					
DATE	4/1/66	14/1/66	24/1/66	24/2/66	20/5/66	8/7/66	[illegible]/9/66	7/12/66	8/3/67	5/4/67					

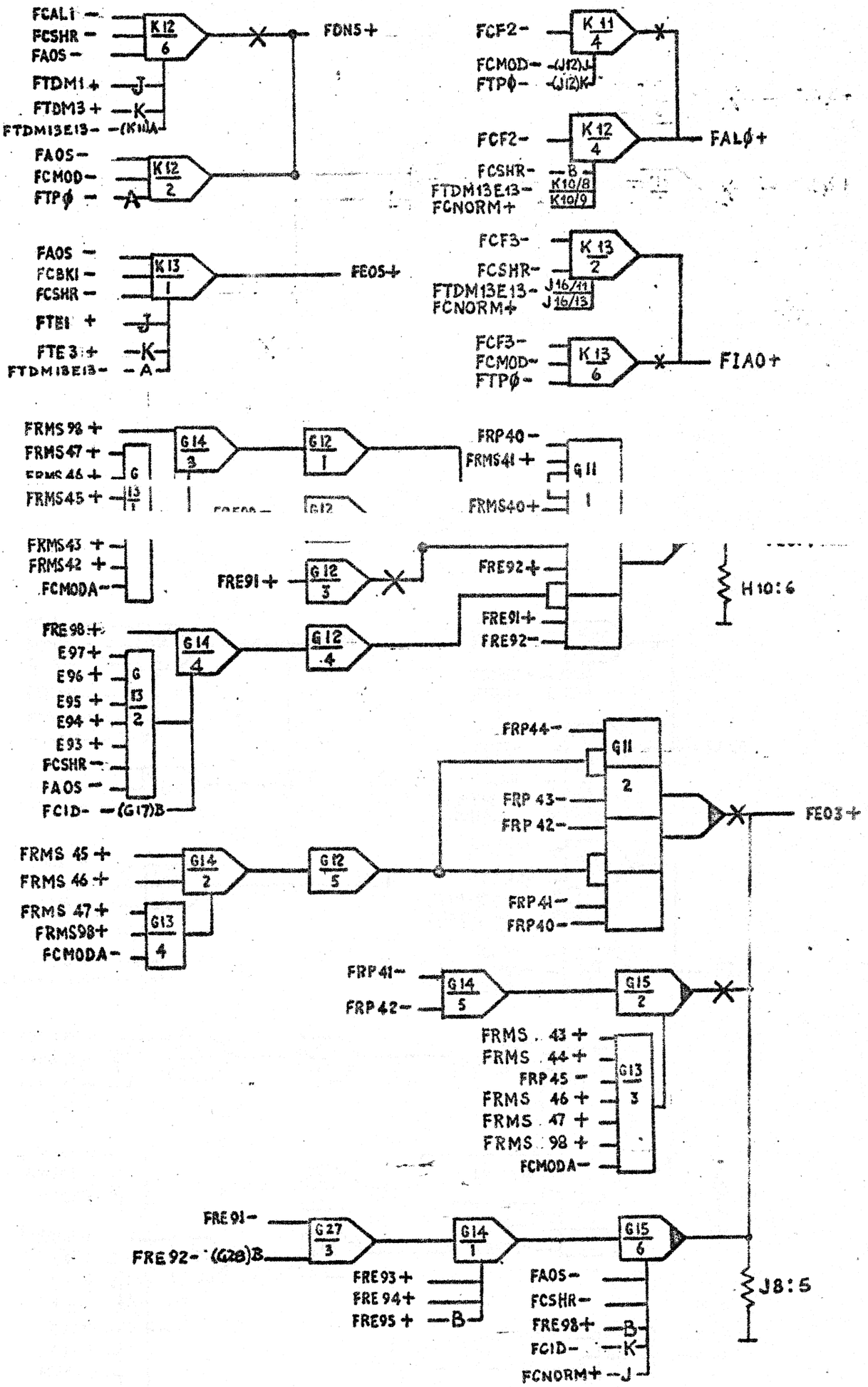

FLOATING POINT ADD/SUBTRACT

W G B 07/51₁

SUB.	ISS	1	2	3
A.C.W.	ACD 5061	ACD 5098	ACD 5985	0673
DATE.	4/1/66	14/1/66	8/7/66	8/3/67

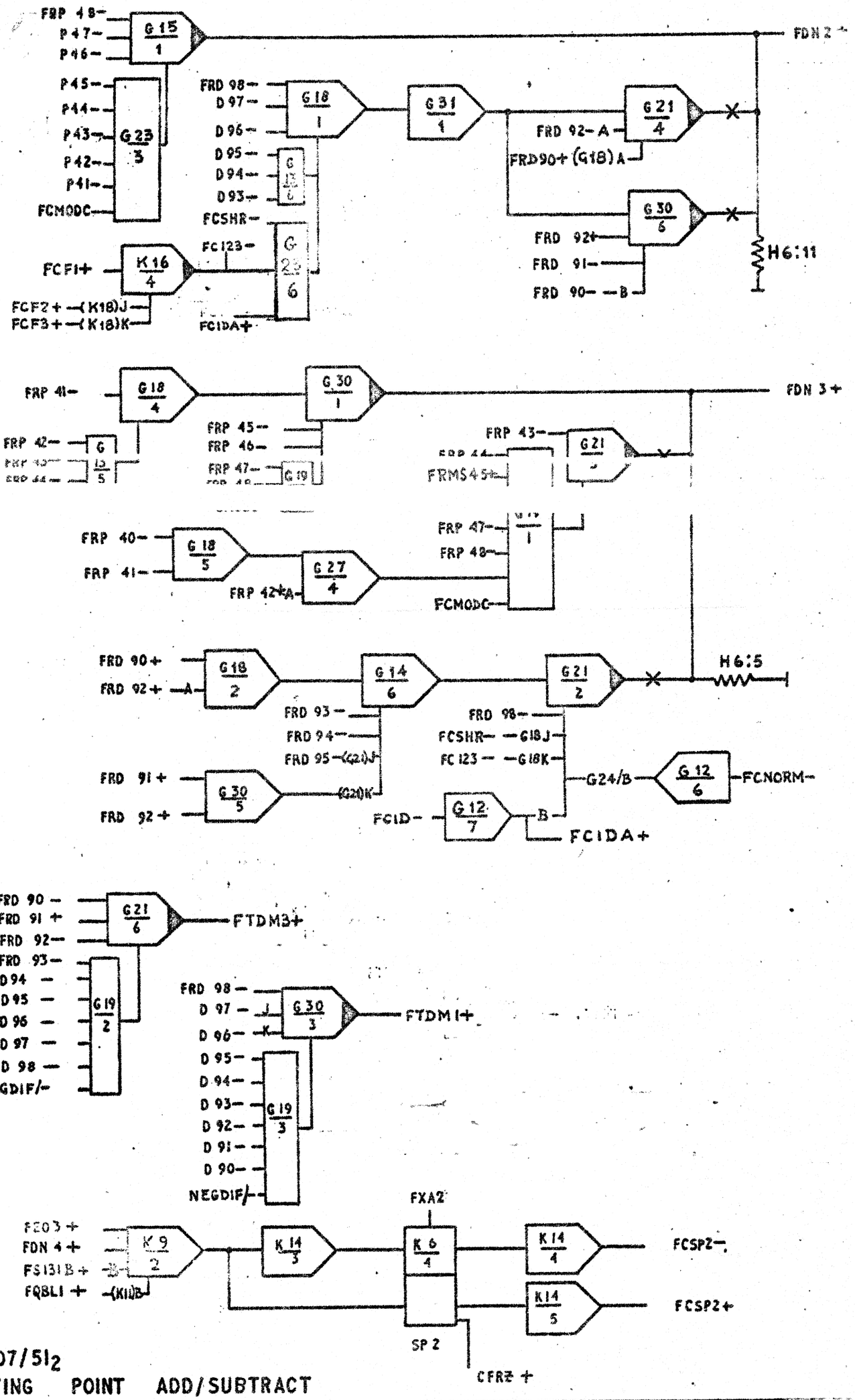

WGB 07/5I2

FLOATING POINT ADD/SUBTRACT

SUB	ISS	1	2	3	4	5									
ACD	ACD 5066	ACD 5098	ACD 5318	5767	5985	ACW 0673									
DATE	4/1/66	14/1/66	24/2/66	20/5/66	8/7/66	8/3/67									

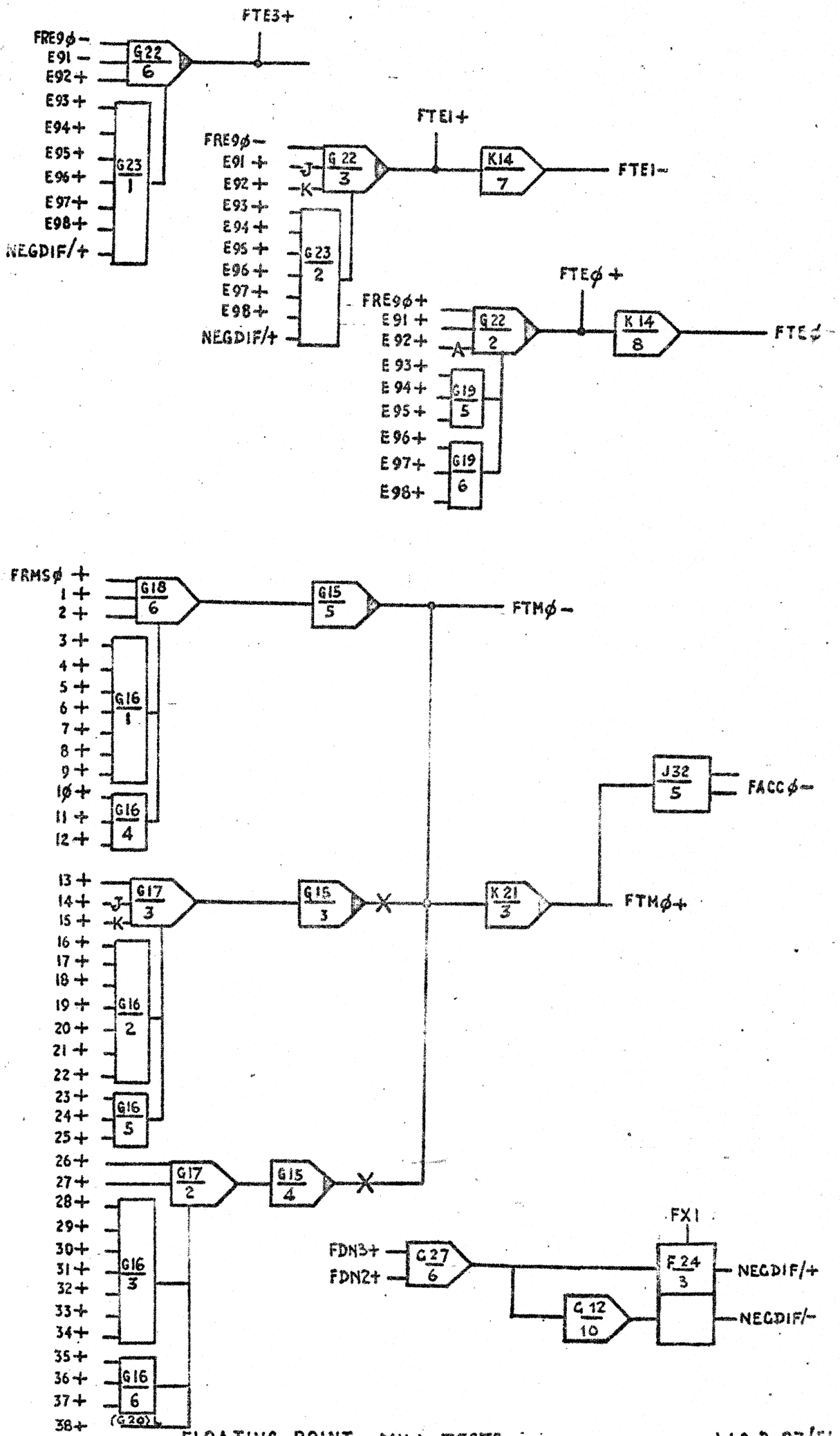

FLOATING POINT MILL TESTS

WG B.07/5i3

SUB	ISS	1	2	3	4										
ACD	ACD 5061	5985	6344	ACW 0673	ACW 0820										
DATE	4/1/66	8/7/66	23/9/66	8/3/67	14/8/67										

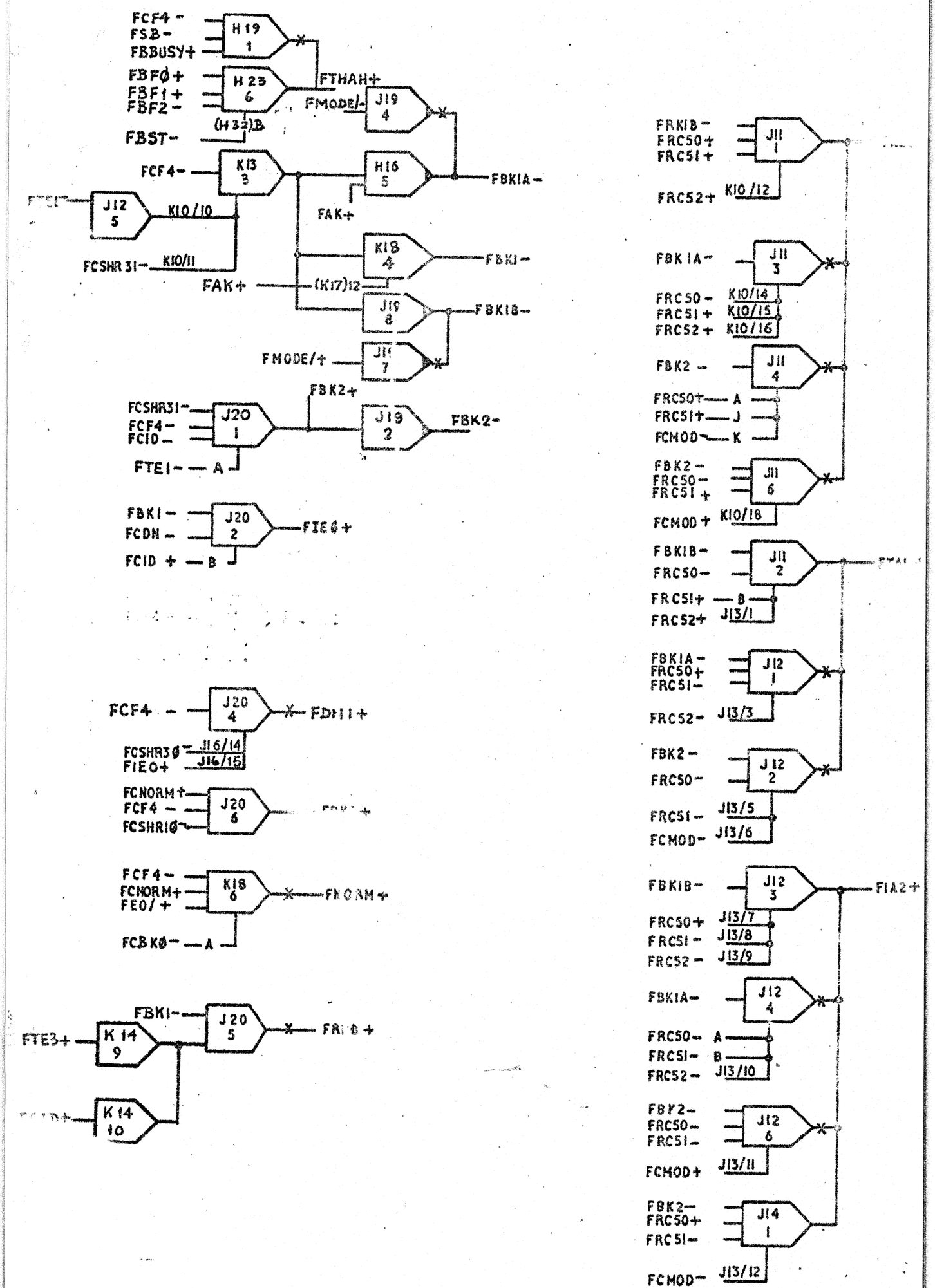

WGB07/52o FLOATING POINT MULTIPLICATION

SUB.	ISS	1	2	3	4	5	6
A.C.D.	5061	5145	5318	5767	5985	6344	6 CW 6254

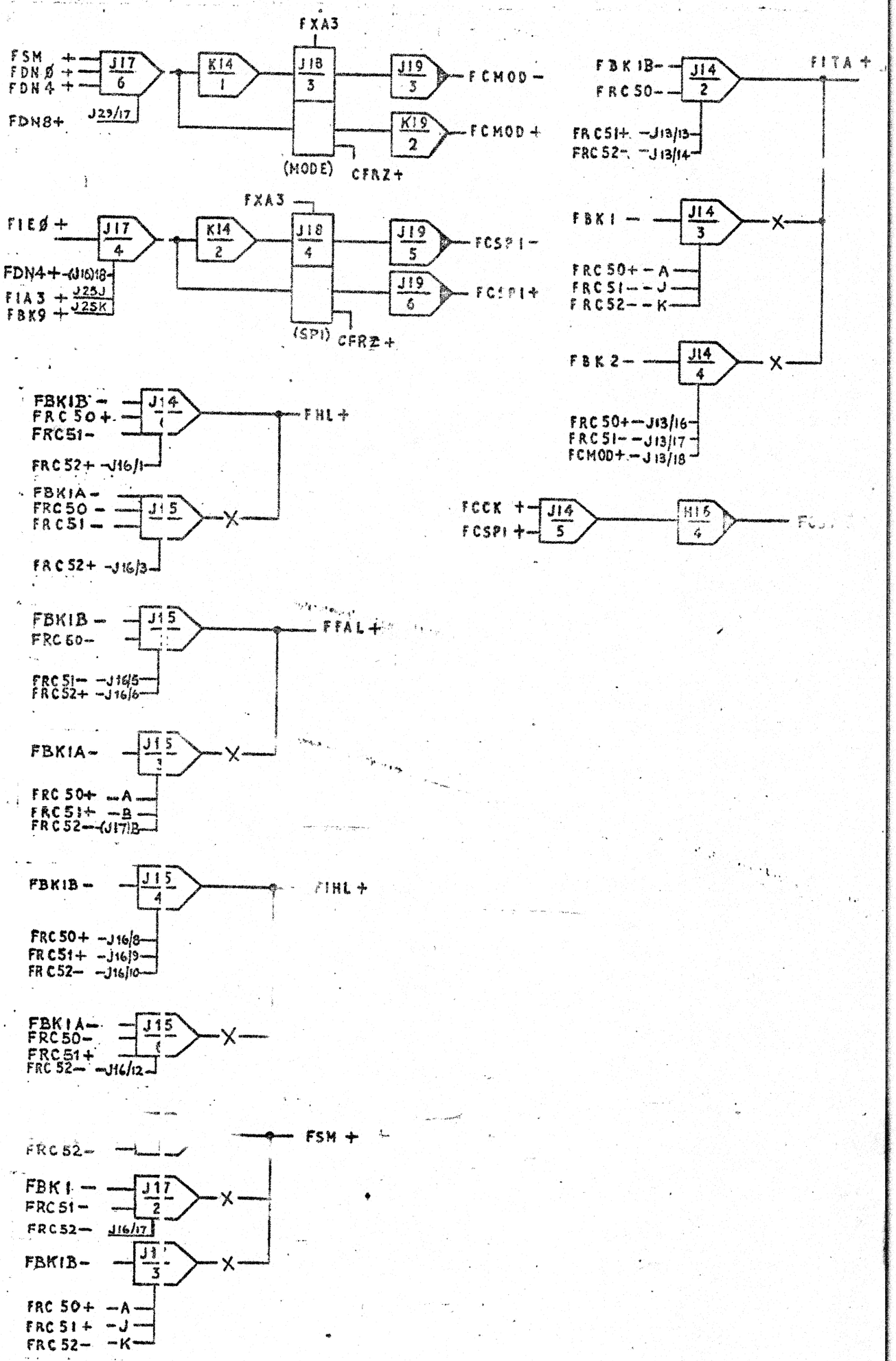

TING POINT MULTIPLICATION

WGB 07/52₁

JB	ISS	1	2	3	4
ACD	ACD 5061	ACD 5098	ACD 5145	ACD 5318	5767

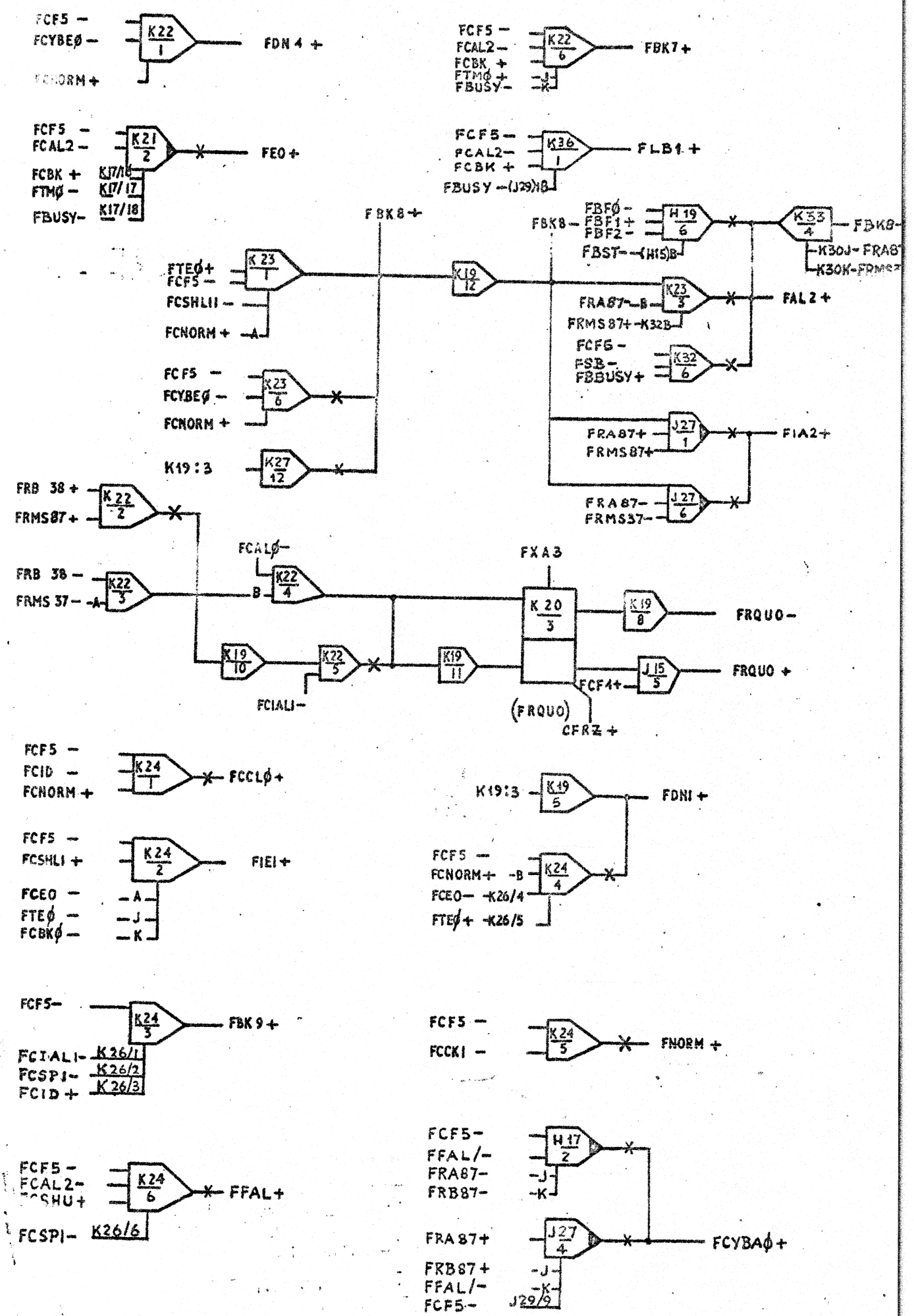

WGB 07/530

FLOATING POINT DIVISION

SUB.	ISS	1	2	3	4	5	6	7							
A.C.D	ACD 5061	ACD 5145	ACD 5318	5767	5985	6344	0673	0686							
DATE															

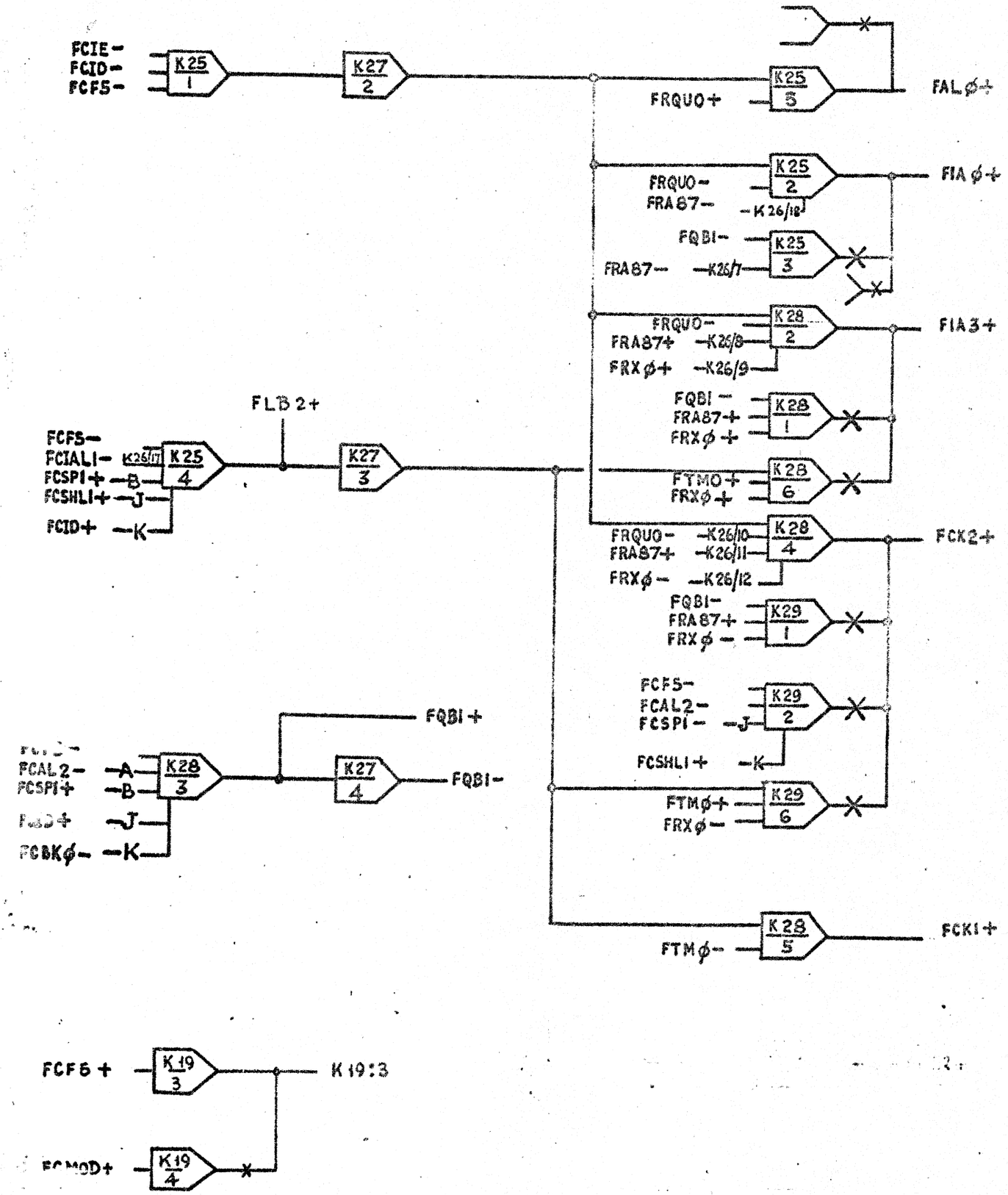

FLOATING POINT DIVISION

W G B 07/53

SUB	ISS	1	2	3	4										
ACD	ACD 5061	ACD 5145	5767	6344	0673										
DATE	4/1/66	24/1/66	20/5/66	23/9/66	8/3/67										

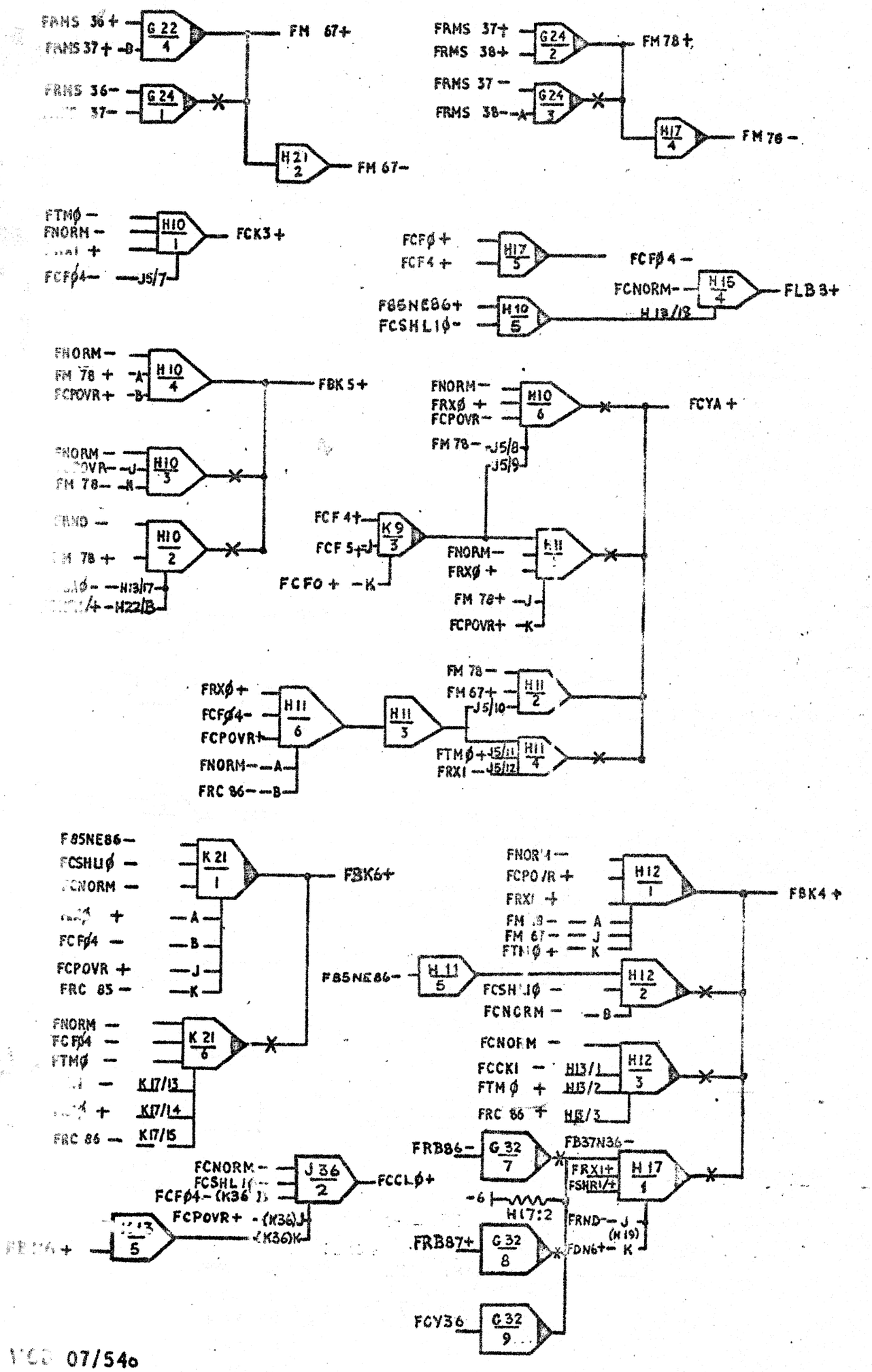

YCD 07/54o

FLOATING POINT NORMALISE

	ISS	1	2	3	4	5	6									
A.C.D.	ACD 5061	ACD 5318	5761	5985	6344	0613	ACW 0820									
DATE	4/1/66	24/2/66	20/5/66	8/7/66	23/9/66	8/4/67	14/8/67									

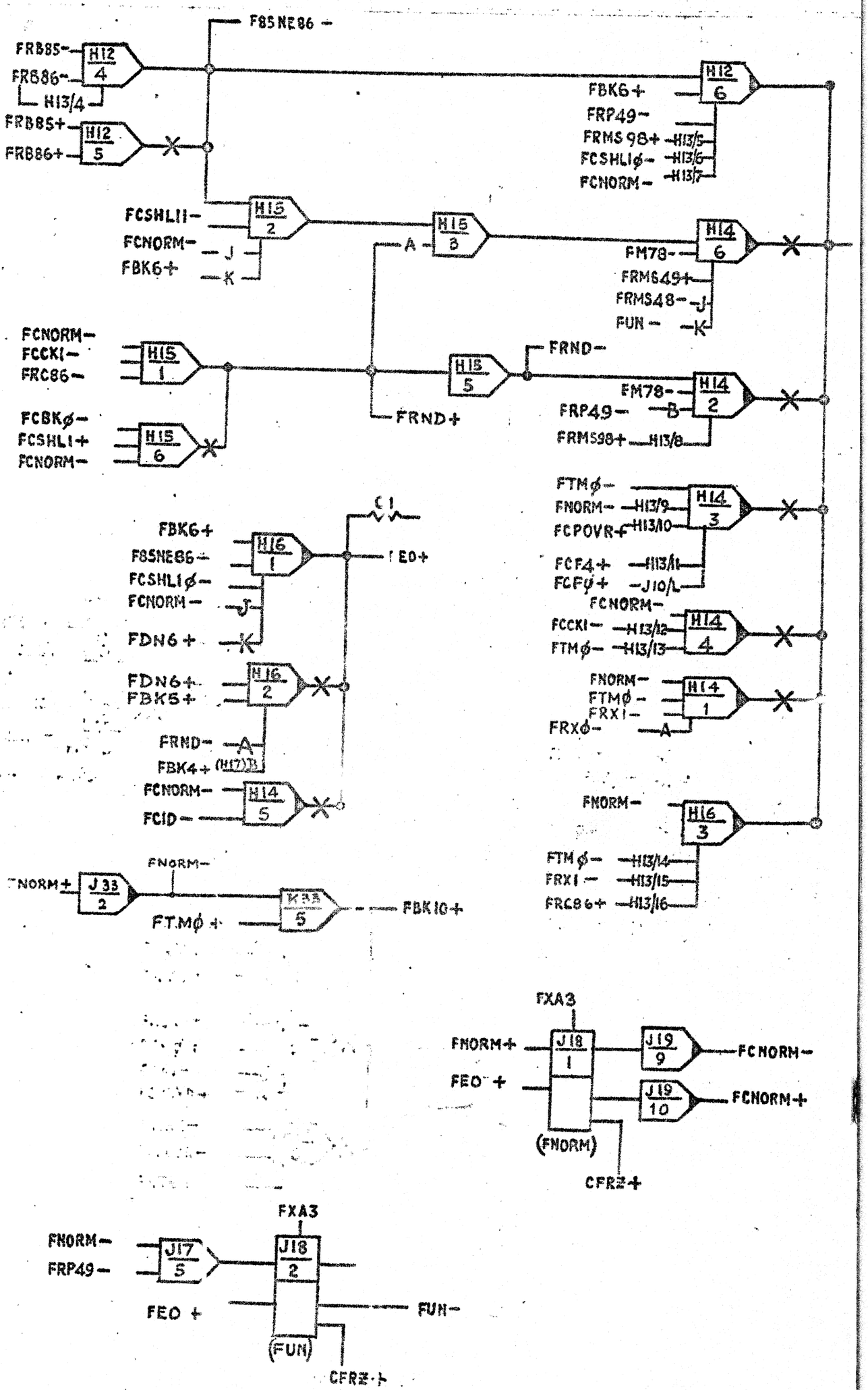

FLOATING POINT NORMALISE

WGB 07/54.

ISS	1	2	3	4	5	6

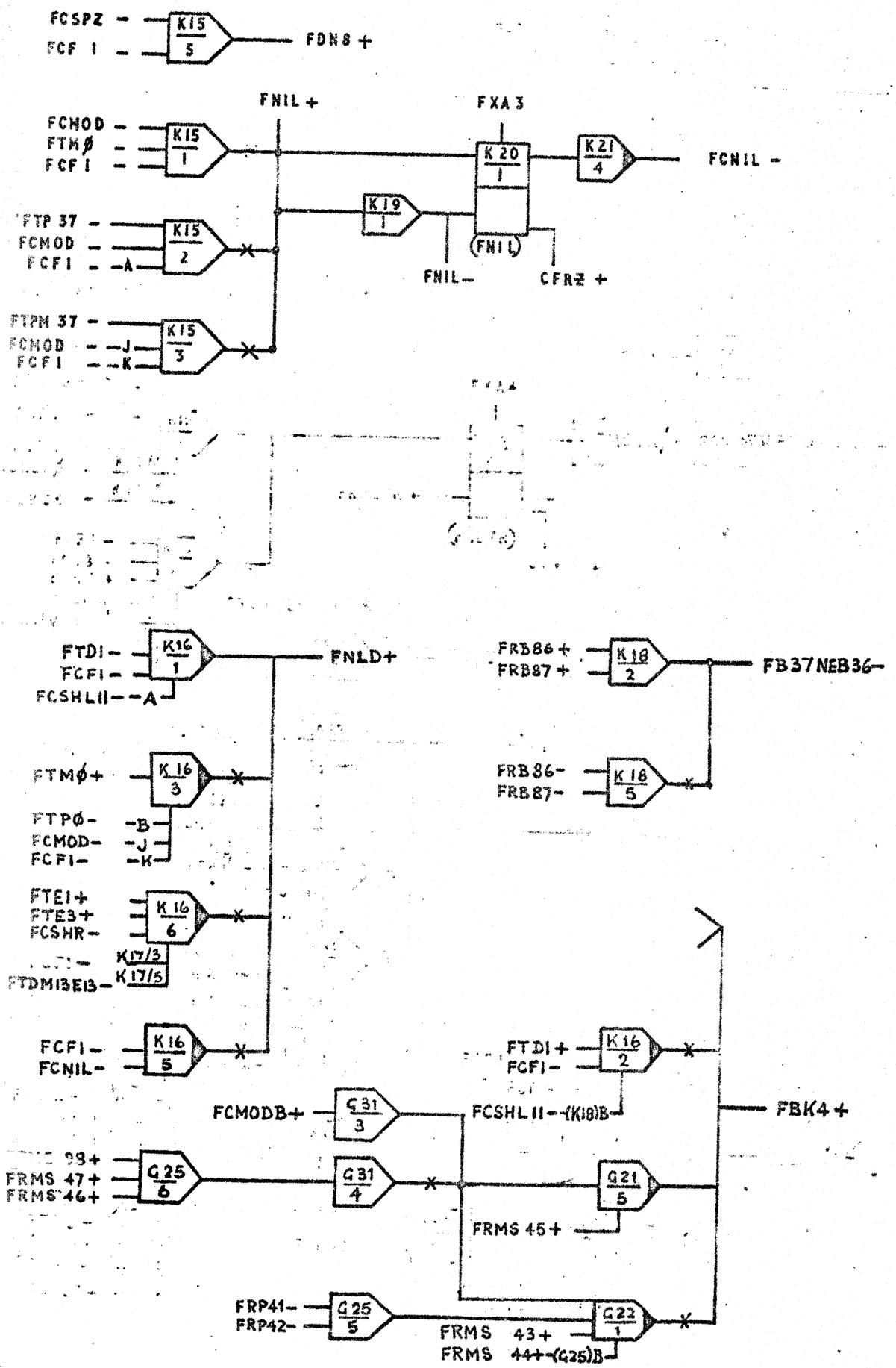

WGB 07/55.
CONVERT FLOATING TO FIXED

SUB	ISS	1	2	3	4	5	6	7							
	ACD 5061	ACD 5098	ACD 5145	ACD 5318	5767	5985	ACW 0673	ACW 0854							
DATE	4/1/66	14/1/66	24/1/66	24/2/66	20/5/66	8/7/66	8/3/67	15/9/67							

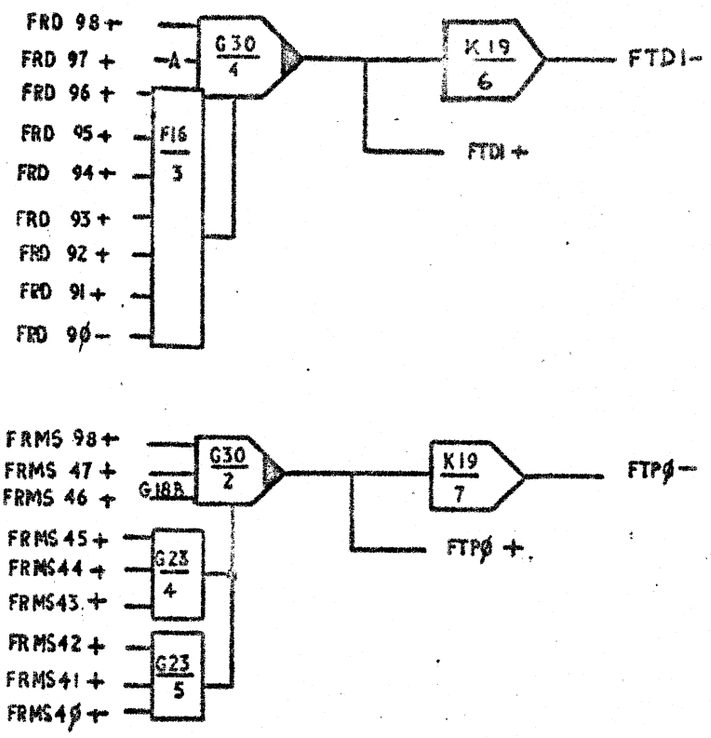

FLOATING POINT MILL TESTS

WCB 07/55.

SUB	ISS	1	2	3										
ACD	ACD 5061	5985	6344	ACW 0673										
DATE	4/1/66	8/7/66	23/9/66	8/3/67										

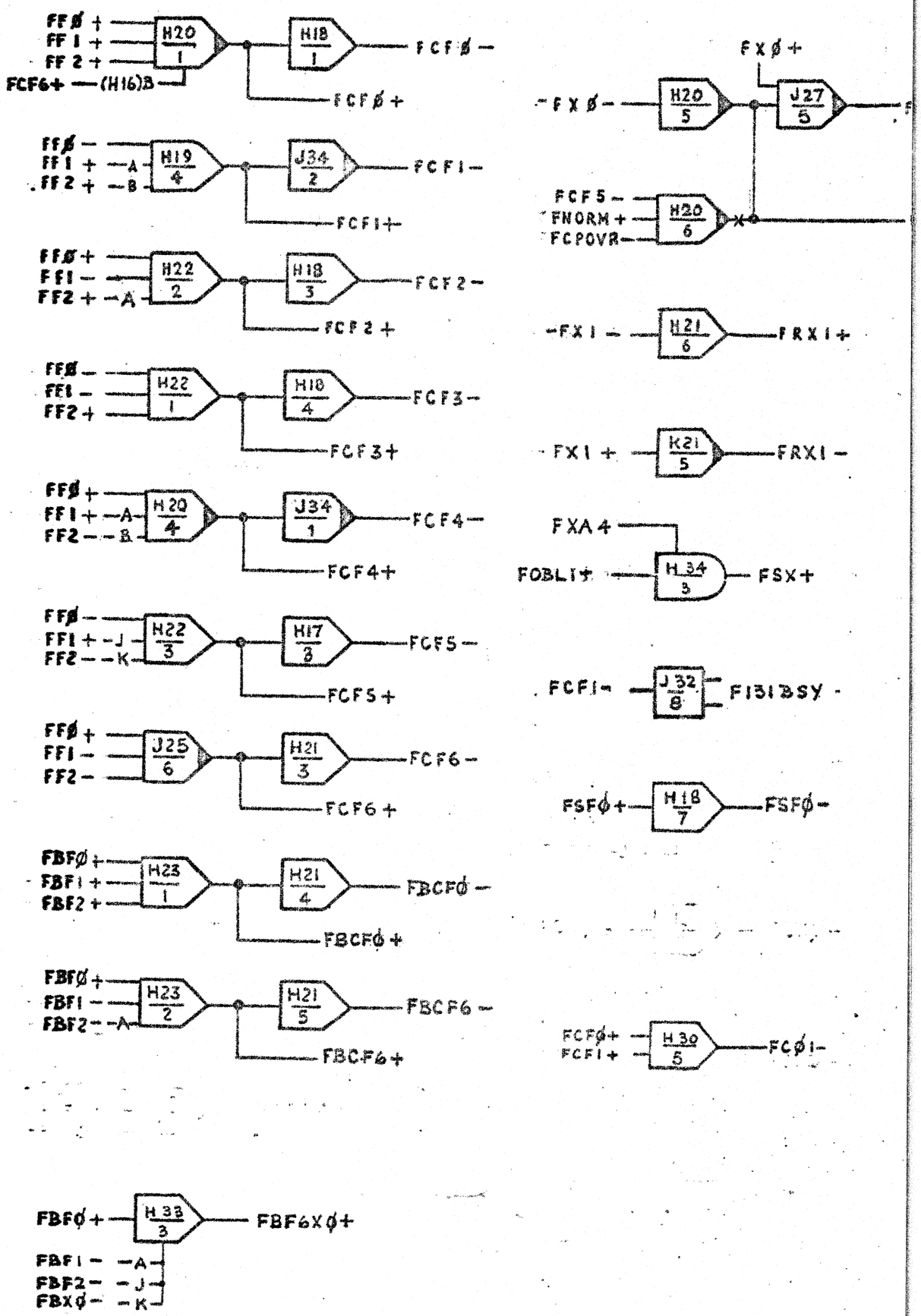

FLOATING POINT FUNCTION DECODING.

WGB 07/561

SUB	ISS	1	2	3	4	5	6	7						
ACD	ACD 5061	ACD 5098	ACD 5145	ACD 5318	5767	5985	6344	ACN 0600						
DATE	4/1/66	14/1/66	24/1/66	24/2/66	20/5/66	8/7/66	22/9/66	7/12/66						

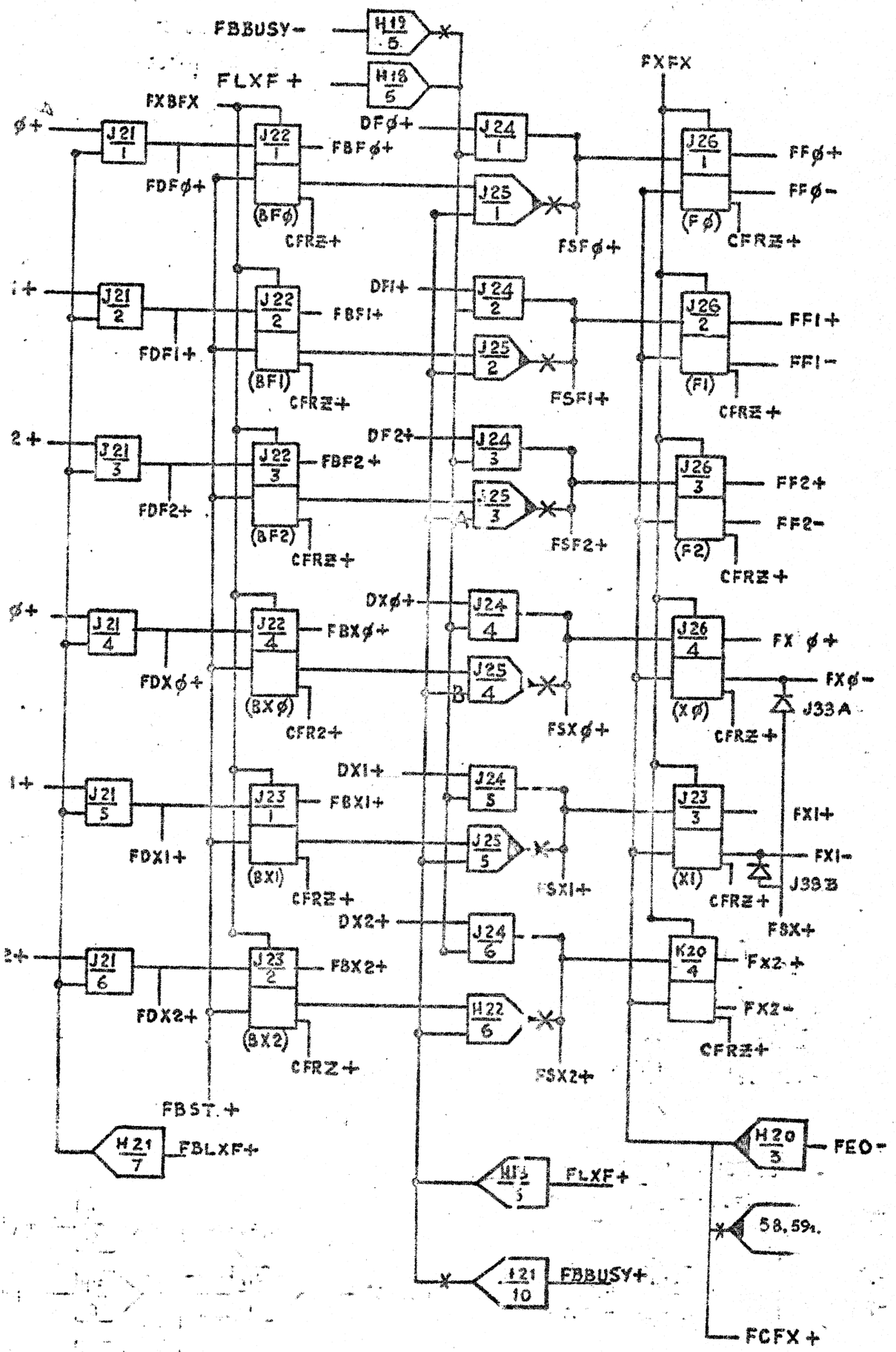

W. 1 .07/56 o

FLOATING POINT F & X REGISTERS

ISS	1	2	3
RCD	RCD	5985	ACW

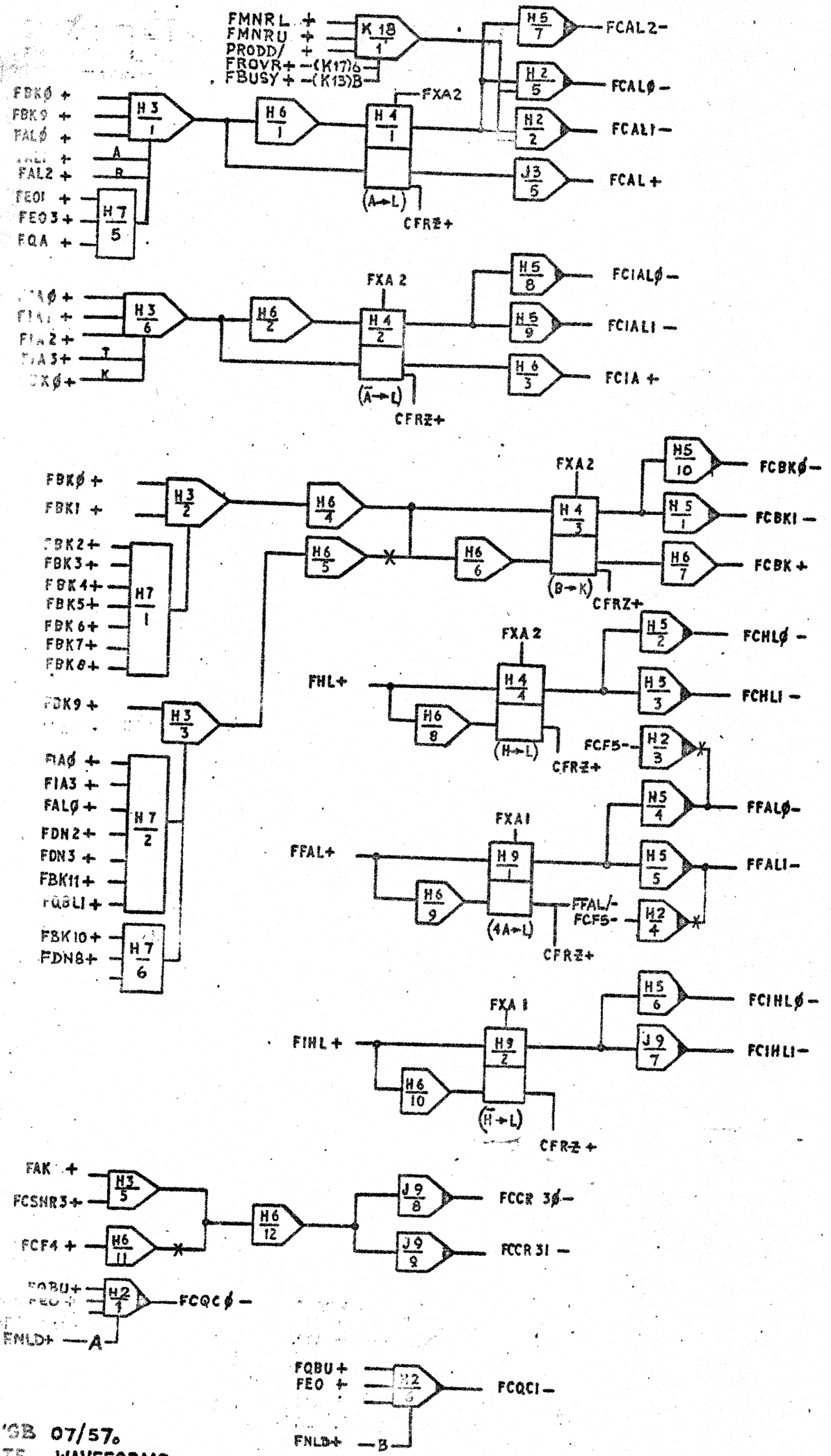

GB 07/57.

TE WAVEFORMS

ISS	1	2	3	4	5	6	7	8	9	10
ACD 5061	ACD 5098	ACD 5146	ACD 5318	5767	5985	6344	ACW 0600	ACW 0673	ACW 0686	ACW 0851
14/11/66	14/11/66	24/11/66	14/61	20/61	8/7/61	23/6/61	7/12/61	8/12/61	5/1/61	15/6/61

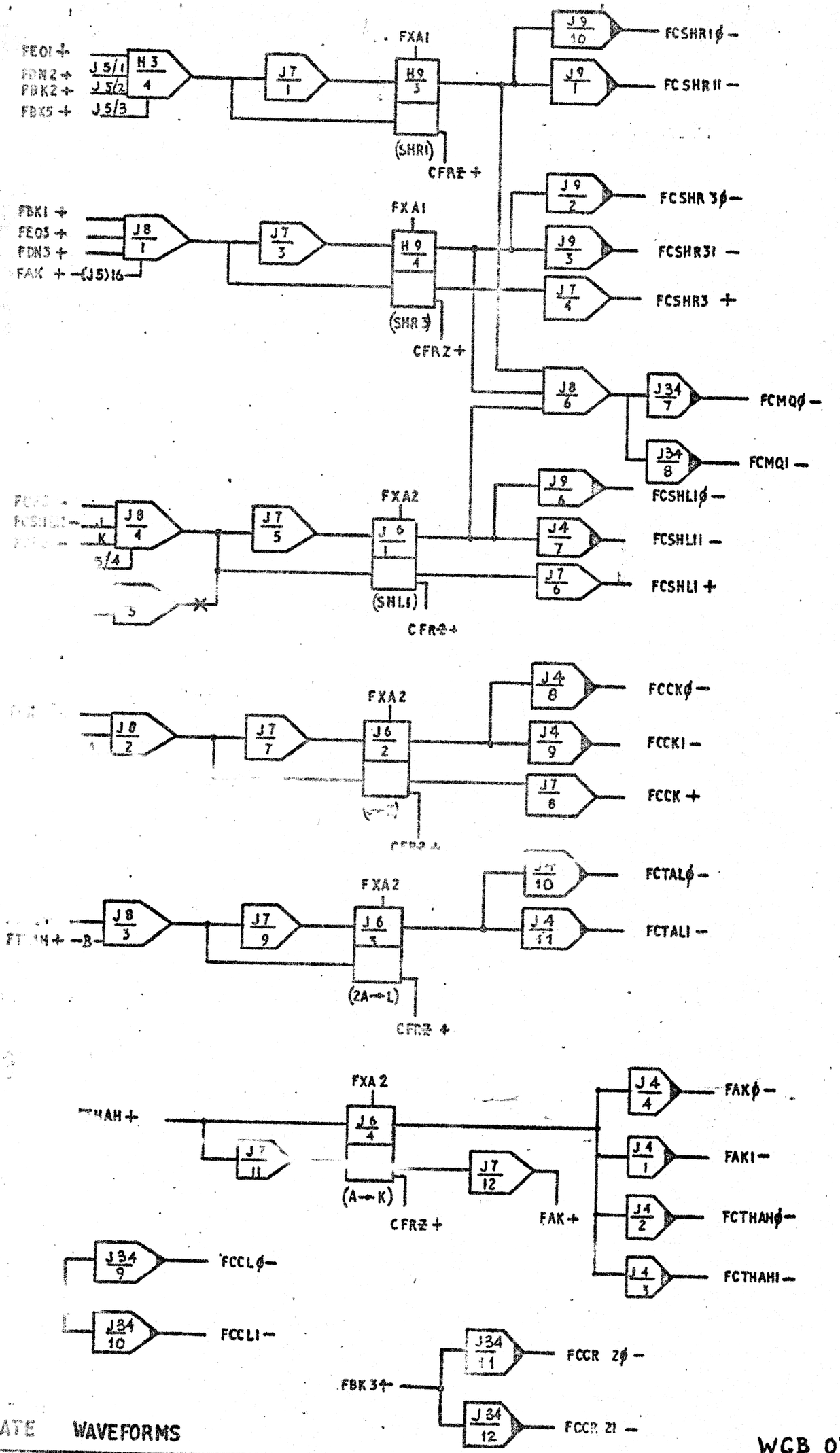

GATE WAVEFORMS

WGB 07/57.

SUB	ISS	1	2
ACD	ACD 5061	ACD 5318	5767
	11/66	24/2/66	20/5/66

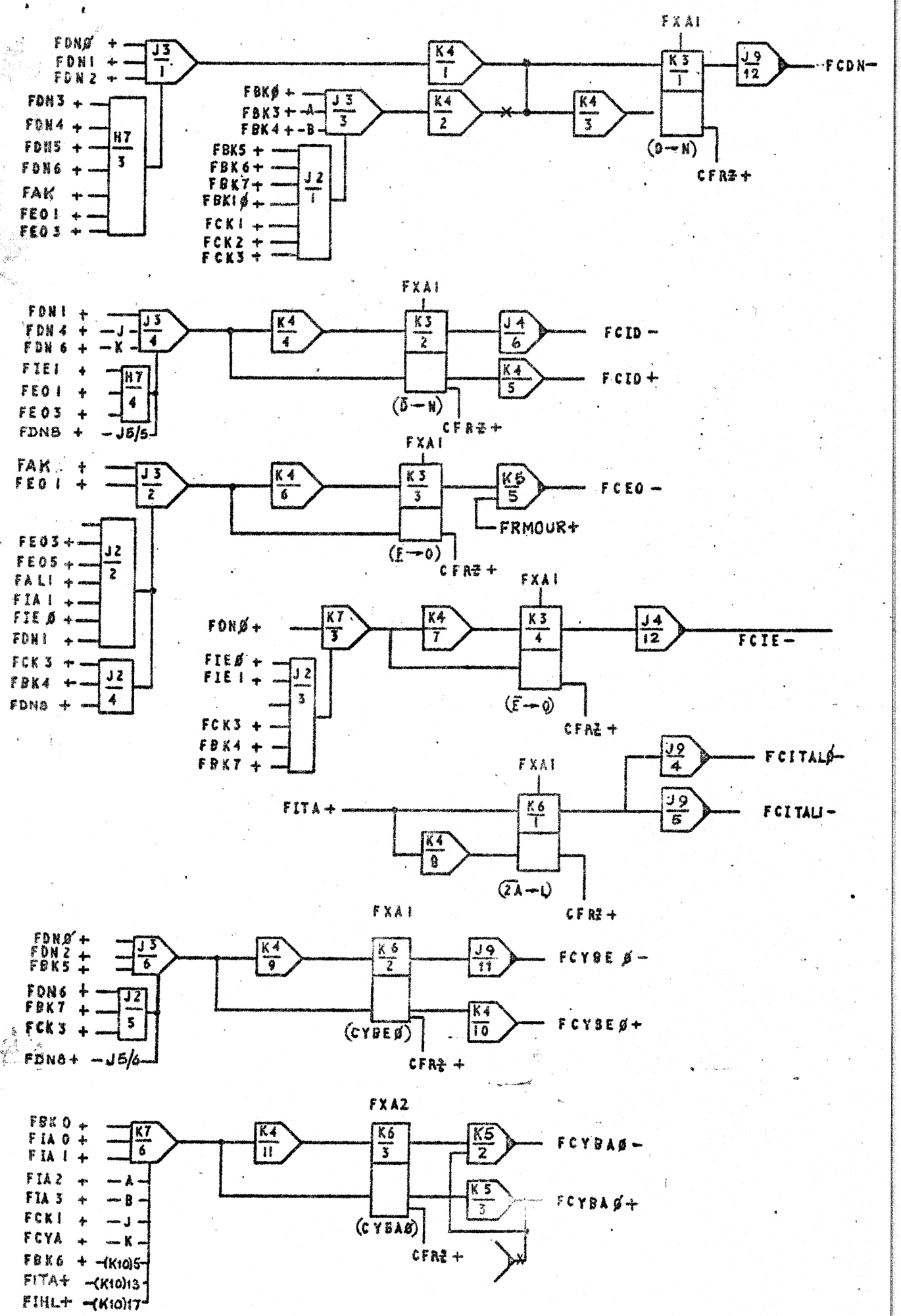

WGB 07/572

GATE WAVEFORMS

SUB	ISS	1	2	3										
ACD	ACD 5061	ACD 5318	5767	5985										
DATE	4/1/66	24/2/66	20/5/66	8/7/66										

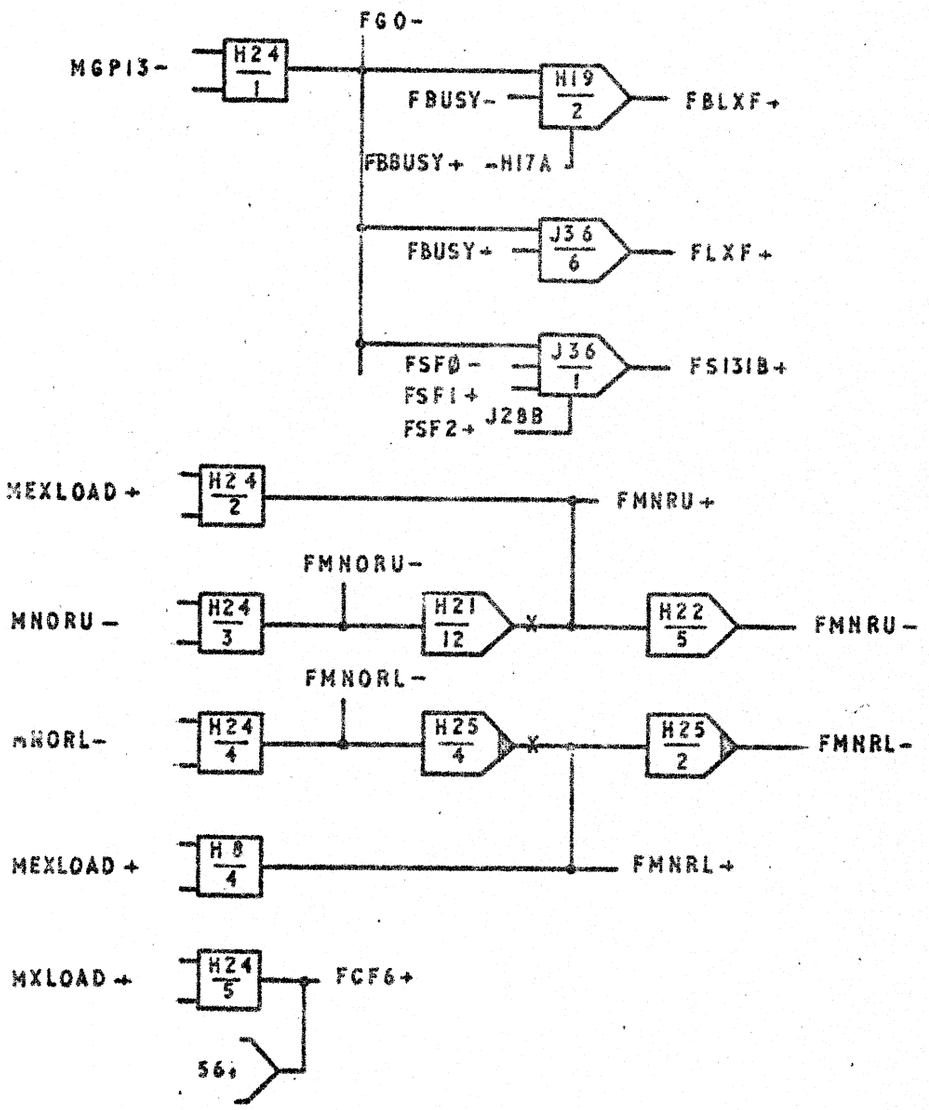

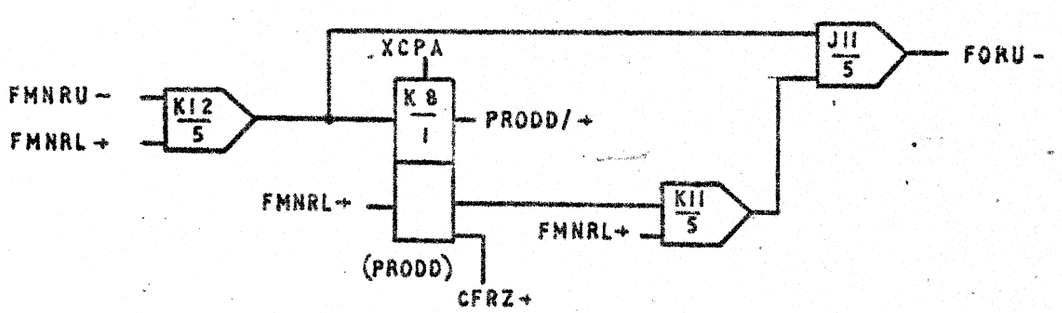

WGB07/580

READ TO FLOATING PO

SUB	166	1	2	3	4	5	6	7	8	9	10	11
ACD	5061	5098	5145	5318	5767	5985	6334	ACW 0600	ACW 0641	ACW 0673	ACW 0686	0726
DATE	4-1	14-1	24-1	24-2	20-5	3-7	25-8	7-12	25-1	8-3	5-4	5/6/60

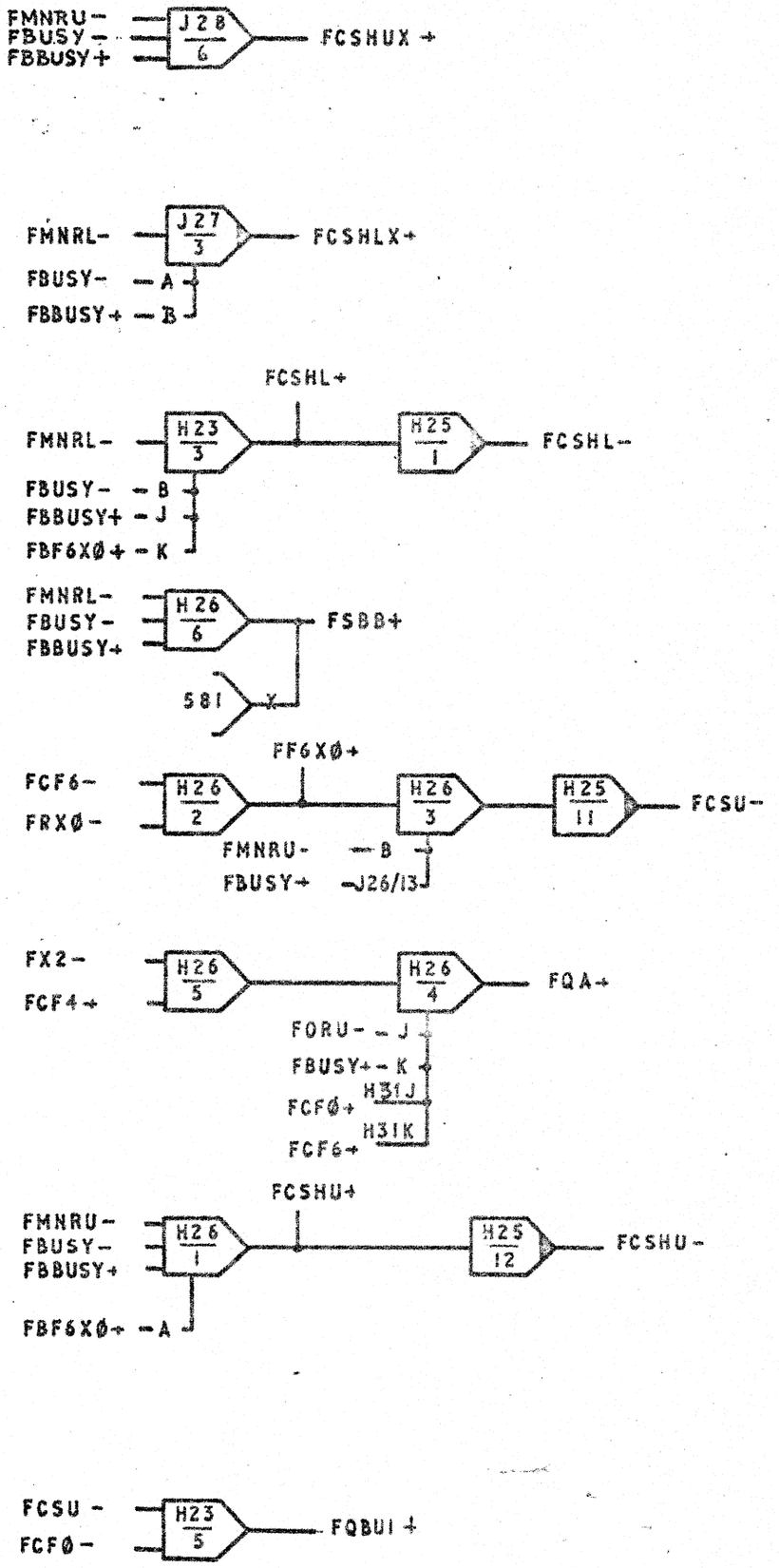

WGB07/59o

READ TO FLOATING POIN

SUB	165	1	2	3	4	5	6	7	8	9					
ACD	5061	5318	5767	5985	6344	ACW 0600	ACW 0641	ACW 0675	ACW 0686	ACW 6726					
DATE	4-1-66	24-2-66	20-5-66	8-7-66	25-9-66	7-12-66	25-1-67	8-3-67	3-4-67	5/5/67					

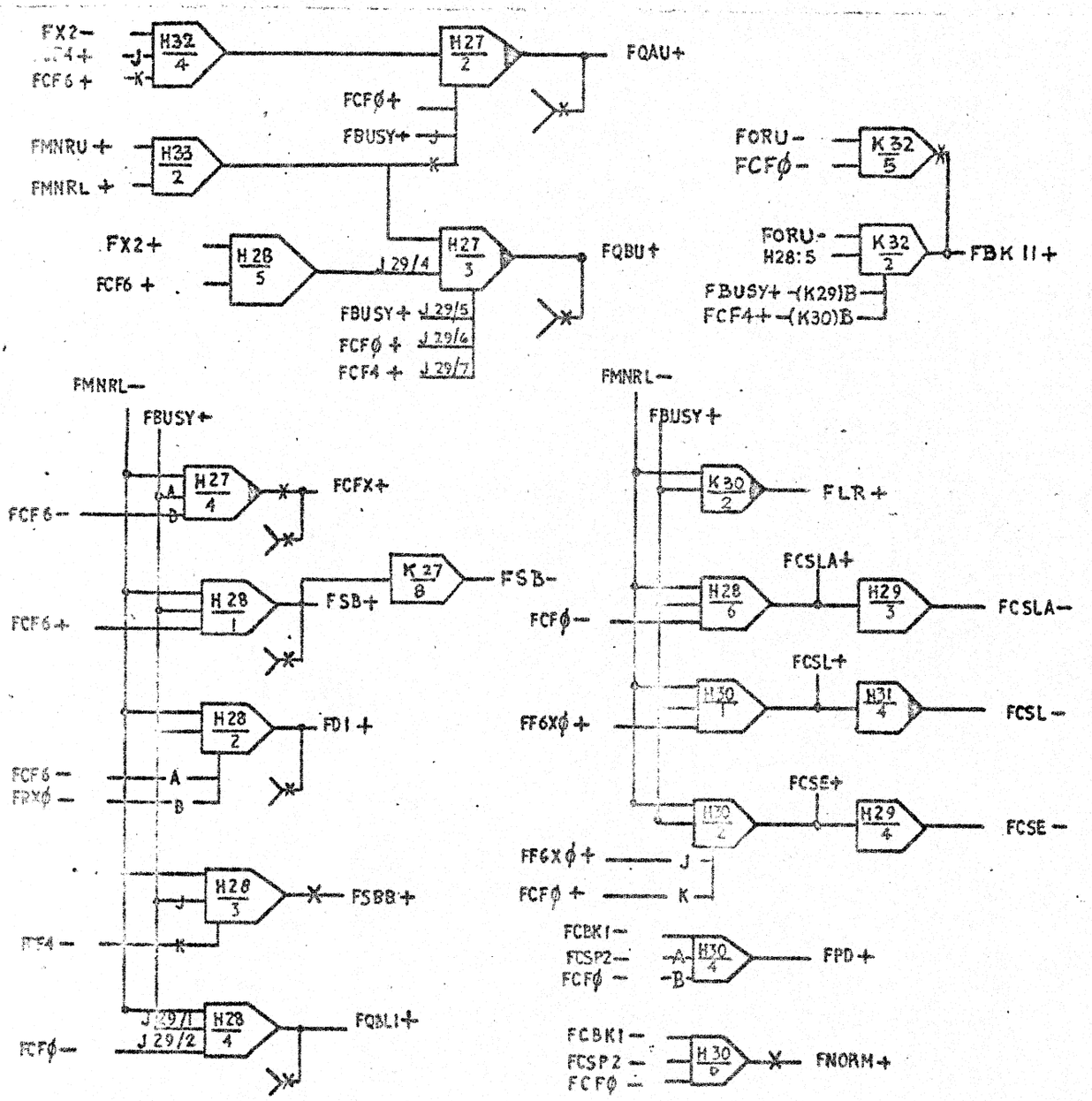

READ TO FLOATING POINT

WGB 07/58

SUB	ISS	1	2	3	4	5	6

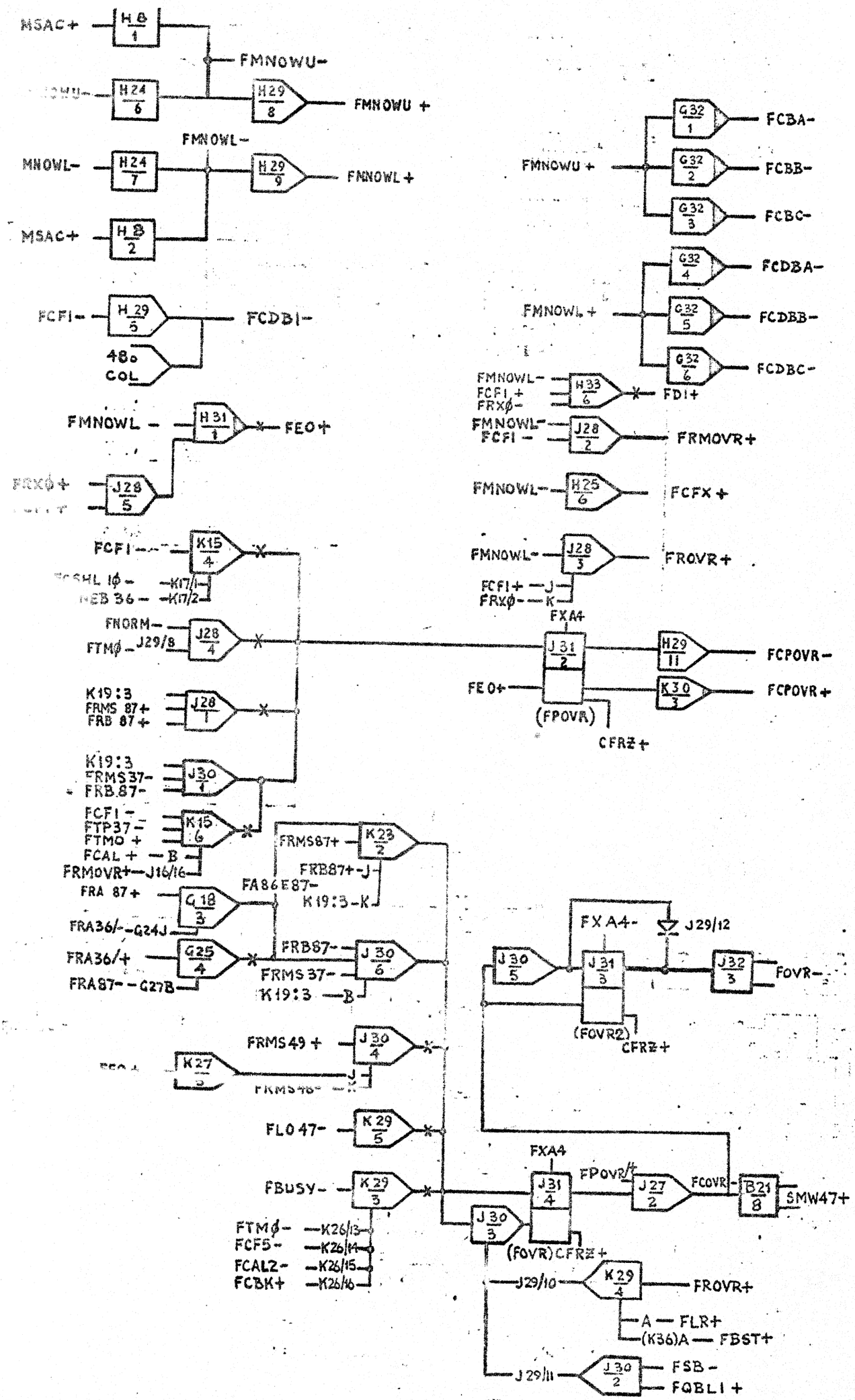

WRITE FROM FLOATING POINT

WGB 07/591

SUB	ISS	1	2	3
ECD	ACW 0686	ACW 0726	ACW 0765	ACW 0864