VOLUME A42 MACHINE 3705- -0080232 MODEL M81 SYSTEM 0002904 MODE BOX SHIP 81/12/11

LOGIC TYPE -0- SYSTEMS DIAGRAMS

PAGE NUM	SH	TITLE	PART NUM	EC NUM	FEATURE B/M OR B/MS
AA000		BINDER TAB VOL A42	0008496496	344270	.W. 0001862344
CW000		CENTRAL CONTROL	0001986968	344828	.W. 0001862344
CW001		CENTRAL CONTROL	0001769235	344828	.W. 0001862344
CW002		CENTRAL CONTROL	0001769236	344270	.W. 0001862344
CW011		CENTRAL CONTROL	0001769237	344828	.W. 0001862344
CW012		CENTRAL CONTROL	0001769238	344828	.W. 0001862344
CW013		CENTRAL CONTROL	0004499507	344828	.W. 0001862344
CW014		CENTRAL CONTROL	0004499508	344828	.W. 0001862344
CW050		CENTRAL CONTROL	0004499513	344828	.W. 0001862344
CW101		CENTRAL CONTROL	0001785320	309538	.W. 0001862344
CW102		CENTRAL CONTROL	0001785321	309538	.W. 0001862344
CW103		CENTRAL CONTROL	0001785322	309538	.W. 0001862344
CW104		CENTRAL CONTROL	0001785323	309538	.W. 0001862344
CW105		CENTRAL CONTROL	0001785324	309538	.W. 0001862344
CW106		CENTRAL CONTROL	0001785325	309538	.W. 0001862344
CW107		CENTRAL CONTROL	0001785326	309538	.W. 0001862344
CW108		CENTRAL CONTROL	0001785327	309538	.W. 0001862344
CW109		CENTRAL CONTROL	0001785328	309538	.W. 0001862344
CW110		CENTRAL CONTROL	0001785329	309538	.W. 0001862344
CW111		CENTRAL CONTROL	0001785330	309538	.W. 0001862344
CW112		CENTRAL CONTROL	0001785331	309538	.W. 0001862344
CW113		CENTRAL CONTROL	0001785332	309538	.W. 0001862344
CW114		CENTRAL CONTROL	0001785333	309538	.W. 0001862344
CW115		CENTRAL CONTROL	0001785334	309538	.W. 0001862344
CW116		CENTRAL CONTROL	0001785335	309538	.W. 0001862344
CW117		CENTRAL CONTROL	0001785336	309538	.W. 0001862344
CW118		CENTRAL CONTROL	0001785337	309538	.W. 0001862344
CW119		CENTRAL CONTROL	0001785338	309538	.W. 0001862344
CW120		CENTRAL CONTROL	0001785339	309538	.W. 0001862344
CW121		CENTRAL CONTROL	0001785340	309538	.W. 0001862344
CW122		CENTRAL CONTROL	0001785341	309538	.W. 0001862344
CW123		CENTRAL CONTROL	0001785342	309538	.W. 0001862344
CW124		CENTRAL CONTROL	0001785343	309538	.W. 0001862344
CW301		CENTRAL CONTROL	0001986969	344270	.W. 0001862344
CW302		CENTRAL CONTROL	0001785365	309538	.W. 0001862344
CW303		CENTRAL CONTROL	0001785366	309538	.W. 0001862344
CW304		CENTRAL CONTROL	0001785367	309538	.W. 0001862344
CW305		CENTRAL CONTROL	0001785368	309538	.W. 0001862344
CW306		CENTRAL CONTROL	0001785369	309538	.W. 0001862344
CW307		CENTRAL CONTROL	0001785370	309538	.W. 0001862344
CW308		CENTRAL CONTROL	0001785371	309538	.W. 0001862344
CW309		CENTRAL CONTROL	0001785372	309538	.W. 0001862344

VOLUME A42 MACHINE 3705- -0080232 MODEL M81 SYSTEM 0002904 MODE BOX SHIP 81/12/11

LOGIC TYPE -0- SYSTEMS DIAGRAMS

PAGE NUM	SH	TITLE	PART NUM	EC NUM	FEATURE B/M OR B/MS	
CW500		CENTRAL CONTROL	0004499510	344828	.W.	0001862344
CW501		CENTRAL CONTROL	0001749501	316673	.W.	0001862344
CW502		CENTRAL CONTROL	0001749502	316673	.W.	0001862344
CW503		CENTRAL CONTROL	0001749503	316673	.W.	0001862344
CW504		CENTRAL CONTROL	0001749504	316673	.W.	0001862344
CW505		CENTRAL CONTROL	0001749505	316673	.W.	0001862344
CW506		CENTRAL CONTROL	0001749506	316673	.W.	0001862344
CW507		CENTRAL CONTROL	0001749507	316673	.W.	0001862344
CW508		CENTRAL CONTROL	0001749508	316673	.W.	0001862344
CW509		CENTRAL CONTROL	0001749509	316673	.W.	0001862344
CW510		CENTRAL CONTROL	0001749510	316673	.W.	0001862344
CW511		CENTRAL CONTROL	0001749511	316673	.W.	0001862344
CW512		CENTRAL CONTROL	0001749512	316673	.W.	0001862344
CW513		CENTRAL CONTROL	0001749513	316673	.W.	0001862344
CW514		CENTRAL CONTROL	0001749514	316673	.W.	0001862344
CW515		CENTRAL CONTROL	0001749515	316673	.W.	0001862344
CW516		CENTRAL CONTROL	0001749516	316673	.W.	0001862344
CW517		CENTRAL CONTROL	0001749517	316673	.W.	0001862344
CW518		CENTRAL CONTROL	0001749518	316673	.W.	0001862344
CW519		CENTRAL CONTROL	0001749519	316673	.W.	0001862344
CW520		CENTRAL CONTROL	0001749520	316673	.W.	0001862344
CW521		CENTRAL CONTROL	0001749521	316673	.W.	0001862344
CW522		CENTRAL CONTROL	0001749522	316673	.W.	0001862344
CW523		CENTRAL CONTROL	0001749523	316673	.W.	0001862344
CW524		CENTRAL CONTROL	0001749524	316673	.W.	0001862344
CW525		CENTRAL CONTROL	0001749525	316673	.W.	0001862344
CW526		CENTRAL CONTROL	0001749526	316673	.W.	0001862344
CW527		CENTRAL CONTROL	0001749527	316673	.W.	0001862344
CW528		CENTRAL CONTROL	0001749528	316673	.W.	0001862344
CW529		CENTRAL CONTROL	0001749529	316673	.W.	0001862344
CW530		CENTRAL CONTROL	0001749530	316673	.W.	0001862344
CW531		CENTRAL CONTROL	0001749531	316673	.W.	0001862344
CW532		CENTRAL CONTROL	0001749532	316673	.W.	0001862344
CX001		CENTRAL CONTROL	0001769239	344270	.W.	0001862344
CX002		CENTRAL CONTROL	0001769240	344270	.W.	0001862344
CX003		CENTRAL CONTROL	0001769241	344828	.W.	0001862344
CX004		CENTRAL CONTROL	0001769242	344828	.W.	0001862344
CX005		CENTRAL CONTROL	0001769243	344270	.W.	0001862344
CX006		CENTRAL CONTROL	0001769244	344270	.W.	0001862344
CX007		CENTRAL CONTROL	0001769245	344828	.W.	0001862344
CX008		CENTRAL CONTROL	0001769246	344270	.W.	0001862344
CX009		CENTRAL CONTROL	0001769247	344828	.W.	0001862344

VOLUME A42 MACHINE 3705- -0080232 MODEL M81 SYSTEM 0002904 MODE BOX SHIP 81/12/11

LOGIC TYPE -0- SYSTEMS DIAGRAMS

PAGE NUM	SH	TITLE	PART NUM	EC NUM	FEATURE B/M OR B/MS
CX010		CENTRAL CONTROL	0001769248	344270	.W. 0001862344
CX011		CENTRAL CONTROL	0001769249	344270	.W. 0001862344
CZ001		CENTRAL CONTROL	0001852856	344270	.W. 0001862344
CZ002		CENTRAL CONTROL	0001852857	344270	.W. 0001862344
CZ003		CENTRAL CONTROL	0001852858	344270	.W. 0001862344
CZ004		CENTRAL CONTROL	0001852859	344270	.W. 0001862344
CZ005		CENTRAL CONTROL	0001852860	344270	.W. 0001862344

TOTAL PART NUMBERS THIS VOLUME 91

PART NO 1986968 | LOGIC PG NO CW000

3705-80
CHANNEL ADAPTER ROS BOOTSTRAP
LOADER REFERENCE
MATERIAL

I TYPE I ROS LOADER	II NROS LOADER
1 CARD P/N 8211470 MUST BE PRESENT IN 01A-B4F2	1 CARD P/N 8252028 MUST BE PRESENT IN 01A-B4F2
2 ROS FLOW CHARTS-CW150	2 ROS FLOW CHARTS-CW500
3 PROGRAM LISTINGS-CW101 THRU CW124	3 PROGRAM LISTINGS-CW501 THRU CW532
4 ROS INSTRUCTION TEST SIMULATION RUN LISTING CW301 THRU CW309	4 ROS INSTRUCTION TEST SIMULATION RUN LISTING CW301 THRU CW309
5 SEE NOTES [1][2][3][4][5]	5 SEE NOTES [1][2][3][4][5][6]

NOTES

[1] WITH A CA-1, TYPE I ROS IS INSTALLED IN 01A-B4F2

[2] WITH A SINGLE CA-4, TYPE I ROS OR NROS IS INSTALLED IN 01A-B4F2

[3] WITH TWO CA-4'S, NROS IS INSTALLED IN 01A-B4F2

[4] WITH A STANDALONE REMOTE (NO CA'S INSTALLED), NO ROS CARD IS INSTALLED IN 01A-B4F2

[5] CA-1 01A-A4 FACTORY FEATURE B/M 1856419
CA-4 01A-A4 FACTORY FEATURE B/M 5153914
CA-4 01A-B1 FACTORY FEATURE B/M 5153915 (2ND CA-4)

[6] THE 3705-80 NROS IS THE SAME NROS USED ON THE 3705-III. THE NROS CAN CONTROL UP TO FOUR CA-4'S BUT ONLY TWO CA-4'S MAY BE INSTALLED IN A 3705-80

"THIS DOCUMENT IS THE PROPERTY OF IBM. ITS USE IS AUTHORIZED ONLY FOR RESPONDING TO A REQUEST FOR QUOTATION OR FOR THE PERFORMANCE OF WORK FOR IBM. ALL QUESTIONS MUST BE REFERRED TO THE IBM PURCHASING DEPARTMENT."

VERTICAL ELECTRICAL FORMAT
MRO# 780522203
820-0133-1
ASTROCLOTH MSSOT

IBM											
NAME	3705-80 ROS REF										
DESIGN	DJR	OCT80	SHT OF								
DETAIL	RTS	OCT80									
CHECK			CLASSIFICATION								
APPRO			DJR	JUN81							

	DATE	CHANGE NO		DATE	CHANGE NO
	OCT80	344270			
RED	JUN81	344828			

MUST CONFORM TO ENG SPEC	DEVELOPMENT NO	LOGIC PG NO
		CW000

1986968 B

- GATE CCU INDATA TO Y BUS — CS004DB2 — 2
- BOOTSTRAP ROS 2 GATED — CU016GJ6 — 12
+ SAR BIT 0.5 — DJ011EC2 — 22
+ SAR BIT 0.6 — DJ011EH2 — 32
+ SAR BIT 0.7 — DJ011EK2 — 42

HE SERV* — A-B4F4 — 2 B04, 12 D13
BK SERV* — A-B4F4 — 42 B10
BJ SERV* — A-B4F4 — 32 B13
GM SERV* — A-B4F5 — 22 B11

-BLANK COLUMN-

-BLANK COLUMN-

GK SERV* — A-B4F4 — B12 — 406
GJ SERV* — A-B4F4 — D11 — 413
GH SERV* — A-B4F4 — D10 — 420
GG SERV* — A-B4F4 — D12 — 427
GE SERV* — A-B4F4 — D04 — 434
GD SERV* — A-B4F4 — D03 — 441
GC SERV* — A-B4F4 — D02 — 448
GB SERV* — A-B4F4 — D05 — 455
BM SERV* + — A-B4F4 — B11 — 458

458 FOLLOWS CU010BE4 — CU010-BM2
455 FOLLOWS CU012DC4 — CU012-GB6
448 FOLLOWS CU012DD4 — CU012-GC6
441 FOLLOWS CU012DE4 — CU012-GD6
434 FOLLOWS CU012DG4 — CU012-GE6
427 FOLLOWS CU012DJ4 — CU012-GG6
420 FOLLOWS CU012DK4 — CU012-GH6
413 FOLLOWS CU012DL4 — CU013-GJ6
406 FOLLOWS CU012DN4 — CU013-GK6

LOC. TYPE

CW001
000

SERV WIRING

E.C. HISTORY: 344270

DATE LAST EC: 06-02-81 344828

MACH.3705
FRAME 01
IBM CORP.SCD CW001
P.N. 1769235 000

000 CW002

+ SAR BIT 1.0 —— DK971EG2 — 2

+ SAR BIT 1.1 —— DK971EL2 — 12

+ SAR BIT 1.2 —— DL001EC2 — 22

+ SAR BIT 1.3 —— DL001EH2 — 32

+ SAR BIT 1.4 —— DL001EK2 — 42

+ SAR BIT 1.5 —— DM001EC2 — 52

+ SAR BIT 1.6 —— DM001EH2 — 62

+ SAR BIT 1.7 —— DM001EK2 — 72

2 B03 — AK SERV* — A-B4F4

12 D02 — AJ SERV* — A-B4F4

22 B07 — AH SERV* — A-B4F4

32 D06 — AG SERV* — A-B4F4

42 D07 — AF SERV* — A-B4F4

52 B05 — AE SERV* — A-B4F4

62 D09 — AD SERV* — A-B4F4

72 B09 — AC SERV* — A-B4F4

LOC. TYPE

CW002
000

SERV WIRING
E.C. HISTORY
MACH. 3705
FRAME 01
IBM CORP. SCD
P.N. 1769236
CW002
000

DATE LAST EC
10-14-80 344270

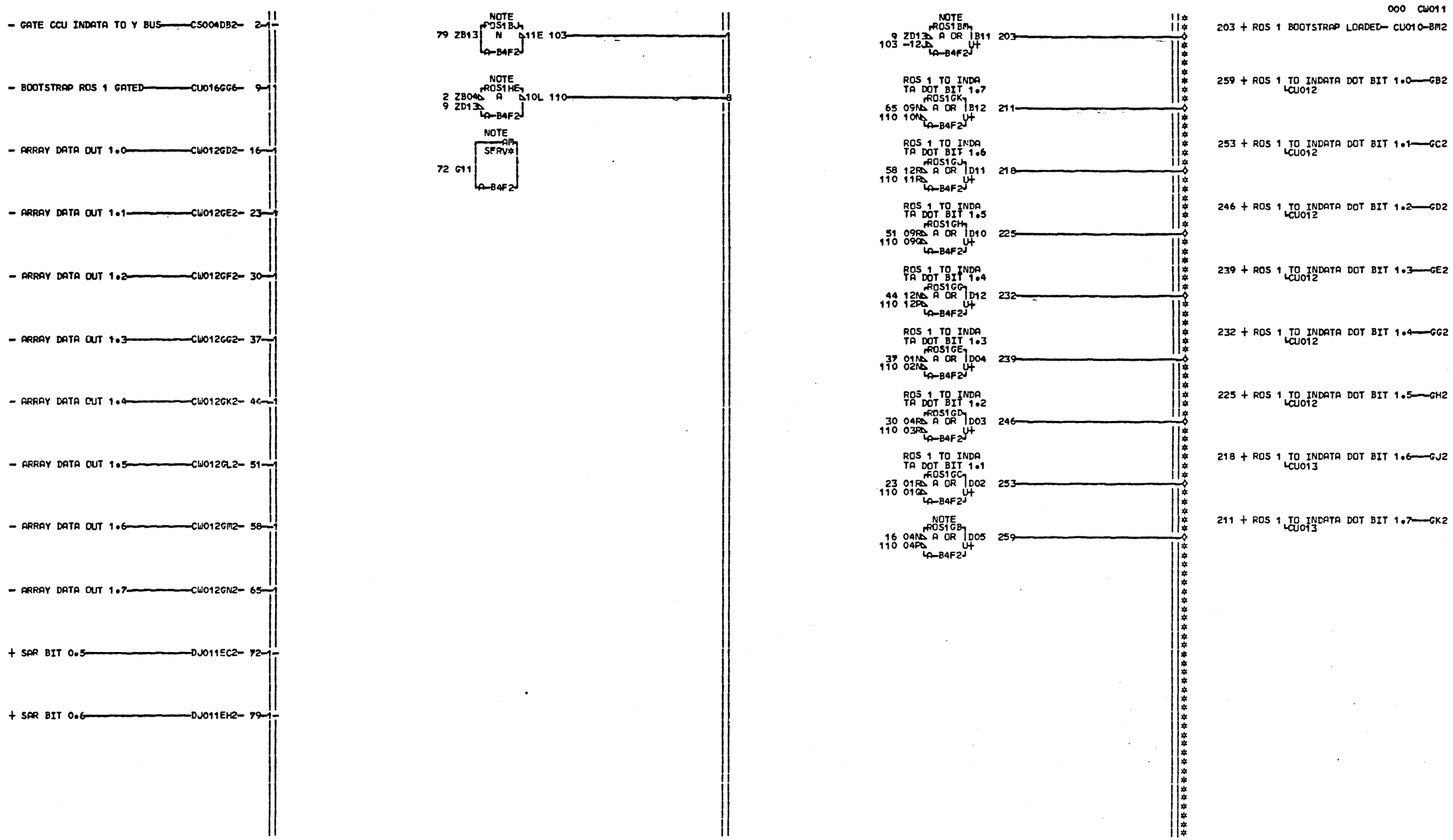

NOTE. USE LOGIC SHEETS CW011
AND CW012 IF ROS 1 IS INSTALLD
IN 01A-B4F2-CARD PN 8211470.
USE LOGIC SHEETS CW013 AND
CW014 IF N ROS IS INSTALLED IN
01A-B4F2-CARD PN 8252028.
USE LOGIC SHEETS CW001 AND
CW011 CW002 IF IPL IS VIA THE REMOTE
PROG LOADER FEATURE.
000

LOC. TYPE
A-B4F2 7593

TYPE 1 ROS
E.C.-HISTORY-E MACH.3705
344270
FRAME 01
IBM CORP.SCD CW011
DATE LAST EC
06-02-81 344828 P.N. 1769237 000

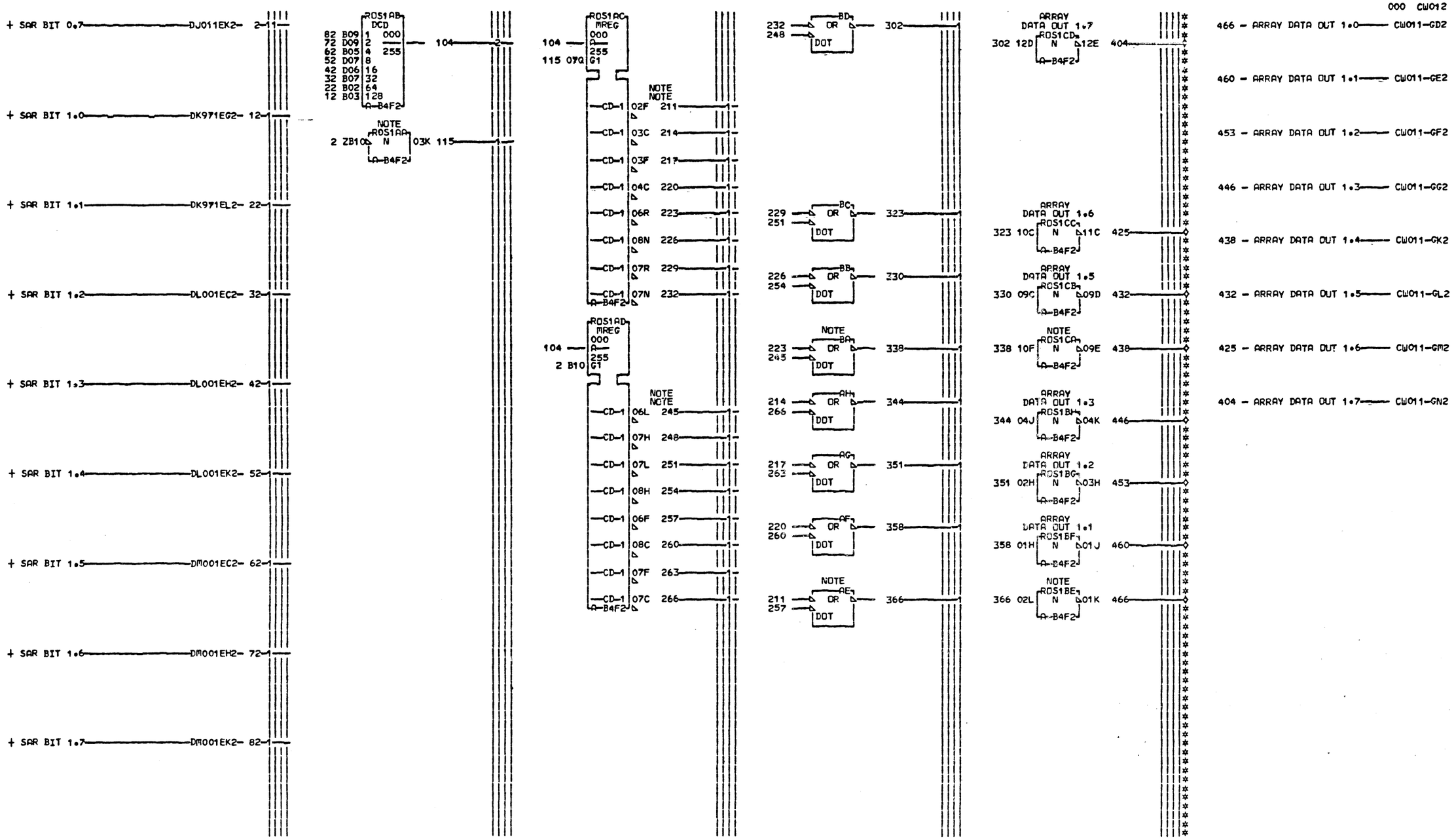

NOTE. SEE NOTE ON CW011

LOC. TYPE
A-B4F2 7593

TYPE 1 ROS

E.C. HISTORY E
344270

MACH.3705
FRAME 01
IBM CORP.SCD CW012
P.No. 1769238 000

DATE LAST EC
06-02-81 344828

- GATE CCU INDATA TO Y BUS — CS004DB2 — 2-1
- BOOTSTRAP ROS 1 GATED — CW016GG6 — 6-1
ALWAYS MINUS 4V — CW013001 — 10-1
ALWAYS MINUS 4V — CW013002 — 14-1
ALWAYS MINUS 4V — CW013003 — 18-1
ALWAYS MINUS 4V — CW013004 — 22-1
ALWAYS MINUS 4V — CW013005 — 26-1
ALWAYS MINUS 4V — CW013006 — 30-1
ALWAYS MINUS 4V — CW013007 — 34-1
ALWAYS MINUS 4V — CW013008 — 38-1
+ ARRAY DATA OUT 1.0 — CW014FD4 — 42-1
+ ARRAY DATA OUT 1.1 — CW014FE4 — 46-1
+ ARRAY DATA OUT 1.2 — CW014FF4 — 50-1
+ ARRAY DATA OUT 1.3 — CW014FG4 — 54-1
+ ARRAY DATA OUT 1.4 — CW014FK4 — 58-1
+ ARRAY DATA OUT 1.5 — CW014FL4 — 62-1
+ ARRAY DATA OUT 1.6 — CW014FM4 — 66-1
+ ARRAY DATA OUT 1.7 — CW014FN4 — 70-1
+ SAR BIT 0.5 — DJ011EC2 — 74-1
+ SAR BIT 0.6 — DJ011EH2 — 78-1
+ SAR BIT 0.7 — DJ011EK2 — 82-1

NOTE. USE LOGIC SHEETS CW013 AND CW014 IF N ROS IS INSTALLD IN 01A-B4F2-CARD PN 8252028.
USE LOGIC SHEETS CW011 AND CW012 IF ROS 1 IS INSTALLED IN 01A-B4F2-CARD PN 8211470.
USE LOGIC SHEETS CW001 AND CW002 IF IPL IS VIA THE REMOTE PROG LOADER FEATURE.
CW013 000

NOTE AP: N NROS XLLDD CE4809 A-B4F2 — 74 G11 — 103
NOTE BJ: AR NROS XLLDD CE480A A-B4F2 — 78 B13 — 111, 115
NOTE BK: AR NROS XLLDD CE480B A-B4F2 — 82 B10 — 118, 122
NOTE HE: A NROS XLLDD CE482A A-B4F2 — 2 B04, 6 D13 — 130
GE: OR OR NROS XLHCC CE4804 A-B4F2 D04 — 54, 38 G08 — 155
GJ: OR OR NROS XLHCC CE4807 A-B4F2 D11 — 66, 34 G10 — 162
GH: OR OR NROS XLHCC CE4806 A-B4F2 D10 — 62, 30 J09 — 169
GK: OR OR NROS XLHCC CE4808 A-B4F2 B12 — 70, 26 J10 — 176
GD: OR OR NROS XLHCC CE4803 A-B4F2 D03 — 50, 22 J07 — 183
GC: OR OR NROS XLHCC CE4802 A-B4F2 D02 — 46, 18 G07 — 190

NOTE BH: A NROS XLHCC CE480G A-B4F2 — 6 D13, 103 — 203
CJ: A NROS XLLCC CE480F A-B4F2 — 111, 118, 130 — 210
CH: A NROS XLLCC CE480E A-B4F2 — 111, 122, 130 — 230
CG: A NROS XLLCC CE480D A-B4F2 — 115, 118, 130 — 237
NOTE CF: A NROS XLLCC CE480C A-B4F2 — 115, 122, 130 — 245
GG: OR OR NROS XLHCC CE4805 A-B4F2 D12 — 58, 14 G09 — 256
NOTE GB: OR OR NROS XLHCC CE4801 A-B4F2 D05 — 42, 10 J06 — 264
EB: R NROS XCABB CE481L A-B4F2 — 26 J10
NOTE EA: R NROS XCABB CE481K A-B4F2 — 34 G10
DB: R NROS XCABB CE481J A-B4F2 — 30 J09

HD: R NROS XCAAA CE480L A-B4F2 — 210
HC: R NROS XCAAA CE480K A-B4F2 — 230
HB: R NROS XCAAA CE480J A-B4F2 — 237
HA: R NROS XCAAA CE480H A-B4F2 — 245
NOTE DA: R NROS XCABB CE481H A-B4F2 — 14 G09
CB: R NROS XCABB CE481G A-B4F2 — 38 G08
NOTE CA: R NROS XCABB CE481F A-B4F2 — 22 J07
BB: R NROS XCABB CE481E A-B4F2 — 18 G07
NOTE BA: R NROS XCABB CE481D A-B4F2 — 10 J06

LOC. TYPE

203 + N ROS BOOTSTRAP LOADED — CU010-BH2
245 + SELECT 1ST 256 BYTES — CW014-CF2
237 + SELECT 2ND 256 BYTES — CW014-CG2
230 + SELECT 3RD 256 BYTES — CW014-CH2
210 + SELECT 4TH 256 BYTES — CW014-CJ2
264 + N ROS TO INDATA DOT BIT 1.0 — GB6 (CU012)
190 + N ROS TO INDATA DOT BIT 1.1 — GC6 (CU012)
183 + N ROS TO INDATA DOT BIT 1.2 — GD6 (CU012)
155 + N ROS TO INDATA DOT BIT 1.3 — GE6 (CU012)
256 + N ROS TO INDATA DOT BIT 1.4 — GG6 (CU012)
169 + N ROS TO INDATA DOT BIT 1.5 — GH6 (CU012)
162 + N ROS TO INDATA DOT BIT 1.6 — GJ6 (CU013)
176 + N ROS TO INDATA DOT BIT 1.7 — GK6 (CU013)

N CHANNEL ROS
E.C. HISTORY | E MACH.3705
FRAME 01
IBM CORP.SCD | CW013
DATE LAST EC 06-02-81 344828 | P.N. 4499507 | 000

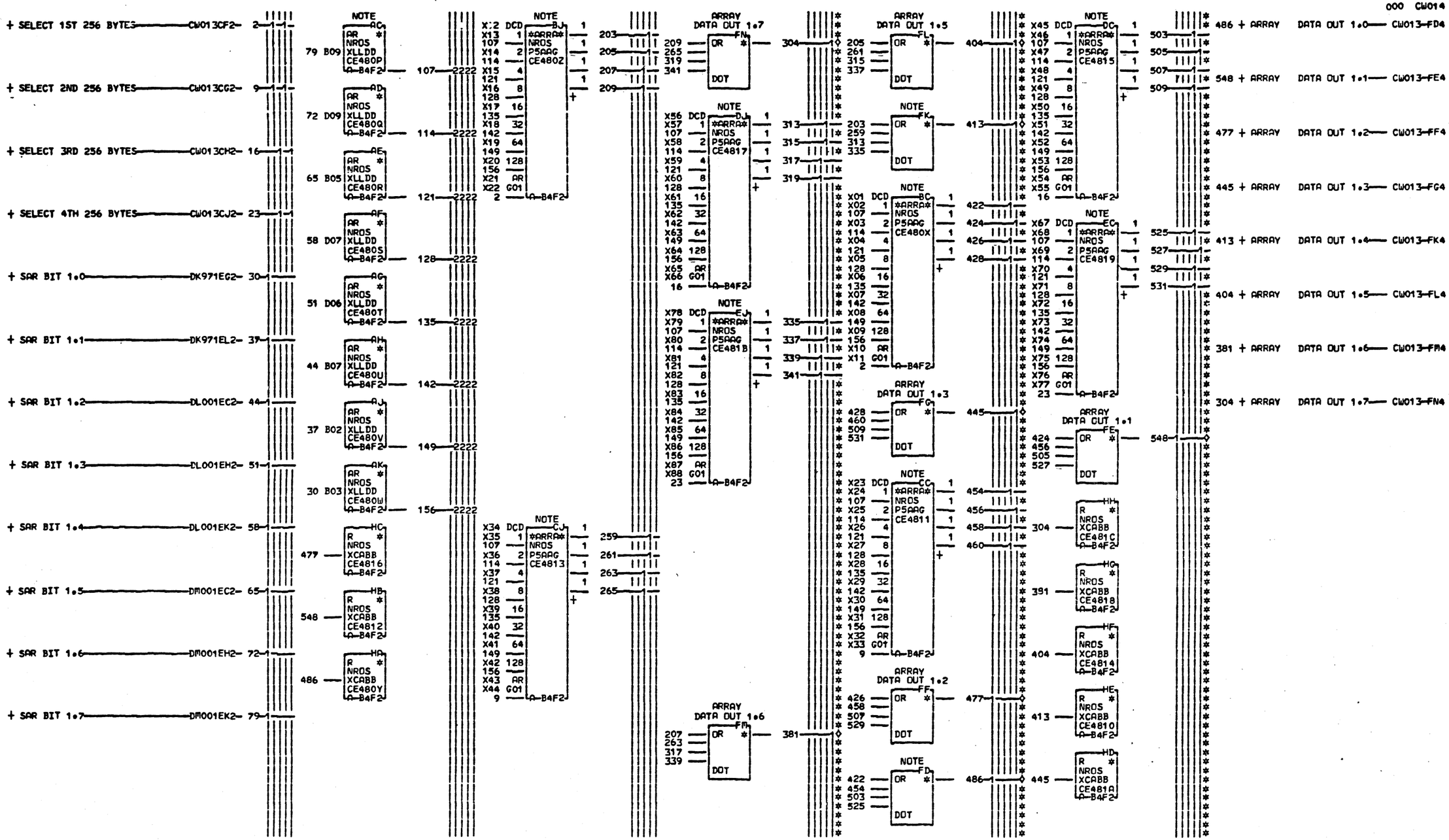

NOTE. SEE NOTE ON CW013

LOC. TYPE

N CHANNEL ROS

E.C. HISTORY — E. MACH.3705

FRAME 01

IBM CORP.SCD CW014

DATE LAST EC 06-02-81 344828

P.N. 4499508 000

THIS DOCUMENT IS THE PROPERTY OF IBM. ITS USE AND DISCLOSURE IS AUTHORIZED ONLY FOR RESPONDING TO A REQUEST FOR QUOTATION OR FOR THE PERFORMANCE OF WORK FOR IBM. ALL QUESTIONS MUST BE REFERRED TO THE IBM PURCHASING DEPARTMENT

IBM

	NAME	DATE
DESIGN	DJR	JUN 81
DETAIL		
CHECK		
APPRO	DJR	JUN 81

FLOW CHART - PAGE 1

TYPE 1 ROS

REL

CHANGE NO 344828

DEVELOPMENT NO

LOGIC PG NO CW050

CLASSIFICATION

MUST CONFORM TO ENG SPEC

4499513 C

TYPE 1 ROS FLOW CHART-PAGE 1

SEE CW101 FOR CORRESPONDING PROGRAM LISTING.

START

INSTRUCTION TESTING SUCCESSFUL — NO → HARDSTOP TAR = 002, 032, 034, 0BE

YES

ROS ESCAPE — YES → TO ROS ESCAPE 06FC

NO → FROM ROS ESCAPE

IPL LATCH ON (LROS 01) — NO → HARDSTOP TAR = 00E8

YES/NO → SAVE MACH. CK. ERROR REG.; SAVE INT. REQUEST GP. 1

YES

MIROS 01
CLEAR REG. 3
RESET TEST MODE
ENABLE CH. INTERFACE

INTERFACE ENABLED — NO

YES

MIROS 02
SET IPL REQUIRED SENSE

SINGLE SUBCHANNEL ACTIVE — NO

YES

INIT. SEL. LEVEL 3 INT. (MIROS 09) — NO

YES

SINGLE SUBCHANNEL ADDRESS (MIROS 11) — NO → MIROS 10 SET CE, DE, UC → A

YES

SET DE, UC STATUS

MIROS 03
SET PROG. LEV. 3 INT. AND RESET C.A. LEV. 1 INT.
SET FINAL XFER SEQUENCE
SET UP TO RESET INIT. SEL. DATA/ ST. SERVICE AND PROGRAM INT.

CA LEVEL 1 INT. (MIROS 04) — YES → N PG. 3

NO

CA DATA/STATUS SERV. LEV. 3 INT. — YES → H PG. 2

NO

INIT. SEL LEV. 3 INT. — NO

YES → B

B

MIROS 12
SET RESET OF INIT. SEL AND DATA/STATUS SERV.

SYSTEM RESET — YES

NO

INTERFACE DISCONNECT — YES

NO

STACKED STATUS CLEARED — YES → 3 PG. 3

NO → Z PG. 2

MIROS 24
SET IPL REQ. RESET SYS. RST.

M PG. 3

MIROS 23
IPL CMD — NO → E PG. 2

YES → R PG. 3

THIS DOCUMENT IS THE PROPERTY OF IBM. ITS USE [redacted] IS AUTHORIZED ONLY FOR RESPONDING TO A REQUEST FOR QUOTATION OR FOR THE PERFORMANCE OF WORK FOR IBM. ALL QUESTIONS MUST BE REFERRED TO THE IBM PURCHASING DEPARTMENT

IBM

	NAME	DATE
DESIGN	DJR	REL
DETAIL		JUN 81
CHECK		
APPRO	DJR	

CLASSIFICATION: JUN81

FLOW CHART – PAGE 2 — TYPE 1 ROS — SHT 2 OF 3

MUST CONFORM TO ENG SPEC

DEVELOPMENT NO: 344828

LOGIC PG NO: CW050

CHANGE NO / DATE / CHANGE NO

4499513 C

4499513 C

TYPE 1 ROS

FLOW CHART PAGE 2

SEE CW101 FOR CORRESPONDING PROGRAM LISTING.

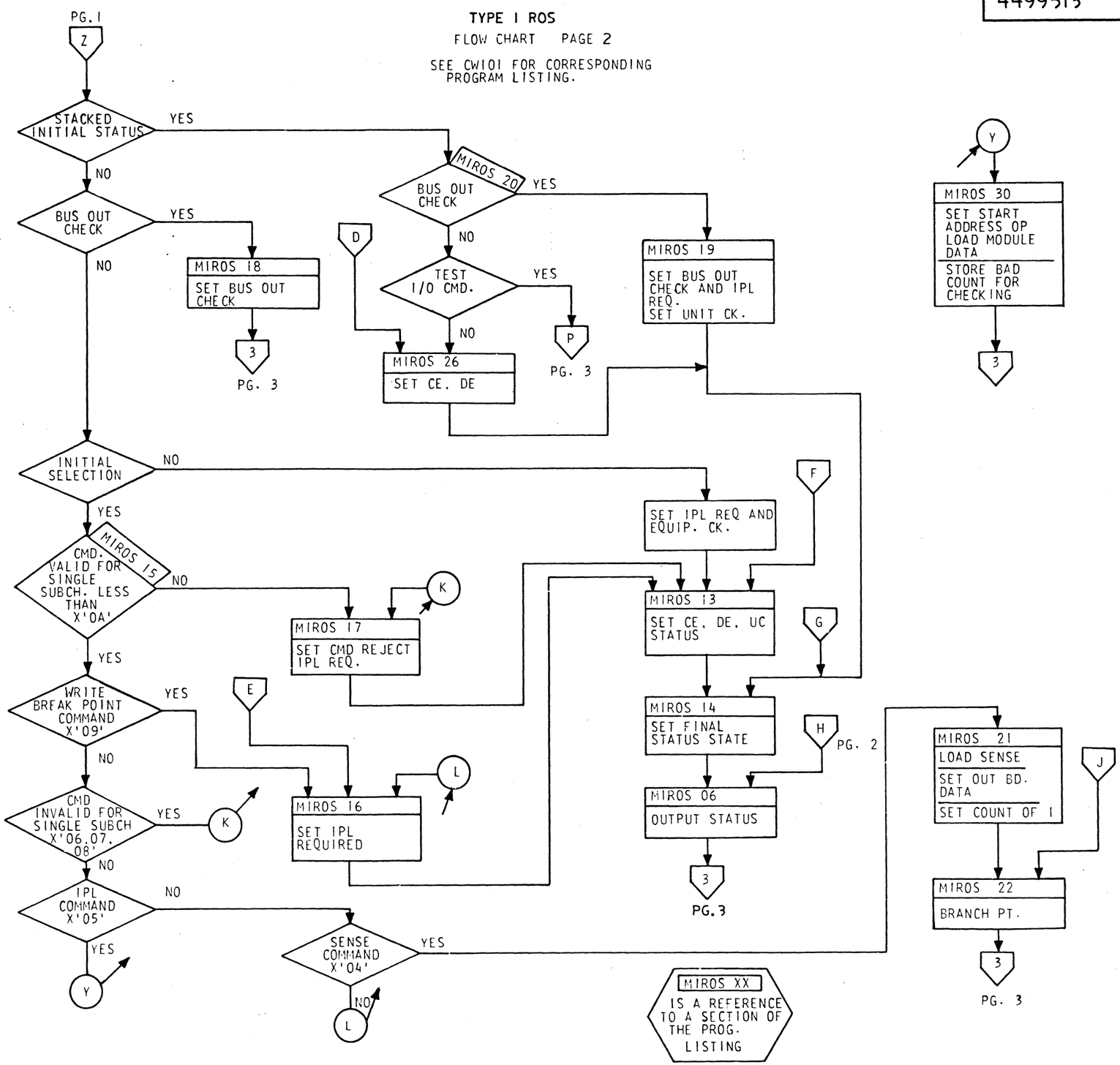

PART NO 4499513

LOGIC PG NO CW050

4499513 C

TYPE I ROS
FLOW CHART PG. 3
SEE CW011 FOR CORRESPONDING
PROGRAM LISTING

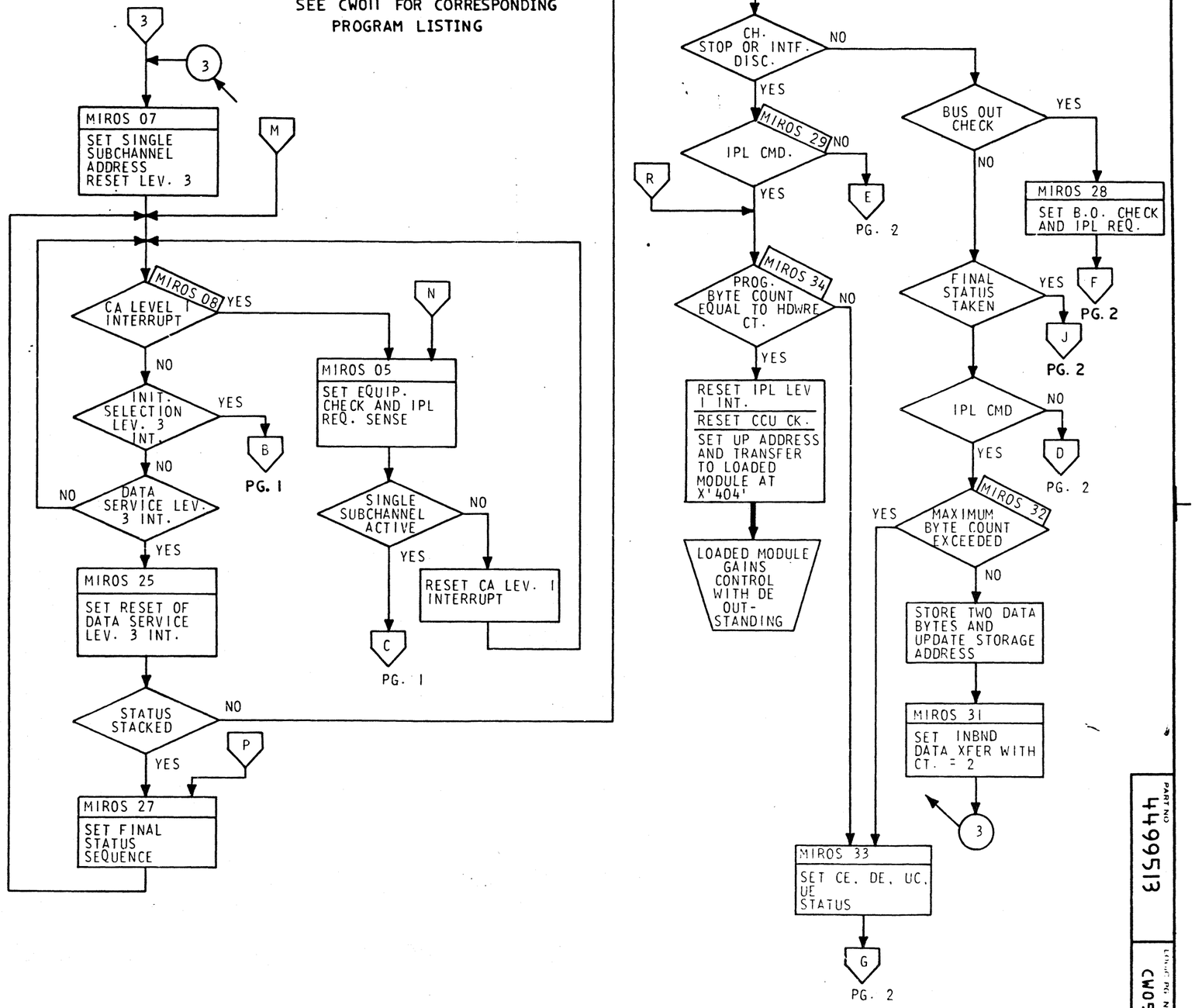

PART NO 4499513

LOGIC PG NO CW050

THIS DOCUMENT IS THE PROPERTY OF IBM. ITS USE [redacted] IS AUTHORIZED ONLY FOR RESPONDING TO A REQUEST FOR QUOTATION OR FOR THE PERFORMANCE OF WORK FOR IBM. ALL QUESTIONS MUST BE REFERRED TO THE IBM PURCHASING DEPARTMENT.

IBM

NAME	TYPE I ROS		
FLOW CHART - PAGE 3			
DESIGN	DJR	JUN 81	SHT 3 OF 3
DETAIL			
CHECK			CLASSIFICATION
APPRO		DJR	JUN 81

REL	JUN 81	DATE	
CHANGE NO	344828		
DATE			
CHANGE NO			

MUST CONFORM TO ENG SPEC

DEVELOPMENT NO

LOGIC PG NO CW050

4499513 C

```
 LOC  OBJ CODE  R1S1M R2S2 ADDR   STMT   SOURCE STATEMENT                                          DOS CL3-6 02/24/72

                                   2 ************************************************************************ AROS0002
                                   3 *                                                                      * AROS0003
                                   4 *        M I N I   C H A N N E L   R O S   C O D E                     * AROS0004
                                   5 *                                                                      * AROS0005
                                   6 *        THIS ROUTINE WILL HANDLE THE IPL FUNCTION FOR THE             * AROS0006
                                   7 *        MINI CHANNEL ADAPTER.                                         * AROS0007
                                   8 *                                                                      * AROS0008
                                   9 ************************************************************************ AROS0009


000000                            12 SROS     START X'00000'                                                  AROS0012
000000                            13 RELOCF   EQU   X'00000'                                                  AROS0013
000000 7004700470047004           14          DC    128X'7004'          OUTPUT STOP FILLERS                   AROS0014
000100 7004700470047004           15          DC    128X'7004'          OUTPUT STOP FILLERS                   AROS0015
000200 7004700470047004           16          DC    128X'7004'          OUTPUT STOP FILLERS                   AROS0016
000300 7004700470047004           17          DC    128X'7004'          OUTPUT STOP FILLERS                   AROS0017
000000                            18          ORG   SROS+RELOCF                                                AROS0018
```

```
LOC  OBJ CODE  R1S1M R2S2 ADDR   STMT   SOURCE STATEMENT                                                  DOS CL3-6 02/24/72

                                  23 *  INSTRUCTION EXECUTION STARTS AT ADDRESS X'0010'                    AROS0023

                                  28 *     THIS IS PART OF BRANCH ON BIT TEST                             AROS0028

000000                            30 SMINST   EQU   *                                                      AROS0030
000000 7004      0    70          31          OUT   0,STOP            BRANCH TO ZERO OCCURED               AROS0031

000002                            33 TEST01   EQU   *                                                      AROS0033
000002 F6FF      7(0)             34          TRM   R7(0),X'FF'       HAVE WE FINISHED BRANCH ON BIT TEST  AROS0034
000004 98B8                000BE  35          BCL   SMIN01            YES, BRANCH OUT OF TEST              AROS0035

000006 80CE      1(0)             37          LRI   R1(0),X'CE'       SET UP BRANCH ON BIT INSTRUCTION     AROS0037
000008 810B      1(1)             38          LRI   R1(1),X'0B'       SET UP BRANCH ON BIT INSTRUCTION     AROS0038
00000A 86FF      7(0)             39          LRI   R7(0),X'FF'       SET ALL BITS ON IN REG 7             AROS0039
00000C 87FF      7(1)             40          LRI   R7(1),X'FF'       SET ALL BITS ON IN REG 7             AROS0040
00000E A8A2                000B2  41          B     TEST06                                                 AROS0041
```

```
LOC  OBJ CODE  R1S1M R2S2 ADDR   STMT   SOURCE STATEMENT                                                DOS CL3-6 02/24/72

                                  45 *  START OF ROS CONTAINED CODE FOR MINI CHANNEL ADAPTER (TYPE 1)        AROS0045

                                  47 *  THE FOLLOWING INSTRUCTIONS CORRECT PARITY AND SAVE THE GROUP         AROS0047
                                  48 *  ZERO REGISTERS                                                       AROS0048

000010                            51 STARTMI  EQU   *                                                        AROS0051
000010 0082      0     0          52          ST    R0,0(R0)          SAVE LEV 1 IAR                       AROS0052
000012 0014      0    01          53          OUT   R0,X'01'          SET GOOD PARITY IN R1                AROS0053
000014 0186      1     0          54          ST    R1,4(R0)          SAVE R1                              AROS0054

000016 0024      0    02          56          OUT   R0,X'02'          SET GOOD PARITY IN R2                AROS0056
000018 028A      2     0          57          ST    R2,8(R0)          SAVE R2                              AROS0057

00001A 0034      0    03          59          OUT   R0,X'03'          SET GOOD PARITY IN R3                AROS0059
00001C 038E      3     0          60          ST    R3,12(R0)         SAVE R3                              AROS0060

00001E 0044      0    04          62          OUT   R0,X'04'          SET GOOD PARITY IN R4                AROS0062
000020 0492      4     0          63          ST    R4,16(R0)         SAVE R4                              AROS0063

000022 0054      0    05          65          OUT   R0,X'05'          SET GOOD PARITY IN R5                AROS0065
000024 0596      5     0          66          ST    R5,20(R0)         SAVE R5                              AROS0066

000026 0064      0    06          68          OUT   R0,X'06'          SET GOOD PARITY IN R6                AROS0068
000028 069A      6     0          69          ST    R6,24(R0)         SAVE R6                              AROS0069

00002A 0074      0    07          71          OUT   R0,X'07'          SET GOOD PARITY IN R7                AROS0071
00002C 079E      7     0          72          ST    R7,28(R0)         SAVE R7                              AROS0072
```

```
 LOC  OBJ CODE  R1S1M R2S2 ADDR   STMT   SOURCE STATEMENT                                                  DOS CL3-6 02/24/72

                                   75 *     THE FOLLOWING INSTRUCTIONS TEST THE BRANCH, BRANCH ON Z, BRANCH * AROS0075
                                   76 *     ON C, LOAD IMMEDIATE, OR IMMEDIATE, ADD IMMEDIATE, AND TEST     * AROS0076
                                   77 *     IMMEDIATE INSTRUCTIONS AND DATA FLOW                            * AROS0077

00002E A804                00034   79          B     TEST02          BRANCH AROUND ERROR OUTPUT            AROS0079
000030 7004      0    70           80 ERROR01  OUT   0,STOP          AN INSTRUCTION OR DATA FLOW HAS       AROS0080
                                   81 *                             FAILED.                               AROS0081
000032 0000                        82          DC    X'0000'                                               AROS0082

000034 8000      1(0)              84 TEST02   LRI   R1(0),X'00'     LOAD ZERO'S INTO REG 1 BYTE 0         AROS0084
000036 9809                00030   85          BCL   ERROR01         LRI, BCL OR DATA FLOW FAILURE         AROS0085
000038 8100      1(1)              86          LRI   R1(1),X'00'     LOAD ZERO'S INTO REG 1 BYTE 1         AROS0086
00003A 980D                00030   87          BCL   ERROR01         LRI, BCL OR DATA FLOW FAILURE         AROS0087

00003C D100      1(1)              89          ORI   R1(1),X'00'     OR ZERO'S INTO REG 1 BYTE 1           AROS0089
00003E 9100      1(1)              90          ARI   R1(1),X'00'     ADD ZERO'S WITH REG 1 BYTE 1          AROS0090
000040 F1FF      1(1)              91          TRM   R1(1),X'FF'     ARE ANY BITS ON?                      AROS0091
000042 9815                00030   92          BCL   ERROR01         ORI, ARI, TRM OR DATA FLOW FAILURE    AROS0092

000044 D1FF      1(1)              94          ORI   R1(1),X'FF'     OR ALL BITS ON INTO REG 1 BYTE 1      AROS0094
000046 91FF      1(1)              95          ARI   R1(1),X'FF'     ADD ALL BITS ON WITH REG 1 BYTE 1     AROS0095
000048 F101      1(1)              96          TRM   R1(1),X'01'     ALL BITS BUT THE LOW ORDER BIT        AROS0096
                                   97 *                             SHOULD BE ON                          AROS0097
00004A 981D                00030   98          BCL   ERROR01         ORI, ARI, TRM OR DATA FLOW FAILURE    AROS0098

00004C F001      1(0)             100          TRM   R1(0),X'01'     DID ADD PROPAGATE?                    AROS0100
00004E 8821                00030  101          BZL   ERROR01         ORI, ARI, TRM OR DATA FLOW FAILURE    AROS0101

000050 D0FF      1(0)             103          ORI   R1(0),X'FF'     OR ALL BITS ON INTO REG 1 BYTE 0      AROS0103
000052 90FF      1(0)             104          ARI   R1(0),X'FF'     ADD ALL BITS ON WITH REG 1 BYTE 0     AROS0104
000054 9802                00058  105          BCL   TEST04          BRANCH DUE TO ADD CAUSING A PROPAGA-  AROS0105
                                  106 *                             TION.                                 AROS0106

000056                            108 TEST03   EQU   *                                                      AROS0108
000056 FFFF                       109          DC    X'FFFF'         BRANCH BACK PAST ZERO. THIS IS A      AROS0109
                                  110 *                             CONSTANT FOR TESTING.                 AROS0110

000058                            112 TEST04   EQU   *                                                      AROS0112
000058 8000      1(0)             113          LRI   R1(0),X'00'     LOAD ZERO'S INTO REG 1 BYTE 0         AROS0113
00005A D000      1(0)             114          ORI   R1(0),X'00'     OR ZERO'S INTO REG 1 BYTE 0           AROS0114
00005C 9000      1(0)             115          ARI   R1(0),X'00'     ADD ZERO'S WITH REG 1 BYTE 0          AROS0115
00005E F0FF      1(0)             116          TRM   R1(0),X'FF'     ARE ANY BITS ON?                      AROS0116
000060 9833                00030  117          BCL   ERROR01         ORI, ARI, TRM OR DATA FLOW FAILURE    AROS0117
```

```
LOC  OBJ CODE  R1S1M R2S2 ADDR   STMT   SOURCE STATEMENT                                          DOS CL3-6 02/24/72

                                  120 *     THE FOLLOWING INSTRUCTIONS TEST GROUP 1 REGISTERS USED BY ROS   * AROS0120
                                  121 *     AND EXCLUSIVE OR, INPUT AND OUTPUT INSTRUCTIONS.                * AROS0121

000062 77C8      7     7          123          XR    R7,R7            CLEAR REG 7                          AROS0123

000000                            125          USING SMINST,R7                                               AROS0125

000064 7157      1     7   00056  127          LH    R1,TEST03        LOAD ALL BITS ON INTO REG 1          AROS0127

                                  129          DROP  R7                                                      AROS0129

000066 051C      5    01          131          IN    R5,X'01'         LOAD REG 1 INTO REG 5                AROS0131
000068 0134      1    03          132          OUT   R1,X'03'         LOAD REG 1 INTO REG 3                AROS0132
00006A 53C8      3     5          133          XR    R3,R5            ARE REG 3 AND REG 5 EQUAL            AROS0133
00006C 983F                00030  134          BCL   ERROR01          BRANCH TO HARDSTOP IF NOT            AROS0134

00006E 73C8      3     7          136          XR    R3,R7            ARE REG 3 AND REG 7 EQUAL            AROS0136
000070 9843                00030  137          BCL   ERROR01          BRANCH TO HARDSTOP IF NOT            AROS0137

000072 17C8      7     1          139          XR    R7,R1            LOAD ALL BITS ON TO REG 7            AROS0139

000074 0354      3    05          141          OUT   R3,X'05'         OUTPUT ZERO'S TO REG 5               AROS0141

000076 013C      1    03          143          IN    R1,X'03'         LOAD ALL BITS OFF TO REG 1           AROS0143

000078 15C8      5     1          145          XR    R5,R1            ARE REG 1 AND REG 5 EQUAL            AROS0145
00007A 984D                00030  146          BCL   ERROR01          BRANCH TO HARDSTOP IF NOT            AROS0146
```

```
LOC  OBJ CODE  R1S1M R2S2 ADDR   STMT   SOURCE STATEMENT                                                DOS CL3-6 02/24/72

                                  149 *     THE FOLLOWING INSTRUCTIONS TEST THE STORE HALFWORD, LOAD HALF-  * AROS0149
                                  150 *     WORD, EXCLUSIVE-OR, AND STORE INSTRUCTIONS                      * AROS0150

00007C 8007      1(0)             152         LRI   R1(0),X'07'       SET UP ADDRESS FOR TESTING            AROS0152
00007E 1785      7     1          153         STH   R7,4(R1)          STORE HALFWORD WITH ALL BITS ON       AROS0153
000080 1305      3     1          154         LH    R3,4(R1)          LOAD HALFWORD PREVIOUSLY STORED       AROS0154
000082 73C8      3     7          155         XR    R3,R7             ARE THEY EQUAL?                       AROS0155
000084 9857                00030  156         BCL   ERROR01           BRANCH TO INDICATE STH, LH, OR XR     AROS0156
                                  157 *                               FAILURE                               AROS0157

000086 1585      5     1          159         STH   R5,4(R1)          STORE HALFWORD WITH ALL BITS OFF      AROS0159
000088 1305      3     1          160         LH    R3,4(R1)          LOAD HALFWORD PREVIOUSLY STORED       AROS0160
00008A 53C8      3     5          161         XR    R3,R5             ARE THEY EQUAL?                       AROS0161
00008C 985F                00030  162         BCL   ERROR01           BRANCH TO INDICATE STH, LH, OR XR     AROS0162
                                  163 *                               FAILURE                               AROS0163

00008E 1786      7     1          165         ST    R7,4(R1)          STORE ALL BITS ON FOR HALFWORD ON A   AROS0165
                                  166 *                               FULLWORD BOUNDARY                     AROS0166
000090 1305      3     1          167         LH    R3,4(R1)          LOAD FIRST HALFWORD OF THE FULL WORD  AROS0167
                                  168 *                               PREVIOUSLY STORED.                    AROS0168
000092 53C8      3     5          169         XR    R3,R5             WAS THIS HALFWORD MODIFIED?           AROS0169
000094 9867                00030  170         BCL   ERROR01           ST FAILURE                            AROS0170

000096 1507      5     1          172         LH    R5,6(R1)          LOAD SECOND HALFWORD OF THE FULLWORD  AROS0172
                                  173 *                               PREVIOUSLY STORED                     AROS0173
000098 75C8      5     7          174         XR    R5,R7             ARE REG 5 AND REG 7 EQUAL?            AROS0174
00009A 986D                00030  175         BCL   ERROR01           STORE INSTRUCTION FAILURE             AROS0175

00009C 1586      5     1          177         ST    R5,4(R1)          STORE ALL BITS OFF IN THE SECOND      AROS0177
                                  178 *                               HALFWORD                              AROS0178
00009E 0707      7     0          179         LH    R7,6(R0)          LOAD SECOND HALFWORD OF THE FULLWORD  AROS0179
                                  180 *                               PREVIOUSLY STORED                     AROS0180
0000A0 75C8      5     7          181         XR    R5,R7             ARE REG 5 AND REG 7 EQUAL ?           AROS0181
0000A2 9875                00030  182         BCL   ERROR01           STORE INSTRUCTION FAILURE             AROS0182
```

```
 LOC  OBJ CODE  R1S1M R2S2 ADDR   STMT   SOURCE STATEMENT                                                  DOS CL3-6 02/24/72

                                   185 *     THE FOLLOWING INSTRUCTIONS TEST THE BRANCH ON BIT INSTRUCTION.  * AROS0185

                                   187 *         THIS IS DONE BY CHANGING THE BRANCH ON BIT INSTRUCTION     * AROS0187
                                   188 *         EACH TIME THROUGH. BRANCH ON BIT IS TESTED NOT TO          * AROS0188
                                   189 *         BRANCH WHEN BIT IS OFF AND THEN TO BRANCH WHEN THE BIT     * AROS0189
                                   190 *         IS ON.                                                     * AROS0190

0000A4 80CE       1(0)             192          LRI   R1(0),X'CE'        ***** ADDRESS SENSITIVE *****        AROS0192
                                   193 *                                  SET UP BRANCH ON BIT INSTRUCTION     AROS0193
0000A6 8106       1(1)             194          LRI   R1(1),X'06'        ***** ADDRESS SENSITIVE *****        AROS0194
0000A8 83B4       3(1)             195          LRI   R3(1),X'B4'        ***** ADDRESS SENSITIVE *****        AROS0195
                                   196 *                                  SET UP ADDRESS FOR BRANCH ON BIT     AROS0196
                                   197 *                                  INSTRUCTION                          AROS0197
                                   198 *                                  ***** ADDRESS SENSITIVE *****        AROS0198
0000AA A806                 000B2  199          B     TEST06             BRANCH TO BEGIN TEST                 AROS0199

0000AC 9180       1(1)             201 TEST05   ARI   R1(1),X'80'        UPDATE INSTRUCTION TO BE TESTED      AROS0201
0000AE 98AF                 00002  202          BCL   TEST01             BRANCH INSTRUCTION HAS GONE THROUGH  AROS0202
                                   203 *                                  SIXTEEN ITERATIONS                   AROS0203

0000B0 D00E       1(0)             205          ORI   R1(0),X'0E'        CORRECT INSTRUCTION WHEN PROPAGATION AROS0205
                                   206 *                                  OCCURS OVER THE THREE BITS           AROS0206
                                   207 *                                  REPRESENTING REG 7                   AROS0207

0000B2 3181       1     3          209 TEST06   STH   R1,0(R3)           STORE BRANCH ON BIT INSTRUCTION      AROS0209
0000B4 CE06       7(0,0)   000BC  210          BB    R7(0,0),ERROR02    *** THIS INSTRUCTION CHANGES ***     AROS0210
                                   211 *                                  BRANCH IS ERROR WHEN REG 7 IS ZERO   AROS0211
0000B6 F6FF       7(0)             212          TRM   R7(0),X'FF'        IF BRANCH DID NOT OCCUR SHOULD IT    AROS0212
                                   213 *                                  HAVE?                                AROS0213
0000B8 9802                 000BC  214          BCL   ERROR02            YES IT SHOULD HAVE BUT DID NOT       AROS0214

0000BA 8811                 000AC  216          BZL   TEST05             BRANCH TO SET NEXT INSTRUCTION       AROS0216

0000BC 7004       0    70          218 ERROR02  OUT   0,STOP             BRANCH ON BIT INSTRUCTION FAILED     AROS0218
```

```
  LOC  OBJ CODE  R1S1M R2S2 ADDR   STMT   SOURCE STATEMENT                                    DOS CL3-6 02/24/72

                                    221 *     THE FOLLOWING INSTRUCTIONS CAUSE THE GROUP 1, 2, AND 3 REGISTERS* AROS0221
                                    222 *     TO BE OUTPUT IN ORDER TO CORRECT PARITY IN THE REGISTERS       * AROS0222

0000BE                              224 SMIN01   EQU   *                                                        AROS0224
0000BE 8174       1(1)              225          LRI   R1(1),X'74'       LOAD OUTPUT INSTRUCTION             AROS0225
                                    226 *                                 ***** ADDRESS SENSITIVE *****       AROS0226
0000C0 83C8       3(1)              227          LRI   R3(1),X'C8'       LOAD ADDRESS OF OUTPUT INSTRUCTION  AROS0227
                                    228 *                                 ***** ADDRESS SENSITIVE *****       AROS0228
0000C2                              229 SMIN02   EQU   *                                                        AROS0229
0000C2 9110       1(1)              230          ARI   R1(1),X'10'       UPDATE INSTRUCTION                  AROS0230
0000C4 F886       1(0,7)    000CC   231          BB    R1(0,7),SMIN04    BRANCH WHEN GROUP 1 IS CORRECTED    AROS0231

0000C6                              233 SMIN03   EQU   *                                                        AROS0233
0000C6 3181       1     3           234          STH   R1,0(R3)          STORE OUTPUT INSTRUCTION            AROS0234
0000C8 0084       0     08          235          OUT   R0,X'08'          ***** THIS INSTRUCTION IS CHANGED ** AROS0235
0000CA A80B               000C2     236          B     SMIN02            BRANCH TO CONTINUE UPDATING OF      AROS0236
                                    237 *                                 OUTPUT INSTRUCTION                  AROS0237

0000CC                              239 SMIN04   EQU   *                                                        AROS0239
0000CC D884       1(0,3)    000D2   240          BB    R1(0,3),ESCCHK1   BRANCH WHEN GROUP 2 AND 3 ARE     AROS0240
                                    241 *                                 CORRECTED                           AROS0241

0000CE 8010       1(0)              243          LRI   R1(0),X'10'       SET UP TO CORRECT GROUP 2 AND 3 REG  AROS0243
0000D0 A80D               000C6     244          B     SMIN03            BRANCH TO CORRECT PARITY OF GROUP 2 AROS0244
                                    245 *                                 AND GROUP 3 REGISTERS               AROS0245

                                    247 ************************************************************************ AROS0247
0000D2                              248 ESCCHK1  EQU   *                                                        AROS0248
0000D2 719C       1    79           249          IN    R1,X'79'          INPUT UTILITY REG FOR NO-ESCAPE BIT AROS0249
0000D4 F982       1(1,7)    000D8   250          BB    R1(1,7),LROS01    BRANCH IF BIT IS ON FOR NO ESCAPE   AROS0250
0000D6 AE24               006FC     251          B     ESCAPE1           BRANCH TO ESCAPE TO CORRECTED CODE  AROS0251
0006FC                              252 ESCAPE1  EQU   SROS+X'6FC'                                             AROS0252
                                    253 * THIS IS FOR ROS ESCAPE                                              AROS0253
                                    254 ************************************************************************ AROS0254
```

DATE MAR72
E.C 309538

```
 LOC  OBJ CODE  R1S1M R2S2 ADDR   STMT   SOURCE STATEMENT                                                  DOS CL3-6 02/24/72


                                   258 *     THE FOLLOWING INSTRUCTIONS SAVE THE INTERRUPT REQUEST GROUP 1,  * AROS0258
                                   259 *     MACHINE CHECK ERROR REGISTER, AND THE INTERRUPT REQUEST GROUP 1 * AROS0259
                                   260 *     FOR ADAPTERS AND INSURE THAT IPL LEVEL 1 REQUEST WAS THE CAUSE  * AROS0260
                                   261 *     OF THE INTERRUPT                                                 * AROS0261

0000D8                             263 LROS01   EQU   *                                                        AROS0263
0000D8 71DC      1    7D           264          IN    R1,MACHK          GET MACHINE CHECK ERROR REGISTER      AROS0264
0000DA 0185      1     0           265          STH   R1,4(R0)          SAVE MACHINE CHECK ERROR REGISTER     AROS0265

0000DC 716C      1    76           267          IN    R1,X'76'          GET INTERRUPT REQUEST GROUP 1 FOR     AROS0267
                                   268 *                                 ADAPTERS                              AROS0268
0000DE 0183      1     0           269          STH   R1,2(R0)          SAVE INTERRUPT REQUEST GROUP 1 FOR    AROS0269
                                   270 *                                 ADAPTERS                              AROS0270

0000E0 71EC      1    7E           272          IN    R1,INTGP1         GET INTERRUPT REGUEST GROUP 1         AROS0272
0000E2 0187      1     0           273          STH   R1,6(R0)          SAVE INTERRUPT REQUEST GROUP 1        AROS0273

0000E4 F902      1(1,6)    000E8   275          BB    R1(1,6),MIROS01   IS THIS AN IPL LEVEL 1 REQUEST ?      AROS0275
0000E6 7004      0    70           276          OUT   0,STOP                                                   AROS0276
```

DATE MAR72
E.C 309538

```
LOC  OBJ CODE  R1S1M R2S2 ADDR   STMT   SOURCE STATEMENT                                                  DOS CL3-6 02/24/72

                                  279 *     THIS IS THE BEGINNING OF THE CHANNEL HANDLING ROS                 * AROS0279


                                  282 *     THE FOLLOWING INSTRUCTIONS CLEAR REGISTERS TO BE USED, RESET      * AROS0282
                                  283 *     THE TEST MODE, ENABLE THE CHANNEL ADAPTER AND DETERMINE IF THE    * AROS0283
                                  284 *     SINGLE SUBCHANNEL ADDRESS IS ACTIVE.                              * AROS0284

0000E8                            286 MIROS01  EQU   *                                                        AROS0286
0000E8 33C8      3     3          287          XR    R3,R3              CLEAR REG 3                          AROS0287
0000EA 8110      1(1)             288          LRI   R1(1),X'10'        RESET TEST MODE                      AROS0288
0000EC 7194      1    79          289          OUT   R1,X'79'           OUTPUT TO RESET TEST MODE            AROS0289

0000EE 8108      1(1)             291          LRI   R1(1),X'08'        SET CHANNEL INTERFACE ENABLE         AROS0291
0000F0 6174      1    67          292          OUT   R1,ADERCON         OUTPUT TO SET CHANNEL INTERFACE      AROS0292
                                  293 *                                 ENABLE                               AROS0293

0000F2 617C      1    67          295          IN    R1,ADERCON         INPUT TO CHECK THAT THE CHANNEL      AROS0295
                                  296 *                                 INTERFACE IS ENABLED                 AROS0296
0000F4 E902      1(1,4)    000F8  297          BB    R1(1,4),MIROS02    BRANCH IF CHANNEL INTERFACE IS       AROS0297
                                  298 *                                 ENABLED                              AROS0298

0000F6 A811                000E8  300          B     MIROS01            BRANCH TO RETRY ENABLE               AROS0300


0000F8                            303 MIROS02  EQU   *                                                        AROS0303
0000F8 8602      7(0)             304          LRI   R7(0),X'02'        SET IPL REQUIRED SENSE               AROS0304
0000FA E9B4      1(1,5)    00130  305          BB    R1(1,5),MIROS09    BRANCH IF SINGLE SUBCHANNEL ADDRESS  AROS0305
                                  306 *                                 IS ACTIVE                            AROS0306
```

DATE MAR72
E.C. 309538

```
 LOC  OBJ CODE  R1S1M R2S2 ADDR   STMT   SOURCE STATEMENT                                                  DOS CL3-6 02/24/72

                                  309 *     THE FOLLOWING INSTRUCTIONS SET DEVICE END AND UNIT CHECK STATUS * AROS0309
                                  310 *     AND PREPARE FOR ITS OUTPUT.                                     * AROS0310

0000FC 8706      7(1)             312          LRI   R7(1),X'06'        SET DEVICE END AND UNIT CHECK STATUS AROS0312
0000FE                            313 MIROS03  EQU   *                                                      AROS0313
0000FE 8160      1(1)             314          LRI   R1(1),X'60'        SET PROGRAM LEVEL 3 INTERRUPT AND    AROS0314
                                  315 *                                 RESET CHANNEL ADAPTER LEVEL 1        AROS0315
                                  316 *                                 INTERRUPT                            AROS0316
000100 6174      1    67          317          OUT   R1,ADERCON         SET LEVEL 3 INTERRUPT                AROS0317

000102 820F      3(0)             319          LRI   R3(0),X'0F'        SET RN FINAL TRANSFER SEQ, INITIAL   AROS0319
                                  320 *                                 SELECTION RESET, DATA/STATUS SERVICE AROS0320
                                  321 *                                 RESET AND PROGRAM INTERRUPT RESET    AROS0321


                                  324 *     THE FOLLOWING INSTRUCTIONS LOOP WAITING FOR A LEVEL 1 INTERRUPT * AROS0324
                                  325 *     INDICATING AN ERROR OR A LEVEL 3 INTERRUPT INDICATING THAT      * AROS0325
                                  326 *     STATUS MAY BE PRESENTED.                                        * AROS0326

000104                            328 MIROS04  EQU   *                                                      AROS0328
000104 716C      1    76          329          IN    R1,X'76'           GET LEVEL 1 INTERRUPT REQUESTS       AROS0329
000106 E888      1(0,5)    00110  330          BB    R1(0,5),MIROS05    BRANCH IF CA LEVEL 1 INTERRUPT       AROS0330

000108 717C      1    77          332          IN    R1,X'77'           GET LEVEL 3 INTERRUPT REQUESTS       AROS0332
00010A D990      1(1,3)    0011C  333          BB    R1(1,3),MIROS06    BRANCH IF DATA/STATUS SERVICE LEVEL  AROS0333
                                  334 *                                 3 INTERRUPT                          AROS0334
00010C E936      1(1,4)    00144  335          BB    R1(1,4),MIROS12    LEV 3 INIT SEL INT                   AROS0335

00010E A80D                00104  337          B     MIROS04                                                 AROS0337
```

DATE MAR72
E.C. 309538

```
LOC  OBJ CODE  R1S1M R2S2 ADDR   STMT   SOURCE STATEMENT                                                    DOS CL3-6 02/24/72

                                  340 *     THE FOLLOWING INSTRUCTIONS SET SENSE FOR A CHANNEL ADAPTER LEVEL* AROS0340
                                  341 *     1 INTERRUPT, RESET THE LEVEL 1 INTERRUPT, AND IF THE CHANNEL IS * AROS0341
                                  342 *     ACTIVE SET UP THE STATUS THAT IS TO BE PRESENTED.              * AROS0342

000110                            344 MIROS05  EQU   *                                                       AROS0344
000110 8612      7(0)             345          LRI   R7(0),X'12'        SET EQUIPMENT CHECK AND IPL REQUIRED AROS0345
                                  346 *                                 SENSE                                AROS0346

000112 617C      1    67          348          IN    R1,ADERCON                                            AROS0348
000114 E99E      1(1,5)    00134   349          BB    R1(1,5),MIROS10    BRANCH IF SINGLE SUBCHANNEL ADDRESS  AROS0349
                                  350 *                                 IS ACTIVE                            AROS0350

000116 8120      1(1)             352          LRI   R1(1),X'20'        SET BIT FOR RESET OF L 1 INTERRUPT   AROS0352
000118 6174      1    67          353          OUT   R1,ADERCON         RESET LEVEL 1 INTERRUPT              AROS0353

00011A A808                00124   355          B     MIROS08                                               AROS0355

                                  357 *     THE FOLLOWING INSTRUCTIONS OUTPUT THE STATUS AND RESET THE     * AROS0357
                                  358 *     PROGRAM LEVEL 3 INTERRUPT                                      * AROS0358

00011C                            360 MIROS06  EQU   *                                                       AROS0360
00011C 6764      7    66          361          OUT   R7,RNSTAT          OUTPUT STATUS                        AROS0361

00011E                            363 MIROS07  EQU   *                                                       AROS0363
00011E 617C      1    67          364          IN    R1,ADERCON         INPUT TO GET SINGLE SUBCHANNEL       AROS0364
                                  365 *                                 ADDRESS                              AROS0365
000120 6134      1    63          366          OUT   R1,STSVAD          OUTPUT TO SET SINGLE SUBCHANNEL      AROS0366
                                  367 *                                 ADDRESS INTO SERVICE ADDRESS REG     AROS0367
000122 6324      3    62          368          OUT   R3,SERCON          OUTPUT TO RESET LEVEL 3              AROS0368

                                  370 *     THE FOLLOWING INSTRUCTIONS WAIT FOR A CHANNEL ADAPTER LEVEL 1  * AROS0370
                                  371 *     INTERRUPT,   INTIAL SELECTION LEVEL 3 INTERRUPT, OR A DATA     * AROS0371
                                  372 *     SERVICE LEVEL 3 INTERRUPT.                                     * AROS0372

000124                            374 MIROS08  EQU   *                                                       AROS0374
000124 716C      1    76          375          IN    R1,X'76'           GET LEVEL 1 INTERRUPT REQUESTS       AROS0375
000126 E899      1(0,5)    00110   376          BB    R1(0,5),MIROS05    BRANCH IF LEVEL 1 INTERRUPT          AROS0376

000128 717C      1    77          378          IN    R1,X'77'           GET LEVEL 3 INTERRUPT REQUESTS       AROS0378
00012A E918      1(1,4)    00144   379          BB    R1(1,4),MIROS12    LEVEL 3 INITIAL SELECTION INTERRUPT  AROS0379

00012C D9FC      1(1,3)    001AA   381          BB    R1(1,3),MIROS25    LEVEL 3 DATA SERVICE INTERRUPT       AROS0381

00012E A80D                00124   383          B     MIROS08                                               AROS0383
```

```
  LOC  OBJ CODE  R1S1M R2S2 ADDR   STMT   SOURCE STATEMENT                                    DOS CL3-6 02/24/72

                                     386 *     THE FOLLOWING INSTRUCTIONS DETERMINE THE ACTION REQUIRED FOR    * AROS0386
                                     387 *     ENTERING ROS WITH AN ACTIVE SINGLE SUBCHANNEL.                  * AROS0387

000130                               389 MIROS09  EQU   *                                                        AROS0389
000130 717C      1    77             390          IN    R1,X'77'                                                  AROS0390

000132 E904      1(1,4)    00138     392          BB    R1(1,4),MIROS11     BRANCH IF INITIAL SELECTION LEVEL 3   AROS0392
                                     393 *                                 INTERRUPT                             AROS0393

000134                               395 MIROS10  EQU   *                                                        AROS0395
000134 870E      7(1)                396          LRI   R7(1),X'0E'         SET CHANNEL END, DEVICE END, AND      AROS0396
                                     397 *                                 UNIT CHECK STATUS                     AROS0397

000136 A83B           000FE          399          B     MIROS03             BRANCH TO DO OUTPUT OF STATUS         AROS0399

000138                               402 MIPOS11  EQU   *                                                        AROS0402
000138 611C      1    61             403          IN    R1,INSEADCM         GET ADDRESS OF SUBCHANNEL REQUESTING  AROS0403
                                     404 *                                 SERVICE                               AROS0404

00013A 657C      5    67             406          IN    R5,ADERCON          GET ADDRESS OF SINGLE SUBCHANNEL      AROS0406

00013C 8100      1(1)                408          LRI   R1(1),X'00'         CLEAR BYTE 1 OF REG 1                 AROS0408
00013E 8500      5(1)                409          LRI   R5(1),X'00'         CLEAR BYTE 1 OF REG 5                 AROS0409

000140 15C8      5    1              411          XR    R5,R1               ARE ADDRESSES EQUAL                   AROS0411
000142 9811           00134          412          BCL   MIROS10             BRANCH IF NOT EQUAL                   AROS0412
```

DATE MAR72

E.C. 309538

```
LOC  OBJ CODE  R1S1M R2S2 ADDR   STMT   SOURCE STATEMENT                                                DOS CL3-6 02/24/72

                                  415 *     THE FOLLOWING INSTRUCTIONS DETERMINE THE REASON FOR THE INITIAL * AROS0415
                                  416 *     SELECTION LEVEL 3 INTERRUPT AND BRANCH TO THE CORRECT HANDLING  * AROS0416
                                  417 *     ROUTINE FOR EACH CAUSE OF THE LEVEL 3 INTERRUPT.                * AROS0417

000144                            419 MIROS12  EQU   *                                                      AROS0419
000144 8206      3(0)             420          LRI   R3(0),X'06'        SET INITIAL SELECTION RESET AND     AROS0420
                                  421 *                                 DATA/STATUS SERVICE RESET           AROS0421

000146 610C      1    60          423          IN    R1,INSECO          INPUT TO FIND REASON FOR INITIAL    AROS0423
                                  424 *                                 SELECTION LEVEL 3 INTERRUPT         AROS0424

000148 F8D8      1(0,7)    001A2   426          BB    R1(0,7),MIROS24    BRANCH IF SYSTEM RESET              AROS0426

00014A C8CC      1(0,1)    00198   428          BB    R1(0,1),MIROS23    BRANCH IF INTERFACE DISCONNECT      AROS0428

00014C F831      1(0,6)    0011E   430          BB    R1(0,6),MIROS07    BRANCH IF STACKED STATUS HAS BEEN   AROS0430
                                  431 *                                 CLEARED                             AROS0431

00014E E8B6      1(0,5)    00186   433          BB    R1(0,5),MIROS20    BRANCH IF STACKED INITIAL STATUS    AROS0433

000150 D8AA      1(0,3)    0017C   435          BB    R1(0,3),MIROS18    BRANCH IF BUS OUT CHECK             AROS0435

000152 C808      1(0,0)    0015C   437          BB    R1(0,0),MIROS15    BRANCH IF INITIAL SELECTION         AROS0437


000154 8612      7(0)             440          LRI   R7(0),X'12'        SET IPL REQUIRED AND EQUIPMENT CHECK AROS0440

000156                            442 MIROS13  EQU   *                                                      AROS0442
000156 870E      7(1)             443          LRI   R7(1),X'0E'        SET CHANNEL END, DEVICE END, AND    AROS0443
                                  444 *                                 UNIT CHECK STATUS                   AROS0444

000158                            446 MIROS14  EQU   *                                                      AROS0446
000158 D208      3(0)             447          ORI   R3(0),X'08'        SET FINAL STATUS TRANSFER STATE     AROS0447

00015A A841                0011C   449          B     MIROS06            BRANCH TO OUTPUT STATUS             AROS0449
```

```
LOC  OBJ CODE  R1S1M R2S2 ADDR   STMT   SOURCE STATEMENT                                                DOS CL3-6 02/24/72

                                  452 *     THE FOLLOWING INSTRUCTIONS DETERMINE THE COMMAND THAT IS ACTIVE * AROS0452
                                  453 *     FOR THE INITIAL SELECTION                                      * AROS0453

00015C                            455 MIROS15  EQU   *                                                      AROS0455
00015C 611C      1    61          456          IN    R1,INSEADCM        INPUT COMMAND THAT IS ACTIVE FOR     AROS0456
                                  457 *                                  INITIAL SELECTION                    AROS0457

00015E 80FF      1(0)             459          LRI   R1(0),X'FF'        CONDITION BYTE ZERO FOR OVERFLOW     AROS0459

000160 91F6      1(1)             461          ARI   R1(1),X'F6'        ADDITION OF F6 SO THAT ANY COMMAND   AROS0461
                                  462 *                                  OF 0A OR GREATER WILL CAUSE A CARRY  AROS0462

000162 9814                00178  464          BCL   MIROS17            BRANCH IF COMMAND NOT VALID FOR      AROS0464
                                  465 *                                  SINGLE SUBCHANNEL ADDRESS            AROS0465

000164 9101      1(1)             467          ARI   R1(1),X'01'        ADD ONE TO CHECK FOR COMMAND X'09'   AROS0467
000166 980C                00174  468          BCL   MIROS16            BRANCH IF WRITE BREAK POINT COMMAND  AROS0468

000168 9103      1(1)             470          ARI   R1(1),X'03'        ADD THREE TO CHECK FOR X'06', X'07', AROS0470
                                  471 *                                  OR X'08' COMMAND                     AROS0471
00016A 980C                00178  472          BCL   MIROS17            BRANCH IF COMMAND IS NOT VALID FOR   AROS0472
                                  473 *                                  SINGLE SUBCHANNEL ADDRESS            AROS0473

00016C 9101      1(1)             475          ARI   R1(1),X'01'        ADDITION OF 01 SO THAT IPL COMMAND   AROS0475
                                  476 *                                  WILL CAUSE A CARRY                   AROS0476
00016E 9858                001C8  477          BCL   MIROS30            BRANCH IF IPL COMMAND                AROS0477

000170 9101      1(1)             479          ARI   R1(1),X'01'        ADDITION OF 01 SO THAT SENSE COMMAND AROS0479
                                  480 *                                  WILL CAUSE A CARRY                   AROS0480
000172 981C                00190  481          BCL   MIROS21            BRANCH IF SENSE COMMAND              AROS0481
```

```
LOC  OBJ CODE  R1S1M R2S2 ADDR   STMT   SOURCE STATEMENT                                                DOS CL3-6 02/24/72

                                  484 *     THE FOLLOWING INSTRUCTIONS SET SENSE DATA IN REGISTER 7          * AROS0484

000174                            486 MIROS16  EQU   *                                                      AROS0486
000174 8602      7(0)             487          LRI   R7(0),X'02'        SET IPL REQUIRED SENSE              AROS0487
000176 A823                00156  488          B     MIROS13            BRANCH TO SET AND OUTPUT STATUS     AROS0488

000178                            490 MIROS17  EQU   *                                                      AROS0490
000178 8682      7(0)             491          LRI   R7(0),X'82'        SET COMMAND REJECT AND IPL REQUIRED AROS0491
                                  492 *                                 SENSE                               AROS0492
00017A A827                00156  493          B     MIROS13            BRANCH TO SET AND OUTPUT STATUS     AROS0493

00017C                            495 MIROS18  EQU   *                                                      AROS0495
00017C 8622      7(0)             496          LRI   R7(0),X'22'        SET BUS-OUT CHECK AND IPL REQUIRED  AROS0496
                                  497 *                                 SENSE                               AROS0497
00017E A863                0011E  498          B     MIROS07            BRANCH TO SET AND OUTPUT STATUS     AROS0498

000180                            500 MIROS19  EQU   *                                                      AROS0500
000180 8622      7(0)             501          LRI   R7(0),X'22'        SET BUS-OUT CHECK AND IPL REQUIRED  AROS0501
                                  502 *                                 SENSE                               AROS0502
000182 8702      7(1)             503          LRI   R7(1),X'02'        SET UNIT CHECK STATUS               AROS0503
000184 A82F                00158  504          B     MIROS14            BRANCH TO PRESENT STATUS            AROS0504

                                  507 *     THE FOLLOWING INSTRUCTIONS DETERMINE THE PROPER STATUS TO BE     * AROS0507
                                  508 *     SET FOR STACKED INITIAL STATUS.                                  * AROS0508

000186                            510 MIROS20  EQU   *                                                      AROS0510
000186 D889      1(0,3)    00180  511          BB    R1(0,3),MIROS19    BRANCH IF BUS OUT CHECK             AROS0511

000188 611C      1    61          513          IN    R1,INSEADCM        INPUT COMMAND                       AROS0513
00018A F1FF      1(1)             514          TRM   R1(1),X'FF'        TEST FOR COMMAND                    AROS0514
00018C 882E                001BC  515          BZL   MIROS27            BRANCH DUE TO TEST I/O COMMAND      AROS0515

00018E A828                001B8  517          B     MIROS26            BRANCH DUE TO NO-OP COMMAND         AROS0517
```

```
  LOC   OBJ CODE  R1S1M R2S2 ADDR   STMT   SOURCE STATEMENT                                        DOS CL3-6 02/24/72

                                    520 *     OUTPUT SENSE INFORMATION                                      * AROS0520

000190                              522 MIROS21  EQU   *                                                      AROS0522
000190 6744       7    64           523          OUT   R7,DATA12          LOAD SENSE DATA                   AROS0523
000192 D280       3(0)              524          ORI   R3(0),X'80'        SET OUTBOUND DATA                 AROS0524
000194 8301       3(1)              525          LRI   R3(1),X'01'        SET CODE COUNT AT BINARY 1        AROS0525
000196                              526 MIROS22  EQU   *                                                      AROS0526
000196 A87B                 0011E   527          B     MIROS07            BRANCH TO DO OUTPUT               AROS0527

                                    531 *     THE FOLLOWING INSTRUCTIONS TAKE CARE OF SYSTEM RESET, SELECTIVE * AROS0531
                                    532 *     RESET, AND STATUS CLEARED.                                    * AROS0532

000198                              534 MIROS23  EQU   *                                                      AROS0534
000198 611C       1    61           535          IN    R1,INSEADCM        INPUT FOR COMMAND COMPARE         AROS0535
00019A 91FB       1(1)              536          ARI   R1(1),X'FB'        ADD CONSTANT SO IPL COMMAND CAUSES AROS0536
                                    537 *                                  A ZERO RESULT                     AROS0537
00019C F1FF       1(1)              538          TRM   R1(1),X'FF'        IS RESULT ZERO                    AROS0538
00019E 8844                 001E4   539          BZL   MIROS34            BRANCH TO CHECK IPL TRANSFER      AROS0539

0001A0 A82F                 00174   541          B     MIROS16            BRANCH TO SET SENSE AND STATUS    AROS0541

0001A2                              543 MIROS24  EQU   *                                                      AROS0543
0001A2 8602       7(0)              544          LRI   R7(0),X'02'        SET IPL REQUIRED SENSE            AROS0544
0001A4 8110       1(1)              545          LRI   R1(1),X'10'        SET RESET SYSTEM RESET            AROS0545
0001A6 6174       1    67           546          OUT   R1,ADERCON         OUTPUT TO RESET SYSTEM RESET      AROS0546

0001A8 A887                 00124   548          B     MIROS08                                              AROS0548
```

DATE MAR72
E.C. 309538

```
LOC  OBJ CODE  R1S1M R2S2 ADDR   STMT   SOURCE STATEMENT                                                DOS CL3-6 02/24/72

                                  551 *     THE FOLLOWING INSTRUCTIONS DETERMINE THE REASON FOR THE DATA    * AROS0551
                                  552 *     SERVICE LEVEL 3 INTERRUPT AND BRANCH TO THE CORRECT HANDLING    * AROS0552
                                  553 *     ROUTINE FOR EACH CAUSE OF THE LEVEL 3 INTERRUPT.                * AROS0553

0001AA                            555 MIROS25  EQU   *                                                      AROS0555
0001AA 8202      3(0)             556          LRI   R3(0),X'02'        SET DATA/STATUS SERVICE RESET       AROS0556
0001AC 612C      1    62          557          IN    R1,SERCON          INPUT TO FIND REASON FOR DATA       AROS0557
                                  558 *                                 SERVICE LEVEL 3 INTERRUPT           AROS0558
0001AE D98C      1(1,3)    001BC   559          BB    R1(1,3),MIROS27    BRANCH IF STACKED STATUS            AROS0559

0001B0 E892      1(0,5)    001C4   561          BB    R1(0,5),MIROS29    BRANCH IF CHANNEL STOP OR INTERFACE AROS0561
                                  562 *                                 DISCONNECT                          AROS0562

0001B2 C90C      1(1,0)    001C0   564          BB    R1(1,0),MIROS28    BRANCH IF BUS-OUT CHECK             AROS0564

0001B4 E821      1(0,4)    00196   566          BB    R1(0,4),MIROS22    BRANCH DUE TO FINAL STATUS TAKEN    AROS0566

0001B6 C89C      1(0,1)    001D4   568          BB    R1(0,1),MIROS32    BRANCH IF IPL COMMAND               AROS0568

0001B8                            570 MIROS26  EQU   *                                                      AROS0570
0001B8 870C      7(1)             571          LRI   R7(1),X'0C'        SET CHANNEL END AND DEVICE END      AROS0571
                                  572 *                                 STATUS                              AROS0572
0001BA A865                00158   573          B     MIROS14            BRANCH TO OUTPUT STATUS             AROS0573

0001BC                            575 MIROS27  EQU   *                                                      AROS0575
0001BC D208      3(0)             576          ORI   R3(0),X'08'        SET FINAL STATUS SEQ                AROS0576
0001BE A8A3                0011E   577          B     MIROS07            BRANCH TO RESET LEVEL 3 INTERRUPT   AROS0577


                                  580 *     THE FOLLOWING INSTRUCTIONS SET SENSE INFORMATION INTO REGISTER 7* AROS0580

0001C0                            582 MIROS28  EQU   *                                                      AROS0582
0001C0 8622      7(0)             583          LRI   R7(0),X'22'        SET BUS OUT CHECK AND IPL REQUIRED  AROS0583
                                  584 *                                 SENSE                               AROS0584
0001C2 A86F                00156   585          B     MIROS13                                                AROS0585

0001C4                            587 MIROS29  EQU   *                                                      AROS0587
0001C4 C89E      1(0,1)    001E4   588          BB    R1(0,1),MIROS34    BRANCH IF IPL COMMAND               AROS0588

0001C6 A855                00174   590          B     MIROS16            BRANCH TO SET SENSE AND STATUS      AROS0590
```

```
  LOC  OBJ CODE  R1S1M R2S2 ADDR   STMT   SOURCE STATEMENT                                    DOS CL3-6 02/24/72


                                    594 *     THE FOLLOWING INSTRUCTIONS SET STARTING ADDRESS AND DATA          AROS0594
                                    595 *     SERVICE MODE ALSO  RESETTING INIT SEL LEVEL 3 INT                 AROS0595

0001C8                              597 MIROS30  EQU   *                                                       AROS0597
0001C8 8404      5(0)               598          LRI   R5(0),X'04'       SET START ADDRESS IN REG 5           AROS0598
0001CA 8500      5(1)               599          LRI   R5(1),X'00'                                            AROS0599

0001CC 5583      5     5            601          STH   R5,2(R5)          STORE BAD COUNT AT LOCATION X'402'   AROS0601

0001CE                              603 MIROS31  EQU   *                                                       AROS0603
0001CE D240      3(0)               604          ORI   R3(0),X'40'       SET INBOUND DATA TRANSFER            AROS0604
0001D0 8302      3(1)               605          LRI   R3(1),X'02'       CT=2                                 AROS0605
0001D2 A8B7                0011E   606          B     MIROS07           BRANCH FOR INTERRUPT HANDLING        AROS0606


                                    610 *     THE FOLLOWING INSTRUCTIONS TRANSFER TWO BYTES, CHECK FOR      * AROS0610
                                    611 *     MAXIMUM COUNT ERROR, STORE TWO BYTES, AND BUMP STORAGE ADDRESS * AROS0611
                                    612 *     BY TWO.                                                       * AROS0612

0001D4                              614 MIROS32  EQU   *                                                       AROS0614
0001D4 EC08      5(0,4)     001DE   615          BB    R5(0,4),MIROS33   MAXIMUM COUNT EXCEEDED              AROS0615

0001D6 614C      1    64            617          IN    R1,X'64'          PUT INBOUND DATA IN REG 1            AROS0617
0001D8 5181      1     5            618          STH   R1,0(R5)          STORE FIRST TWO DATA BYTES           AROS0618

0001DA 9502      5(1)               620          ARI   R5(1),X'02'       BUMP STORAGE ADDRESS BY TWO          AROS0620

0001DC A811                0001CE   622          B     MIROS31                                                AROS0622
```

DATE MAR72
E.C. 309538

```
 LOC  OBJ CODE  R1S1M R2S2 ADDR   STMT   SOURCE STATEMENT                                  DOS CL3-6 02/24/72

                                    625 *     THE FOLLOWING INSTRUCTIONS WILL DO A COUNT COMPARE, RESET          AROS0625
                                    626 *     IPL LEVEL 1 AND BRANCH TO START OF LOADED MODULE                   AROS0626

 0001DE                             628 MIROS33  EQU   *                                                         AROS0628
 0001DE 8602      7(0)              629          LRI   R7(0),X'02'      SET IPL REQUIRED SENSE                   AROS0629
 0001E0 870F      7(1)              630          LRI   R7(1),X'0F'      SET CHANNEL END, DEVICE END, UNIT        AROS0630
                                    631 *                              CHECK, AND UNIT EXCEPTION STATUS         AROS0631
 0001E2 A88D              00158     632          B     MIROS14                                                    AROS0632


 0001E4                             636 MIROS34  EQU   *                                                         AROS0636
 0001E4 8004      1(0)              637          LRI   R1(0),X'04'      LOAD HI ORDER BYTE WITH ADDRESS          AROS0637
                                    638 *                              OF BYTE CT                               AROS0638
 0001E6 8102      1(1)              639          LRI   R1(1),X'02'      LOAD  LOW ORDER BYTE                     AROS0639
 0001E8 1101      1     1           640          LH    R1,0(R1)         PUT BYTE CT IN REG 1                     AROS0640

 0001EA 9004      1(0)              642          ARI   R1(0),X'04'      ADD X '400' TO BYTE COUNT                AROS0642

 0001EC 51C8      1     5           644          XR    R1,R5            COMPARE KNOWN AND REAL BYTE CTS          AROS0644
 0001EE 9813              001DE     645          BCL   MIROS33          BRANCH TO SET UNIT CE DE UC IPL REQ      AROS0645

 0001F0 80C0      1(0)              647          LRI   R1(0),X'C0'      SET BIT TO RESET IPL LEV 1 & CCU CK      AROS0647
 0001F2 7174      1     77          648          OUT   R1,X'77'         RESET  IPL  LEV 1 IN REG 77              AROS0648

 0001F4 8012      1(0)              650          LRI   R1(0),X'12'      SET BIT FOR CE STATUS TRANSFER           AROS0650
 0001F6 6124      1     62          651          OUT   R1,X'62'         CHANNEL END STATUS SEQUENCE REQ          AROS0651

 0001F8 8001      1(0)              653          LRI   R1(0),X'01'      SET UP FOR XFER TO LOADED MODULE         AROS0653
 0001FA 81FE      1(1)              654          LRI   R1(1),X'FE'                                               AROS0654
 0001FC 1001      0     1           655          LH    R0,0(R1)         FORCE BRANCH TO LOADED MODULE            AROS0655
 0001FE 0404                        656          DC    X'0404'                                                   AROS0656
 000200                             657 SMINEND  EQU   *                                                         AROS0657

                                    659 *  END OF ROS CONTAINED CODE FOR MINI CHANNEL ADAPTER (TYPE 1)          AROS0659
```

DATE MAR72
E.C. 309538

DATE MAR72
E.C. 309538

```
 LOC  OBJ CODE  R1S1M R2S2 ADDR   STMT   SOURCE STATEMENT                                    DOS CL3-6 02/24/72

00007E                            662 INTGP1   EQU   X'7E'      LEVEL 1 AND 2 INTERRUPT GROUP      AROS0662
00007D                            663 MACHK    EQU   X'7D'      MACHINE CHECKS                     AROS0663
000070                            664 STOP     EQU   X'70'      HARDSTOP                           AROS0664
000000                            665 R0       EQU   0                                             AROS0665
000001                            666 R1       EQU   1                                             AROS0666
000002                            667 R2       EQU   2                                             AROS0667
000003                            668 R3       EQU   3                                             AROS0668
000004                            669 R4       EQU   4                                             AROS0669
000005                            670 R5       EQU   5                                             AROS0670
000006                            671 R6       EQU   6                                             AROS0671
000007                            672 R7       EQU   7                                             AROS0672
000060                            673 INSECO   EQU   X'60'                                         AROS0673
000061                            674 INSEADCM EQU   X'61'                                         AROS0674
000062                            675 SERCON   EQU   X'62'                                         AROS0675
000063                            676 STSVAD   EQU   X'63'                                         AROS0676
000064                            677 DATA12   EQU   X'64'                                         AROS0677
000066                            678 RNSTAT   EQU   X'66'                                         AROS0678
000067                            679 ADERCON  EQU   X'67'                                         AROS0679
                                  680          END                                                 AROS0680
```

CROSS-REFERENCE P/N 1785342 LOGIC: CWI23

SYMBOL	LEN	VALUE	DEFN															
ADERCON	00001	000067	00679	0292	0295	0317	0348	0353	0364	0406	0546							
DATA12	00001	000064	00677	0523														
ERROR01	00002	000030	00080	0085	0087	0092	0098	0101	0117	0134	0137	0146	0156	0162	0170	0175	0182	
ERROR02	00002	0000BC	00218	0210	0214													
ESCAPE1	00001	0006FC	00252	0251														
ESCCHK1	00001	0000D2	00248	0240														
INSEADCM	00001	000061	00674	0403	0456	0513	0535											
INSECO	00001	000060	00673	0423														
INTGP1	00001	00007E	00662	0272														
LROS01	00001	0000D8	00263	0250														
MACHK	00001	00007D	00663	0264														
MIROS01	00001	0000E8	00286	0275	0300													
MIROS02	00001	0000F8	00303	0297														
MIROS03	00001	0000FE	00313	0399														
MIROS04	00001	000104	00328	0337														
MIROS05	00001	000110	00344	0330	0376													
MIROS06	00001	00011C	00360	0333	0449													
MIROS07	00001	00011E	00363	0430	0498	0527	0577	0606										
MIROS08	00001	000124	00374	0355	0383	0548												
MIROS09	00001	000130	00389	0305														
MIROS10	00001	000134	00395	0349	0412													
MIROS11	00001	000138	00402	0392														
MIROS12	00001	000144	00419	0335	0379													
MIROS13	00001	000156	00442	0488	0493	0585												
MIROS14	00001	000158	00446	0504	0573	0632												
MIROS15	00001	00015C	00455	0437														
MIROS16	00001	000174	00486	0468	0541	0590												
MIROS17	00001	000178	00490	0464	0472													
MIROS18	00001	00017C	00495	0435														
MIROS19	00001	000180	00500	0511														
MIROS20	00001	000186	00510	0433														
MIROS21	00001	000190	00522	0481														
MIROS22	00001	000196	00526	0566														
MIROS23	00001	000198	00534	0428														
MIROS24	00001	0001A2	00543	0426														
MIROS25	00001	0001AA	00555	0381														
MIROS26	00001	0001B8	00570	0517														
MIROS27	00001	0001BC	00575	0515	0559													
MIROS28	00001	0001C0	00582	0564														
MIROS29	00001	0001C4	00587	0561														
MIROS30	00001	0001C8	00597	0477														
MIROS31	00001	0001CE	00603	0622														
MIROS32	00001	0001D4	00614	0568														
MIROS33	00001	0001DE	00628	0615	0645													
MIROS34	00001	0001E4	00636	0539	0588													
RELOCF	00001	000000	00013	0018														
RNSTAT	00001	000066	00678	0361														
R0	00001	000000	00665	0052	0052	0053	0054	0056	0057	0059	0060	0062	0063	0065	0066	0068	0069	0071
				0072	0179	0235	0265	0269	0273	0655								
R1	00001	000001	00666	0037	0038	0054	0084	0086	0089	0090	0091	0094	0095	0096	0100	0103	0104	0113
				0114	0115	0116	0127	0132	0139	0143	0145	0152	0153	0154	0159	0160	0165	0167

DATE MAR72
E.C. 309538

CROSS-REFERENCE P/N 1785343 LOGIC: CWI24

SYMBOL	LEN	VALUE	DEFN													
				0172	0177	0192	0194	0201	0205	0209	0225	0230	0231	0234	0240	0243	0249	0250
				0264	0265	0267	0269	0272	0273	0275	0288	0289	0291	0292	0295	0297	0305	0314
				0317	0329	0330	0332	0333	0335	0348	0349	0352	0353	0364	0366	0375	0376	0378
				0379	0381	0390	0392	0403	0408	0411	0423	0426	0428	0430	0433	0435	0437	0456
				0459	0461	0467	0470	0475	0479	0511	0513	0514	0535	0536	0538	0545	0546	0557
				0559	0561	0564	0566	0568	0588	0617	0618	0637	0639	0640	0640	0642	0644	0647
				0648	0650	0651	0653	0654	0655									
R2	00001	000002	00667	0057														
R3	00001	000003	00668	0060	0133	0136	0141	0154	0155	0160	0161	0167	0169	0195	0209	0227	0234	0287
				0287	0319	0368	0420	0447	0524	0525	0556	0576	0604	0605				
R4	00001	000004	00669	0063														
R5	00001	000005	00670	0066	0131	0133	0145	0159	0161	0169	0172	0174	0177	0181	0406	0409	0411	0598
				0599	0601	0601	0615	0618	0620	0644								
R6	00001	000006	00671	0069														
R7	00001	000007	00672	0034	0039	0040	0072	0123	0123	0125	0129	0136	0139	0153	0155	0165	0174	0179
				0181	0210	0212	0304	0312	0345	0361	0396	0440	0443	0487	0491	0496	0501	0503
				0523	0544	0571	0583	0629	0630									
SERCON	00001	000062	00675	0368	0557													
SMINEND	00001	000200	00657															
SMINST	00001	000000	00030	0125														
SMIN01	00001	0000BE	00224	0035														
SMIN02	00001	0000C2	00229	0236														
SMIN03	00001	0000C6	00233	0244														
SMIN04	00001	0000CC	00239	0231														
SROS	00001	000000	00012	0018	0252													
STARTMI	00001	000010	00051															
STOP	00001	000070	00664	0031	0080	0218	0276											
STSVAD	00001	000063	00676	0366														
TEST01	00001	000002	00033	0202														
TEST02	00002	000034	00084	0079														
TEST03	00001	000056	00108	0127														
TEST04	00001	000058	00112	0105														
TEST05	00002	0000AC	00201	0216														
TEST06	00002	0000B2	00209	0041	0199													

NO STATEMENTS FLAGGED IN THIS IFTAMBLY

DATE MAR72
E.C. 309538

****

SIMULATION RUN LISTING FOR CA TYPE 1 ROS INSTRUCTION TEST

AN X ENTRY IN A REGISTER FIELD IS EQUAL TO 1,
A Y ENTRY IN A REGISTER FIELD IS EQUAL TO 2

****

INST ADDR	MACH CODE	INST MNEM	CZ LL	P L	REG0 (IAR)	REG1	REG3	REG5	REG7
0010	0082	ST	00	1	000012				
0012	0014	OUT	00	1	000014				
0014	0186	ST	00	1	000016				
0016	0024	OUT	00	1	000018				
0018	028A	ST	00	1	00001A				
001A	0034	OUT	00	1	00001C				
001C	038E	ST	00	1	00001E				
001E	0044	OUT	00	1	000020				
0020	0492	ST	00	1	000022				
0022	0054	OUT	00	1	000024				
0024	0596	ST	00	1	000026				
0026	0064	OUT	00	1	000028				
0028	069A	ST	00	1	00002A				
002A	0074	OUT	00	1	00002C				
002C	079E	ST	00	1	00002E				
002E	A804	B	00	1	000034				
0034	8000	LRI	01	1	000036	0000			
0036	9809	BCL	01	1	000038	0000			
0038	8100	LRI	01	1	00003A	000000			
003A	980D	BCL	01	1	00003C	000000			
003C	D100	ORI	01	1	00003E	000000			
003E	9100	ARI	01	1	000040	000000			
0040	F1FF	TRM	01	1	000042	000000			
0042	9815	BCL	01	1	000044	000000			
0044	D1FF	ORI	10	1	000046	0000FF			
0046	91FF	ARI	00	1	000048	0001FE			
0048	F101	TRM	01	1	00004A	0001FE			
004A	981D	BCL	01	1	00004C	0001FE			
004C	F001	TRM	10	1	00004E	0001FE			
004E	8821	BZL	10	1	000050	0001FE			
0050	D3FF	ORI	10	1	000052	00FFFE			
0052	90FF	ARI	10	1	000054	0XFEFE			
0054	9802	BCL	10	1	000058	0XFEFE			

DATE OCT80
E.C. 344270

INST ADDR	MACH CODE	INST MNEM	CZ LL	P L	REG0 (IAR)	REG1	REG3	REG5	REG7	
0058	8000	LRI	01	1	00005A	0X00FE				054
005A	D000	ORI	01	1	00005C	0X00FE				055
005C	9000	ARI	01	1	00005E	0X00FE				056
005E	F0FF	TRM	01	1	000060	0X00FE				057
0060	9833	BCL	01	1	000062	0X00FE				058
0062	77C8	XR	01	1	000064	0X00FE			000000	059
0064	7157	LH	10	1	000066	00FFFF			000000	060
0066	051C	IN	10	1	000068	00FFFF		00FFFF	000000	061
0068	0134	OUT	10	1	00006A	00FFFF	00FFFF	00FFFF	000000	062
006A	53C8	XR	01	1	00006C	00FFFF	000000	00FFFF	000000	063
006C	983F	BCL	01	1	00006E	00FFFF	000000	00FFFF	000000	064
006E	73C8	XR	01	1	000070	00FFFF	000000	00FFFF	000000	065
0070	9843	BCL	01	1	000072	00FFFF	000000	00FFFF	000000	066
0072	17C8	XR	10	1	000074	00FFFF	000000	00FFFF	00FFFF	067
0074	0354	OUT	10	1	000076	00FFFF	000000	000000	00FFFF	068
0076	013C	IN	10	1	000078	000000	000000	000000	00FFFF	069
0078	15C8	XR	01	1	00007A	000000	000000	000000	00FFFF	070
007A	984D	BCL	01	1	00007C	000000	000000	000000	00FFFF	071
007C	8007	LRI	10	1	00007E	000700	000000	000000	00FFFF	072
007E	1785	STH	10	1	000080	000700	000000	000000	00FFFF	073
0080	1305	LH	10	1	000082	000700	00FFFF	000000	00FFFF	074
0082	73C8	XR	01	1	000084	000700	000000	000000	00FFFF	075
0084	9857	BCL	01	1	000086	000700	000000	000000	00FFFF	077
0086	1585	STH	01	1	000088	000700	000000	000000	00FFFF	078
0088	1305	LH	01	1	00008A	000700	000000	000000	00FFFF	079
008A	53C8	XR	01	1	00008C	000700	000000	000000	00FFFF	080
008C	985F	BCL	01	1	00008E	000700	000000	000000	00FFFF	081
008E	1786	ST	01	1	000090	000700	000000	000000	00FFFF	082
0090	1305	LH	01	1	000092	000700	000000	000000	00FFFF	083
0092	53C8	XR	01	1	000094	000700	000000	000000	00FFFF	084
0094	9867	BCL	01	1	000096	000700	000000	000000	00FFFF	085
0096	1507	LH	10	1	000098	000700	000000	00FFFF	00FFFF	086
0098	75C8	XR	01	1	00009A	000700	000000	000000	00FFFF	087
009A	986D	BCL	01	1	00009C	000700	000000	000000	00FFFF	088
009C	1586	ST	01	1	00009E	000700	000000	000000	00FFFF	089
009E	0707	LH	01	1	0000A0	000700	000000	000000	000000	090
00A0	75C8	XR	01	1	0000A2	000700	000000	000000	000000	091
00A2	9875	BCL	01	1	0000A4	000700	000000	000000	000000	092
00A4	80CE	LRI	10	1	0000A6	00CE00	000000	000000	000000	093
00A6	8106	LRI	10	1	0000A8	00CE06	000000	000000	000000	094
00A8	83B4	LRI	10	1	0000AA	00CE06	0000B4	000000	000000	095
00AA	A806	B	10	1	0000B2	00CE06	0000B4	000000	000000	096
00B2	3181	STH	10	1	0000B4	00CE06	0000B4	000000	000000	097
00B4	CE06	BB	10	1	0000B6	00CE06	0000B4	000000	000000	098
00B6	F6FF	TRM	01	1	0000B8	00CE06	0000B4	000000	000000	099
00B8	9802	BCL	01	1	0000BA	00CE06	0000B4	000000	000000	100
00BA	8811	BZL	01	1	0000AC	00CE06	0000B4	000000	000000	101
00AC	9180	ARI	00	1	0000AE	00CE86	0000B4	000000	000000	102
00AE	98AF	BCL	00	1	0000B0	00CE86	0000B4	000000	000000	103
00B0	D00E	ORI	10	1	0000B2	00CE86	0000B4	000000	000000	104
00B2	3181	STH	10	1	0000B4	00CE86	0000B4	000000	000000	105
00B4	CE86	BB	10	1	0000B6	00CE86	0000B4	000000	000000	106
00B6	F6FF	TRM	01	1	0000B8	00CE86	0000B4	000000	000000	107

DATE MAR72
E.C. 309538

INST ADDR	MACH CODE	INST MNEM	CZ LL	P L	REG0 (IAR)	REG1	REG3	REG5	REG7	
00B8	9802	BCL	01	1	0000BA	00CE86	0000B4	000000	000000	108
00BA	8811	BZL	01	1	0000AC	00CE86	0000B4	000000	000000	109
00AC	9180	ARI	00	1	0000AE	00CF06	0000B4	000000	000000	110
00AE	98AF	BCL	00	1	0000B0	00CF06	0000B4	000000	000000	111
00B0	D00E	ORI	10	1	0000B2	00CF06	0000B4	000000	000000	112
00B2	3181	STH	10	1	0000B4	00CF06	0000B4	000000	000000	113
00B4	CF06	BB	10	1	0000B6	00CF06	0000B4	000000	000000	114
00B6	F6FF	TRM	01	1	0000B8	00CF06	0000B4	000000	000000	115
00B8	9802	BCL	01	1	0000BA	00CF06	0000B4	000000	000000	116
00BA	8811	BZL	01	1	0000AC	00CF06	0000B4	000000	000000	117
00AC	9180	ARI	00	1	0000AE	00CF86	0000B4	000000	000000	118
00AE	98AF	BCL	00	1	0000B0	00CF86	0000B4	000000	000000	119
00B0	D00E	ORI	10	1	0000B2	00CF86	0000B4	000000	000000	120
00B2	3181	STH	10	1	0000B4	00CF86	0000B4	000000	000000	121
00B4	CF86	BB	10	1	0000B6	00CF86	0000B4	000000	000000	122
00B6	F6FF	TRM	01	1	0000B8	00CF86	0000B4	000000	000000	123
00B8	9802	BCL	01	1	0000BA	00CF86	0000B4	000000	000000	124
00BA	8811	BZL	01	1	0000AC	00CF86	0000B4	000000	000000	125
00AC	9180	ARI	00	1	0000AE	00D006	0000B4	000000	000000	126
00AE	98AF	BCL	00	1	0000B0	00D006	0000B4	000000	000000	127
00B0	D00E	ORI	10	1	0000B2	00DE06	0000B4	000000	000000	128
00B2	3181	STH	10	1	0000B4	00DE06	0000B4	000000	000000	129
00B4	DE06	BB	10	1	0000B6	00DE06	0000B4	000000	000000	130
00B6	F6FF	TRM	01	1	0000B8	00DE06	0000B4	000000	000000	131
00B8	9802	BCL	01	1	0000BA	00DE06	0000B4	000000	000000	132
00BA	8811	BZL	01	1	0000AC	00DE06	0000B4	000000	000000	133
00AC	9180	ARI	00	1	0000AE	00DE86	0000B4	000000	000000	134
00AE	98AF	BCL	00	1	0000B0	00DE86	0000B4	000000	000000	135
00B0	D00E	ORI	10	1	0000B2	00DE86	0000B4	000000	000000	136
00B2	3181	STH	10	1	0000B4	00DE86	0000B4	000000	000000	137
00B4	DE86	BB	10	1	0000B6	00DE86	0000B4	000000	000000	138
00B6	F6FF	TRM	01	1	0000B8	00DE86	0000B4	000000	000000	139
00B8	9802	BCL	01	1	0000BA	00DE86	0000B4	000000	000000	140
00BA	8811	BZL	01	1	0000AC	00DE86	0000B4	000000	000000	141
00AC	9180	ARI	00	1	0000AE	00DF06	0000B4	000000	000000	142
00AE	98AF	BCL	00	1	0000B0	00DF06	0000B4	000000	000000	143
00B0	D00E	ORI	10	1	0000B2	00DF06	0000B4	000000	000000	144
00B2	3181	STH	10	1	0000B4	00DF06	0000B4	000000	000000	145
00B4	DF06	BB	10	1	0000B6	00DF06	0000B4	000000	000000	146
00B6	F6FF	TRM	01	1	0000B8	00DF06	0000B4	000000	000000	147
00B8	9802	BCL	01	1	0000BA	00DF06	0000B4	000000	000000	148
00BA	8811	BZL	01	1	0000AC	00DF06	0000B4	000000	000000	149
00AC	9180	ARI	00	1	0000AE	00DF86	0000B4	000000	000000	150
00AE	98AF	BCL	00	1	0000B0	00DF86	0000B4	000000	000000	151
00B0	D00E	ORI	10	1	0000B2	00DF86	0000B4	000000	000000	152
00B2	3181	STH	10	1	0000B4	00DF86	0000B4	000000	000000	153
00B4	DF86	BB	10	1	0000B6	00DF86	0000B4	000000	000000	154
00B6	F6FF	TRM	01	1	0000B8	00DF86	0000B4	000000	000000	155
00B8	9802	BCL	01	1	0000BA	00DF86	0000B4	000000	000000	156
00BA	8811	BZL	01	1	0000AC	00DF86	0000B4	000000	000000	157
00AC	9180	ARI	00	1	0000AE	00E006	0000B4	000000	000000	158
00AE	98AF	BCL	00	1	0000B0	00E006	0000B4	000000	000000	159
00B0	D00E	ORI	10	1	0000B2	00EE06	0000B4	000000	000000	160

DATE MAR72
E.C. 309538

P/N 1785367 LOGIC: CW304

INST ADDR	MACH CODE	INST MNEM	CZ LL	P L	REG0 (IAR)	REG1	REG3	REG5	REG7	
00B2	3181	STH	10	1	0000B4	00EE06	0000B4	000000	000000	161
00B4	EE06	BB	10	1	0000B6	00EE06	0000B4	000000	000000	162
00B6	F6FF	TRM	01	1	0000B8	00EE06	0000B4	000000	000000	163
00B8	9802	BCL	01	1	0000BA	00EE06	0000B4	000000	000000	164
00BA	8811	BZL	01	1	0000AC	00EE06	0000B4	000000	000000	165
00AC	9180	ARI	00	1	0000AE	00EE86	0000B4	000000	000000	166
00AE	98AF	BCL	00	1	0000B0	00EE86	0000B4	000000	000000	167
00B0	D00E	ORI	10	1	0000B2	00EE86	0000B4	000000	000000	168
00B2	3181	STH	10	1	0000B4	00EE86	0000B4	000000	000000	169
00B4	EE86	BB	10	1	0000B6	00EE86	0000B4	000000	000000	170
00B6	F6FF	TRM	01	1	0000B8	00EE86	0000B4	000000	000000	171
00B8	9802	BCL	01	1	0000BA	00EE86	0000B4	000000	000000	172
00BA	8811	BZL	01	1	0000AC	00EE86	0000B4	000000	000000	173
00AC	9180	ARI	00	1	0000AE	00EF06	0000B4	000000	000000	174
00AE	98AF	BCL	00	1	0000B0	00EF06	0000B4	000000	000000	175
00B0	D00E	ORI	10	1	0000B2	00EF06	0000B4	000000	000000	176
00B2	3181	STH	10	1	0000B4	00EF06	0000B4	000000	000000	177
00B4	EF06	BB	10	1	0000B6	00EF06	0000B4	000000	000000	178
00B6	F6FF	TRM	01	1	0000B8	00EF06	0000B4	000000	000000	179
00B8	9802	BCL	01	1	0000BA	00EF06	0000B4	000000	000000	180
00BA	8811	BZL	01	1	0000AC	00EF06	0000B4	000000	000000	181
00AC	9180	ARI	00	1	0000AE	00EF86	0000B4	000000	000000	182
00AE	98AF	BCL	00	1	0000B0	00EF86	0000B4	000000	000000	183
00B0	D00E	ORI	10	1	0000B2	00EF86	0000B4	000000	000000	184
00B2	3181	STH	10	1	0000B4	00EF86	0000B4	000000	000000	185
00B4	EF86	BB	10	1	0000B6	00EF86	0000B4	000000	000000	186
00B6	F6FF	TRM	01	1	0000B8	00EF86	0000B4	000000	000000	188
00B8	9802	BCL	01	1	0000BA	00EF86	0000B4	000000	000000	189
00BA	8811	BZL	01	1	0000AC	00EF86	0000B4	000000	000000	190
00AC	9180	ARI	00	1	0000AE	00F006	0000B4	000000	000000	191
00AE	98AF	BCL	00	1	0000B0	00F006	0000B4	000000	000000	192
00B0	D00E	ORI	10	1	0000B2	00FE06	0000B4	000000	000000	193
00B2	3181	STH	10	1	0000B4	00FE06	0000B4	000000	000000	194
00B4	FE06	BB	10	1	0000B6	00FE06	0000B4	00000C	000000	195
00B6	F6FF	TRM	01	1	0000B8	00FE06	0000B4	000000	000000	196
00B8	9802	BCL	01	1	0000BA	00FE06	0000B4	000000	000000	197
00BA	8811	BZL	01	1	0000AC	00FE06	0000B4	000000	000000	198
00AC	9180	ARI	00	1	0000AE	00FE86	0000B4	000000	000000	199
00AE	98AF	BCL	00	1	0000B0	00FE86	0000B4	000000	000000	200
00B0	D00E	ORI	10	1	0000B2	00FE86	0000B4	000000	000000	201
00B2	3181	STH	10	1	0000B4	00FE86	0000B4	000000	000000	202
00B4	FE86	BB	10	1	0000B6	00FE86	0000B4	000000	000000	203
00B6	F6FF	TRM	01	1	0000B8	00FE86	0000B4	000000	000000	204
00B8	9802	BCL	01	1	0000BA	00FE86	0000B4	000000	000000	205
00BA	8811	BZL	01	1	0000AC	00FE86	0000B4	000000	000000	206
00AC	9180	ARI	00	1	0000AE	00FF06	0000B4	000000	000000	207
00AE	98AF	BCL	00	1	0000B0	00FF06	0000B4	000000	000000	208
00B0	D00E	ORI	10	1	0000B2	00FF06	0000B4	000000	000000	209
00B2	3181	STH	10	1	0000B4	00FF06	0000B4	000000	000000	210
00B4	FF06	BB	10	1	0000B6	00FF06	0000B4	000000	000000	211
00B6	F6FF	TRM	01	1	0000B8	00FF06	0000B4	000000	000000	212
00B8	9802	BCL	01	1	0000BA	00FF06	0000B4	000000	000000	213
00BA	8811	BZL	01	1	0000AC	00FF06	0000B4	000000	000000	214

DATE MAR72
E.C. 309538

INST ADDR	MACH CODE	INST MNEM	CZ LL	P L	REG0 (IAR)	REG1	REG3	REG5	REG7	
00AC	9180	ARI	00	1	0000AE	00FF86	0000B4	000000	000000	215
00AE	98AF	BCL	00	1	0000B0	00FF86	0000B4	000000	000000	216
00B0	D00E	ORI	10	1	0000B2	00FF86	0000B4	000000	000000	217
00B2	3181	STH	10	1	0000B4	00FF86	0000B4	000000	000000	218
00B4	FF86	BB	10	1	0000B6	00FF86	0000B4	000000	000000	219
00B6	F6FF	TRM	01	1	0000B8	00FF86	0000B4	000000	000000	220
00B8	9802	BCL	01	1	0000BA	00FF86	0000B4	000000	000000	221
00BA	8811	BZL	01	1	0000AC	00FF86	0000B4	000000	000000	222
00AC	9180	ARI	10	1	0000AE	0X0006	0000B4	000000	000000	223
00AE	98AF	BCL	10	1	000002	0X0006	0000B4	000000	000000	224
0002	F6FF	TRM	01	1	000004	0X0006	0000B4	000000	000000	225
0004	98B8	BCL	01	1	000006	0X0006	0000B4	000000	000000	226
0006	80CE	LRI	10	1	000008	0XCE06	0000B4	000000	000000	227
0008	810B	LRI	10	1	00000A	0XCE0B	0000B4	000000	000000	228
000A	86FF	LRI	10	1	00000C	0XCE0B	0000B4	000000	00FF00	229
000C	87FF	LRI	10	1	00000E	0XCE0B	0000B4	000000	00FFFF	230
000E	A8A2	B	10	1	0000B2	0XCE0B	0000B4	000000	00FFFF	231
00B2	3181	STH	10	1	0000B4	0XCE0B	0000B4	000000	00FFFF	232
00B4	CE0B	BB	10	1	0000AC	0XCE0B	0000B4	000000	00FFFF	233
00AC	9180	ARI	00	1	0000AE	0XCE8B	0000B4	000000	00FFFF	234
00AE	98AF	BCL	00	1	0000B0	0XCE8B	0000B4	000000	00FFFF	235
00B0	D00E	ORI	10	1	0000B2	0XCE8B	0000B4	000000	00FFFF	236
00B2	3181	STH	10	1	0000B4	0XCE8B	0000B4	000000	00FFFF	237
00B4	CE8B	BB	10	1	0000AC	0XCE8B	0000B4	000000	00FFFF	238
00AC	9180	ARI	00	1	0000AE	0XCF0B	0000B4	000000	00FFFF	239
00AE	98AF	BCL	00	1	0000B0	0XCF0B	0000B4	000000	00FFFF	240
00B0	D00E	ORI	10	1	0000B2	0XCF0B	0000B4	000000	00FFFF	241
00B2	3181	STH	10	1	0000B4	0XCF0B	0000B4	000000	00FFFF	242
00B4	CF0B	BB	10	1	0000AC	0XCF0B	0000B4	000000	00FFFF	244
00AC	9180	ARI	00	1	0000AE	0XCF8B	0000B4	000000	00FFFF	245
00AE	98AF	BCL	00	1	0000B0	0XCF8B	0000B4	000000	00FFFF	246
00B0	D00E	ORI	10	1	0000B2	0XCF8B	0000B4	000000	00FFFF	247
00B2	3181	STH	10	1	0000B4	0XCF8B	0000B4	000000	00FFFF	248
00B4	CF8B	BB	10	1	0000AC	0XCF8B	0000B4	000000	00FFFF	249
00AC	9180	ARI	00	1	0000AE	0XD00B	0000B4	000000	00FFFF	250
00AE	98AF	BCL	00	1	0000B0	0XD00B	0000B4	000000	00FFFF	251
00B0	D00E	ORI	10	1	0000B2	0XDE0B	0000B4	000000	00FFFF	252
00B2	3181	STH	10	1	0000B4	0XDE0B	0000B4	000000	00FFFF	253
00B4	DE0B	BB	10	1	0000AC	0XDE0B	0000B4	000000	00FFFF	254
00AC	9180	ARI	00	1	0000AE	0XDE8B	0000B4	000000	00FFFF	255
00AE	98AF	BCL	00	1	0000B0	0XDE8B	0000B4	000000	00FFFF	256
00B0	D00E	ORI	10	1	0000B2	0XDE8B	0000B4	000000	00FFFF	257
00B2	3181	STH	10	1	0000B4	0XDE8B	0000B4	000000	00FFFF	258
00B4	DE8B	BB	10	1	0000AC	0XDE8B	0000B4	000000	00FFFF	259
00AC	9180	ARI	00	1	0000AE	0XDF0B	0000B4	000000	00FFFF	260
00AE	98AF	BCL	00	1	0000B0	0XDF0B	0000B4	000000	00FFFF	261
00B0	D00E	ORI	10	1	0000B2	0XDF0B	0000B4	000000	00FFFF	262
00B2	3181	STH	10	1	0000B4	0XDF0B	0000B4	000000	00FFFF	263
00B4	DF0B	BB	10	1	0000AC	0XDF0B	0000B4	000000	00FFFF	264
00AC	9180	ARI	00	1	0000AE	0XDF8B	0000B4	000000	00FFFF	265
00AE	98AF	BCL	00	1	0000B0	0XDF8B	0000B4	000000	00FFFF	266
00B0	D00E	ORI	10	1	0000B2	0XDF8B	0000B4	000000	00FFFF	268
00B2	3181	STH	10	1	0000B4	0XDF8B	0000B4	000000	00FFFF	269

DATE MAR72
E.C. 309538

INST ADDR	MACH CODE	INST MNEM	CZ LL	P L	REG0 (IAR)	REG1	REG3	REG5	REG7	
00B4	DF8B	BB	10	1	0000AC	0XDF8B	0000B4	000000	00FFFF	270
00AC	9180	ARI	00	1	0000AE	0XE00B	0000B4	000000	00FFFF	271
00AE	98AF	BCL	00	1	0000B0	0XE00B	0000B4	000000	00FFFF	272
00B0	D00E	ORI	10	1	0000B2	0XEE0B	0000B4	000000	00FFFF	273
00B2	3181	STH	10	1	0000B4	0XEE0B	0000B4	000000	00FFFF	274
00B4	EE0B	BB	10	1	0000AC	0XEE0B	0000B4	000000	00FFFF	275
00AC	9180	ARI	00	1	0000AE	0XEE8B	0000B4	000000	00FFFF	276
00AE	98AF	BCL	00	1	0000B0	0XEE8B	0000B4	000000	00FFFF	277
00B0	D00E	ORI	10	1	0000B2	0XEE8B	0000B4	000000	00FFFF	278
00B2	3181	STH	10	1	0000B4	0XEE8B	0000B4	000000	00FFFF	279
00B4	EE8B	BB	10	1	0000AC	0XEE8B	0000B4	000000	00FFFF	280
00AC	9180	ARI	00	1	0000AE	0XEF0B	0000B4	000000	00FFFF	281
00AE	98AF	BCL	00	1	0000B0	0XEF0B	0000B4	000000	00FFFF	282
00B0	D00E	ORI	10	1	0000B2	0XEF0B	0000B4	000000	00FFFF	283
00B2	3181	STH	10	1	0000B4	0XEF0B	0000B4	000000	00FFFF	284
00B4	EF0B	BB	10	1	0000AC	0XEF0B	0000B4	000000	00FFFF	285
00AC	9180	ARI	00	1	0000AE	0XEF8B	0000B4	000000	00FFFF	286
00AE	98AF	BCL	00	1	0000B0	0XEF8B	0000B4	000000	00FFFF	287
00B0	D00E	ORI	10	1	0000B2	0XEF8B	0000B4	000000	00FFFF	288
00B2	3181	STH	10	1	0000B4	0XEF8B	0000B4	000000	00FFFF	289
00B4	EF8B	BB	10	1	0000AC	0XEF8B	0000B4	000000	00FFFF	290
00AC	9180	ARI	00	1	0000AE	0XF00B	0000B4	000000	00FFFF	291
00AE	98AF	BCL	00	1	0000B0	0XF00B	0000B4	000000	00FFFF	292
00B0	D00E	ORI	10	1	0000B2	0XFE0B	0000B4	000000	00FFFF	293
00B2	3181	STH	10	1	0000B4	0XFE0B	0000B4	000000	00FFFF	294
00B4	FE0B	BB	10	1	0000AC	0XFE0B	0000B4	000000	00FFFF	295
00AC	9180	ARI	00	1	0000AE	0XFE8B	0000B4	000000	00FFFF	296
00AE	98AF	BCL	00	1	0000B0	0XFE8B	0000B4	000000	00FFFF	297
00B0	D00E	ORI	10	1	0000B2	0XFE8B	0000B4	000000	00FFFF	298
00B2	3181	STH	10	1	0000B4	0XFE8B	0000B4	000000	00FFFF	299
00B4	FE8B	BB	10	1	0000AC	0XFE8B	0000B4	000000	00FFFF	301
00AC	9180	ARI	00	1	0000AE	0XFF0B	0000B4	000000	00FFFF	302
00AE	98AF	BCL	00	1	0000B0	0XFF0B	0000B4	000000	00FFFF	303
00B0	D00E	ORI	10	1	0000B2	0XFF0B	0000B4	000000	00FFFF	304
00B2	3181	STH	10	1	0000B4	0XFF0B	0000B4	000000	00FFFF	305
00B4	FF0B	BB	10	1	0000AC	0XFF0B	0000B4	000000	00FFFF	306
00AC	9180	ARI	00	1	0000AE	0XFF8B	0000B4	000000	00FFFF	307
00AE	98AF	BCL	00	1	0000B0	0XFF8B	0000B4	000000	00FFFF	308
00B0	D00E	ORI	10	1	0000B2	0XFF8B	0000B4	000000	00FFFF	309
00B2	3181	STH	10	1	0000B4	0XFF8B	0000B4	000000	00FFFF	310
00B4	FF8B	BB	10	1	0000AC	0XFF8B	0000B4	000000	00FFFF	311
00AC	9180	ARI	10	1	0000AE	0Y000B	0000B4	000000	00FFFF	312
00AE	98AF	BCL	10	1	000002	0Y000B	0000B4	000000	00FFFF	313
0002	F6FF	TRM	10	1	000004	0Y000B	0000B4	000000	00FFFF	314
0004	98B8	BCL	10	1	0000BE	0Y000B	0000B4	000000	00FFFF	315
00BE	8174	LRI	10	1	0000C0	0Y0074	0000B4	000000	00FFFF	316
00C0	83C8	LRI	10	1	0000C2	0Y0074	0000C8	000000	00FFFF	317
00C2	9110	ARI	00	1	0000C4	0Y0084	0000C8	000000	00FFFF	318
00C4	F886	BB	00	1	0000C6	0Y0084	0000C8	000000	00FFFF	319
00C6	3181	STH	00	1	0000C8	0Y0084	0000C8	000000	00FFFF	320
00C8	0084	OUT	00	1	0000CA	0Y0084	0000C8	000000	00FFFF	321
00CA	A80B	B	00	1	0000C2	0Y0084	0000C8	000000	00FFFF	322
00C2	9110	ARI	00	1	0000C4	0Y0094	0000C8	000000	00FFFF	323

DATE MAR72

E.C. 309538

INST ADDR	MACH CODE	INST MNEM	CZ LL	P L	REG0 (IAR)	REG1	REG3	REG5	REG7	
00C4	F886	BB	00	1	0000C6	0Y0094	0000C8	000000	00FFFF	324
00C6	3181	STH	00	1	0000C8	0Y0094	0000C8	000000	00FFFF	325
00C8	0094	OUT	00	1	0000CA	0Y0094	0000C8	000000	00FFFF	326
00CA	A80B	B	00	1	0000C2	0Y0094	0000C8	000000	00FFFF	327
00C2	9110	ARI	00	1	0000C4	0Y00A4	0000C8	000000	00FFFF	328
00C4	F886	BB	00	1	0000C6	0Y00A4	0000C8	000000	00FFFF	329
00C6	3181	STH	00	1	0000C8	0Y00A4	0000C8	000000	00FFFF	330
00C8	00A4	OUT	00	1	0000CA	0Y00A4	0000C8	000000	00FFFF	331
00CA	A80B	B	00	1	0000C2	0Y00A4	0000C8	000000	00FFFF	332
00C2	9110	ARI	00	1	0000C4	0Y00B4	0000C8	000000	00FFFF	333
00C4	F886	BB	00	1	0000C6	0Y00B4	0000C8	000000	00FFFF	334
00C6	3181	STH	00	1	0000C8	0Y00B4	0000C8	000000	00FFFF	335
00C8	00B4	OUT	00	1	0000CA	0Y00B4	0000C8	000000	00FFFF	336
00CA	A80B	B	00	1	0000C2	0Y00B4	0000C8	000000	00FFFF	337
00C2	9110	ARI	00	1	0000C4	0Y00C4	0000C8	000000	00FFFF	338
00C4	F886	BB	00	1	0000C6	0Y00C4	0000C8	000000	00FFFF	339
00C6	3181	STH	00	1	0000C8	0Y00C4	0000C8	000000	00FFFF	340
00C8	00C4	OUT	00	1	0000CA	0Y00C4	0000C8	000000	00FFFF	341
00CA	A80B	B	00	1	0000C2	0Y00C4	0000C8	000000	00FFFF	342
00C2	9110	ARI	00	1	0000C4	0Y00D4	0000C8	000000	00FFFF	343
00C4	F886	BB	00	1	0000C6	0Y00D4	0000C8	000000	00FFFF	344
00C6	3181	STH	00	1	0000C8	0Y00D4	0000C8	000000	00FFFF	345
00C8	00D4	OUT	00	1	0000CA	0Y00D4	0000C8	000000	00FFFF	346
00CA	A80B	B	00	1	0000C2	0Y00D4	0000C8	000000	00FFFF	347
00C2	9110	ARI	00	1	0000C4	0Y00E4	0000C8	000000	00FFFF	348
00C4	F886	BB	00	1	0000C6	0Y00E4	0000C8	000000	00FFFF	349
00C6	3181	STH	00	1	0000C8	0Y00E4	0000C8	000000	00FFFF	350
00C8	00E4	OUT	00	1	0000CA	0Y00E4	0000C8	000000	00FFFF	351
00CA	A80B	B	00	1	0000C2	0Y00E4	0000C8	000000	00FFFF	352
00C2	9110	ARI	00	1	0000C4	0Y00F4	0000C8	000000	00FFFF	353
00C4	F886	BB	00	1	0000C6	0Y00F4	0000C8	000000	00FFFF	354
00C6	3181	STH	00	1	0000C8	0Y00F4	0000C8	000000	00FFFF	355
00C8	00F4	OUT	00	1	0000CA	0Y00F4	0000C8	000000	00FFFF	357
00CA	A80B	B	00	1	0000C2	0Y00F4	0000C8	000000	00FFFF	358
00C2	9110	ARI	00	1	0000C4	0Y0104	0000C8	000000	00FFFF	359
00C4	F886	BB	00	1	0000CC	0Y0104	0000C8	000000	00FFFF	360
00CC	D884	BB	00	1	0000CE	0Y0104	0000C8	000000	00FFFF	361
00CE	8010	LRI	10	1	0000D0	0Y1004	0000C8	000000	00FFFF	362
00D0	A80D	B	10	1	0000C6	0Y1004	0000C8	000000	00FFFF	363
00C6	3181	STH	10	1	0000C8	0Y1004	0000C8	000000	00FFFF	364
00C8	1004	OUT	10	1	0000CA	0Y1004	0000C8	000000	00FFFF	365
00CA	A80B	B	10	1	0000C2	0Y1004	0000C8	000000	00FFFF	366
00C2	9110	ARI	00	1	0000C4	0Y1014	0000C8	000000	00FFFF	367
00C4	F886	BB	00	1	0000C6	0Y1014	0000C8	000000	00FFFF	368
00C6	3181	STH	00	1	0000C8	0Y1014	0000C8	000000	00FFFF	369
00C8	1014	OUT	00	1	0000CA	0Y1014	0000C8	000000	00FFFF	370
00CA	A80B	B	00	1	0000C2	0Y1014	0000C8	000000	00FFFF	371
00C2	9110	ARI	00	1	0000C4	0Y1024	0000C8	000000	00FFFF	372
00C4	F886	BB	00	1	0000C6	0Y1024	0000C8	000000	00FFFF	373
00C6	3181	STH	00	1	0000C8	0Y1024	0000C8	000000	00FFFF	374
00C8	1024	OUT	00	1	0000CA	0Y1024	0000C8	000000	00FFFF	375
00CA	A80B	B	00	1	0000C2	0Y1024	0000C8	000000	00FFFF	376
00C2	9110	ARI	00	1	0000C4	0Y1034	0000C8	000000	00FFFF	377

DATE MAR72

E.C. 309538

INST ADDR	MACH CODE	INST MNEM	CZ LL	P L	REG0 (IAR)	REG1	REG3	REG5	REG7	
00C4	F886	BB	00	1	0000C6	0Y1034	0000C8	000000	00FFFF	378
00C6	3181	STH	00	1	0000C8	0Y1034	0000C8	000000	00FFFF	379
00C8	1034	OUT	00	1	0000CA	0Y1034	0000C8	000000	00FFFF	380
00CA	A80B	B	00	1	0000C2	0Y1034	0000C8	000000	00FFFF	381
00C2	9110	ARI	00	1	0000C4	0Y1044	0000C8	000000	00FFFF	382
00C4	F886	BB	00	1	0000C6	0Y1044	0000C8	000000	00FFFF	383
00C6	3181	STH	00	1	0000C8	0Y1044	0000C8	000000	00FFFF	384
00C8	1044	OUT	00	1	0000CA	0Y1044	0000C8	000000	00FFFF	385
00CA	A80B	B	00	1	0000C2	0Y1044	0000C8	000000	00FFFF	386
00C2	9110	ARI	00	1	0000C4	0Y1054	0000C8	000000	00FFFF	387
00C4	F886	BB	00	1	0000C6	0Y1054	0000C8	000000	00FFFF	388
00C6	3181	STH	00	1	0000C8	0Y1054	0000C8	000000	00FFFF	
00C8	1054	OUT	00	1	0000CA	0Y1054	0000C8	000000	00FFFF	389
00CA	A80B	B	00	1	0000C2	0Y1054	0000C8	000000	00FFFF	390
00C2	9110	ARI	00	1	0000C4	0Y1064	0000C8	000000	00FFFF	400
00C4	F886	BB	00	1	0000C6	0Y1064	0000C8	000000	00FFFF	401
00C6	3181	STH	00	1	0000C8	0Y1064	0000C8	000000	00FFFF	402
00C8	1064	OUT	00	1	0000CA	0Y1064	0000C8	000000	00FFFF	403
00CA	A80B	B	00	1	0000C2	0Y1064	0000C8	000000	00FFFF	404
00C2	9110	ARI	00	1	0000C4	0Y1074	0000C8	000000	00FFFF	405
00C4	F886	BB	00	1	0000C6	0Y1074	0000C8	000000	00FFFF	406
00C6	3181	STH	00	1	0000C8	0Y1074	0000C8	000000	00FFFF	407
00C8	1074	OUT	00	1	0000CA	0Y1074	0000C8	000000	00FFFF	408
00CA	A80B	B	00	1	0000C2	0Y1074	0000C8	000000	00FFFF	409
00C2	9110	ARI	00	1	0000C4	0Y1084	0000C8	000000	00FFFF	410
00C4	F886	BB	00	1	0000C6	0Y1084	0000C8	000000	00FFFF	411
00C6	3181	STH	00	1	0000C8	0Y1084	0000C8	000000	00FFFF	412
00C8	1084	OUT	00	1	0000CA	0Y1084	0000C8	000000	00FFFF	413
00CA	A80B	B	00	1	0000C2	0Y1084	0000C8	000000	00FFFF	414
00C2	9110	ARI	00	1	0000C4	0Y1094	0000C8	000000	00FFFF	415
00C4	F886	BB	00	1	0000C6	0Y1094	0000C8	000000	00FFFF	416
00C6	3181	STH	00	1	0000C8	0Y1094	0000C8	000000	00FFFF	417
00C8	1094	OUT	00	1	0000CA	0Y1094	0000C8	000000	00FFFF	418
00CA	A80B	B	00	1	0000C2	0Y1094	0000C8	000000	00FFFF	419
00C2	9110	ARI	00	1	0000C4	0Y10A4	0000C8	000000	00FFFF	421
00C4	F886	BB	00	1	0000C6	0Y10A4	0000C8	000000	00FFFF	422
00C6	3181	STH	00	1	0000C8	0Y10A4	0000C8	000000	00FFFF	423
00C8	10A4	OUT	00	1	0000CA	0Y10A4	0000C8	000000	00FFFF	424
00CA	A80B	B	00	1	0000C2	0Y10A4	0000C8	000000	00FFFF	425
00C2	9110	ARI	00	1	0000C4	0Y10B4	0000C8	000000	00FFFF	426
00C4	F886	BB	00	1	0000C6	0Y10B4	0000C8	000000	00FFFF	427
00C6	3181	STH	00	1	0000C8	0Y10B4	0000C8	000000	00FFFF	428
00C8	10B4	OUT	00	1	0000CA	0Y10B4	0000C8	000000	00FFFF	429
00CA	A80B	B	00	1	0000C2	0Y10B4	0000C8	000000	00FFFF	430
00C2	9110	ARI	00	1	0000C4	0Y10C4	0000C8	000000	00FFFF	431
00C4	F886	BB	00	1	0000C6	0Y10C4	0000C8	000000	00FFFF	432
00C6	3181	STH	00	1	0000C8	0Y10C4	0000C8	000000	00FFFF	433
00C8	10C4	OUT	00	1	0000CA	0Y10C4	0000C8	000000	00FFFF	434
00CA	A80B	B	00	1	0000C2	0Y10C4	0000C8	000000	00FFFF	435
00C2	9110	ARI	00	1	0000C4	0Y10D4	0000C8	000000	00FFFF	436
00C4	F886	BB	00	1	0000C6	0Y10D4	0000C8	000000	00FFFF	437
00C6	3181	STH	00	1	0000C8	0Y10D4	0000C8	000000	00FFFF	438
00C8	10D4	OUT	00	1	0000CA	0Y10D4	0000C8	000000	00FFFF	439

DATE MAR72
E.C. 309538

```
INST  MACH  INST  CZ P REG0    REG1    REG3    REG5    REG7
ADDR  CODE  MNEM  LL L (IAR)
-------------------------------------------------------------
00CA  A80B  B     00 1 0000C2  0Y10D4  0000C8  000000  00FFFF   440
00C2  9110  ARI   00 1 0000C4  0Y10E4  0000C8  000000  00FFFF   441
00C4  F886  BB    00 1 0000C6  0Y10E4  0000C8  000000  00FFFF   442
00C6  3181  STH   00 1 0000C8  0Y10E4  0000C8  000000  00FFFF   443
00C8  10E4  OUT   00 1 0000CA  0Y10E4  0000C8  000000  00FFFF   444
00CA  A80B  B     00 1 0000C2  0Y10E4  0000C8  000000  00FFFF   445
00C2  9110  ARI   00 1 0000C4  0Y10F4  0000C8  000000  00FFFF   446
00C4  F886  BB    00 1 0000C6  0Y10F4  0000C8  000000  00FFFF   447
00C6  3181  STH   00 1 0000C8  0Y10F4  0000C8  000000  00FFFF   448
00C8  10F4  OUT   00 1 0000CA  0Y10F4  0000C8  000000  00FFFF   449
00CA  A80B  B     00 1 0000C2  0Y10F4  0000C8  000000  00FFFF   450
00C2  9110  ARI   00 1 0000C4  0Y1104  0000C8  000000  00FFFF   451
00C4  F886  BB    00 1 0000CC  0Y1104  0000C8  000000  00FFFF   452
00CC  D884  BB    00 1 0000D2  0Y1104  0000C8  000000  00FFFF   453
00D2  719C  IN    00 1 0000D4  000000  0000C8  000000  00FFFF   454
00D4  F982  BB    00 1 0000D6  000000  0000C8  000000  00FFFF   455
                                                               456
                                                               457
END OF INSTRUCTION TEST PORTION OF ROS-RETURN TO ROS PROGRAM LISTING   458
FOR THE CHANNEL ADAPTER DATA TRANSFER PORTION.                 459
```

DATE MAR72
E.C. 309538

620-0133-1 MRO= 780522203 VERTICAL ELECTRICAL FORMAT

4499510 B

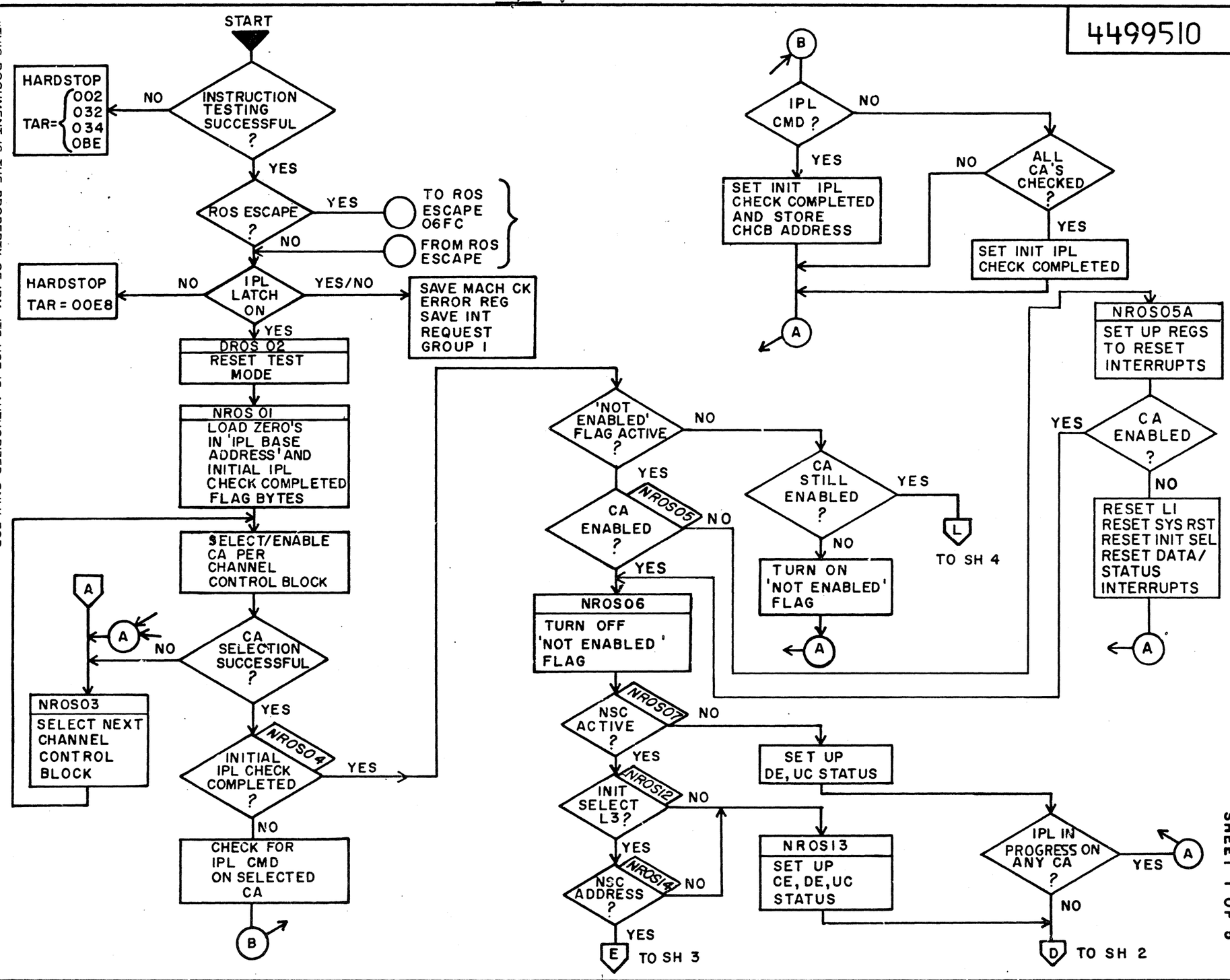

"THIS DOCUMENT IS THE PROPERTY OF IBM. ITS USE IS AUTHORIZED ONLY FOR RESPONDING TO A REQUEST FOR QUOTATION OR FOR THE PERFORMANCE OF WORK FOR IBM. ALL QUESTIONS MUST BE REFERRED TO THE IBM PURCHASING DEPARTMENT."

IBM

NAME	3705-80N CHANNEL	REL	JUN 81
ADAPTER ROS FLOW CHART			344828
DESIGN	DJR	JUN 81	SHT 1 OF 5
DETAIL			
CHECK		CLASSIFICATION	
APPRO		DJR	JUN 81

DATE	CHANGE NO	DATE	CHANGE NO

MUST CONFORM TO ENG SPEC

DEVELOPMENT NO

LOGIC PG NO CW500

B 4499510

PART NO 4499510

LOGIC PG NO CW 500

SHEET 1 OF 5

ASTROCLOTH N6501

620-0133-1 MRO= 780522203 VERTICAL ELECTRICAL FORMAT

4499510 B

"THIS DOCUMENT IS THE PROPERTY OF IBM. ITS USE IS AUTHORIZED ONLY FOR RESPONDING TO A REQUEST FOR QUOTATION OR FOR THE PERFORMANCE OF WORK FOR IBM. ALL QUESTIONS MUST BE REFERRED TO THE IBM PURCHASING DEPARTMENT."

IBM

	NAME	DATE	CLASSIFICATION
APPRO			
CHECK			
DETAIL			
DESIGN	DJR	JUN 81	DJR JUN 81

ROS FLOW CHART — 3705-80 N CHANNEL ADAPTER — SHT 2 OF 5

	REL	DATE
MUST CONFORM TO ENG SPEC		
CHANGE NO	344828	JUN 81
DEVELOPMENT NO		
DATE		
CHANGE NO		
LOGIC PG NO		
CW500		

4499510 B

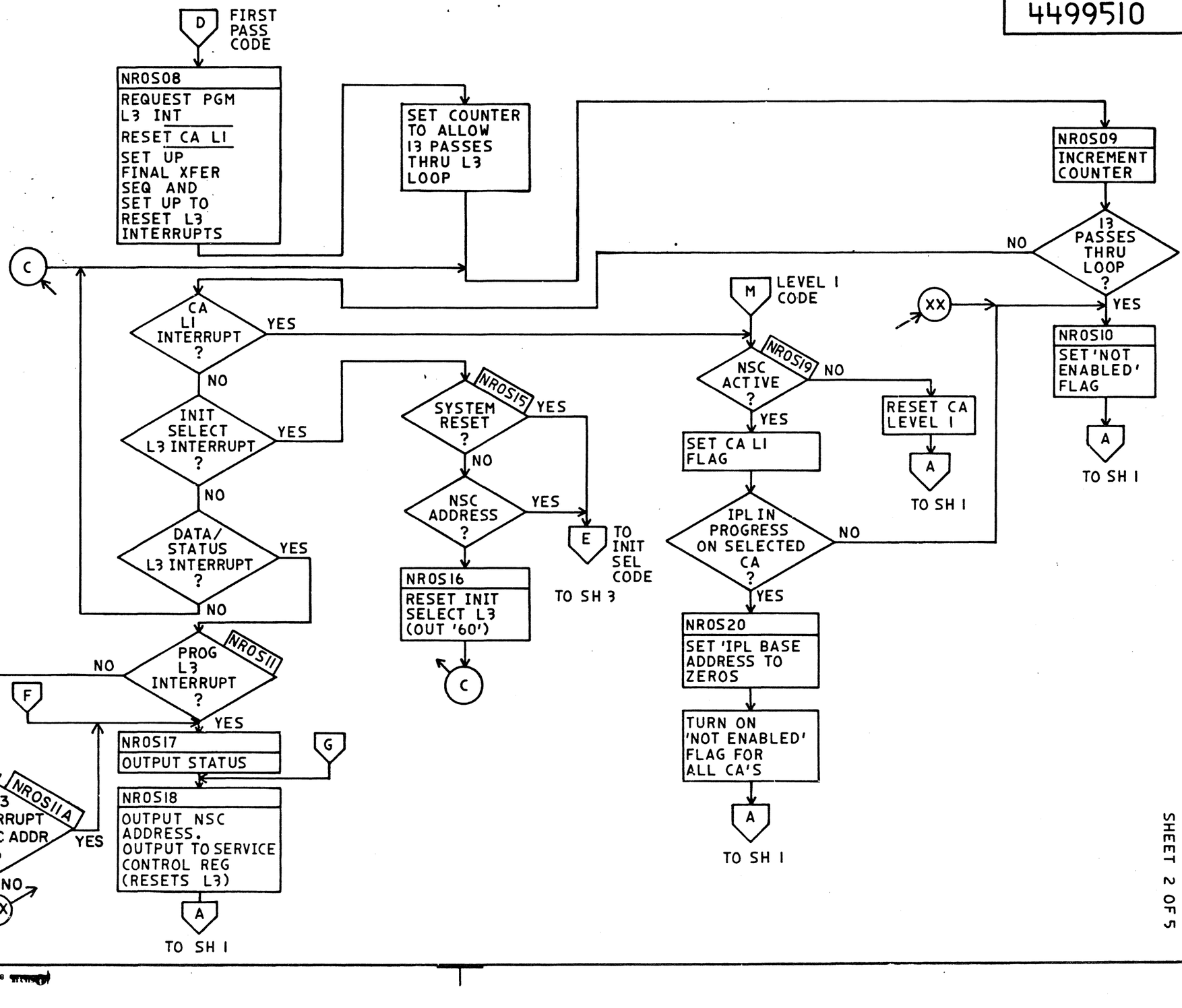

PART NO 4499510 | LOGIC PG NO CW500

SHEET 2 OF 5

"THIS DOCUMENT IS THE PROPERTY OF IBM. ITS USE IS AUTHORIZED ONLY FOR RESPONDING TO A REQUEST FOR QUOTATION OR FOR THE PERFORMANCE OF WORK FOR IBM. ALL QUESTIONS MUST BE REFERRED TO THE IBM PURCHASING DEPARTMENT."

4499510 B

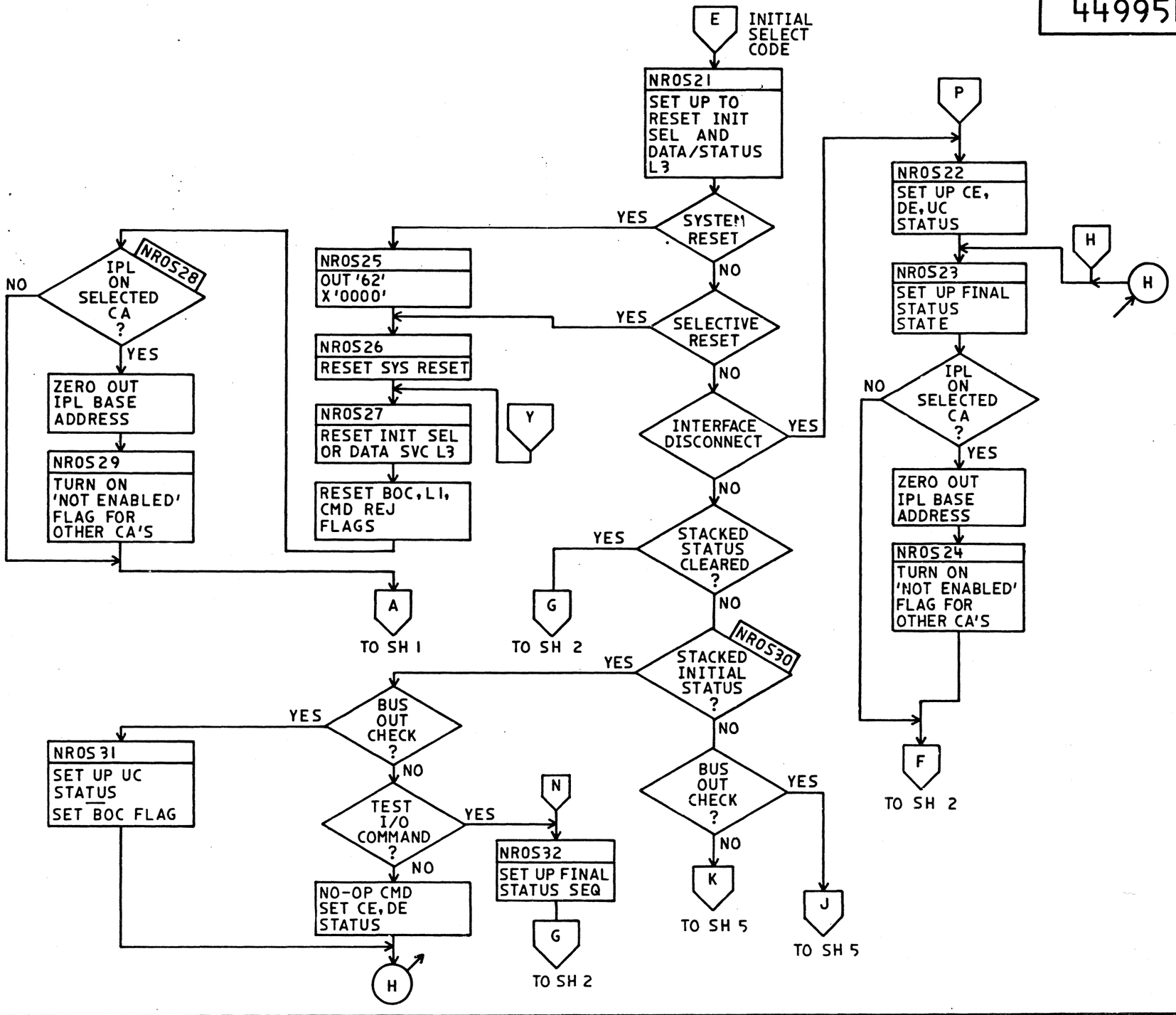

NAME	3705-80 N CHANNEL ADAPTER	REL	DATE	CHANGE NO	
	ROS FLOW CHART		JUN 81	344828	DEVELOPMENT NO
DESIGN	DJR JUN 81				
DETAIL					
CHECK	CLASSIFICATION				LOGIC PG NO CW500
APPRO	DJR JUN 81				

MUST CONFORM TO ENG SPEC

B 4499510

PART NO 4499510 LOGIC PG NO CW500

SHEET 3 OF 5

620 0133 1 MROR 780522203 VERTICAL ELECTRICAL FORMAT

4499510 B

THIS DOCUMENT IS THE PROPERTY OF IBM. ITS USE IS AUTHORIZED ONLY FOR RESPONDING TO A REQUEST FOR QUOTATION OR FOR THE PERFORMANCE OF WORK FOR IBM. ALL QUESTIONS MUST BE REFERRED TO THE IBM PURCHASING DEPARTMENT.

IBM

	NAME	DATE
APPRO		
CHECK		
DETAIL		
DESIGN	DJR	JUN 81

ADAPTER ROS FLOW CHART

3705-80 N CHANNEL

SHT 4 OF 5

CLASSIFICATION

MUST CONFORM TO ENG SPEC

	REL	CHANGE NO
DJR	JUN 81	344828

DEVELOPMENT NO

	DATE	CHANGE NO

LOGIC PG NO

CW500

4499510 B

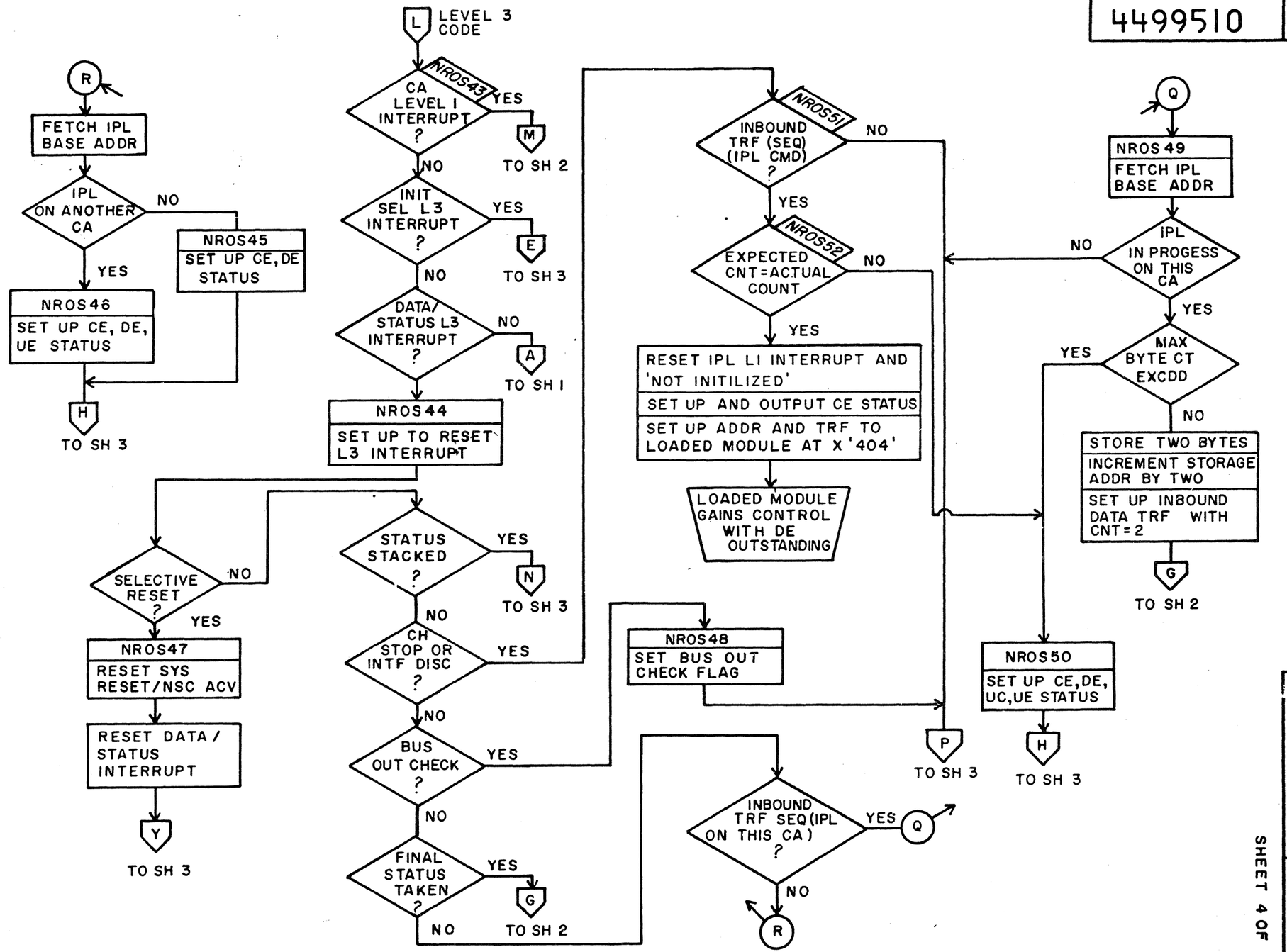

PART NO 4499510

LOGIC PG NO CW500

SHEET 4 OF 5

620-0133-1 MRO# 780522203 VERTICAL ELECTRICAL FORMAT

4499510 B

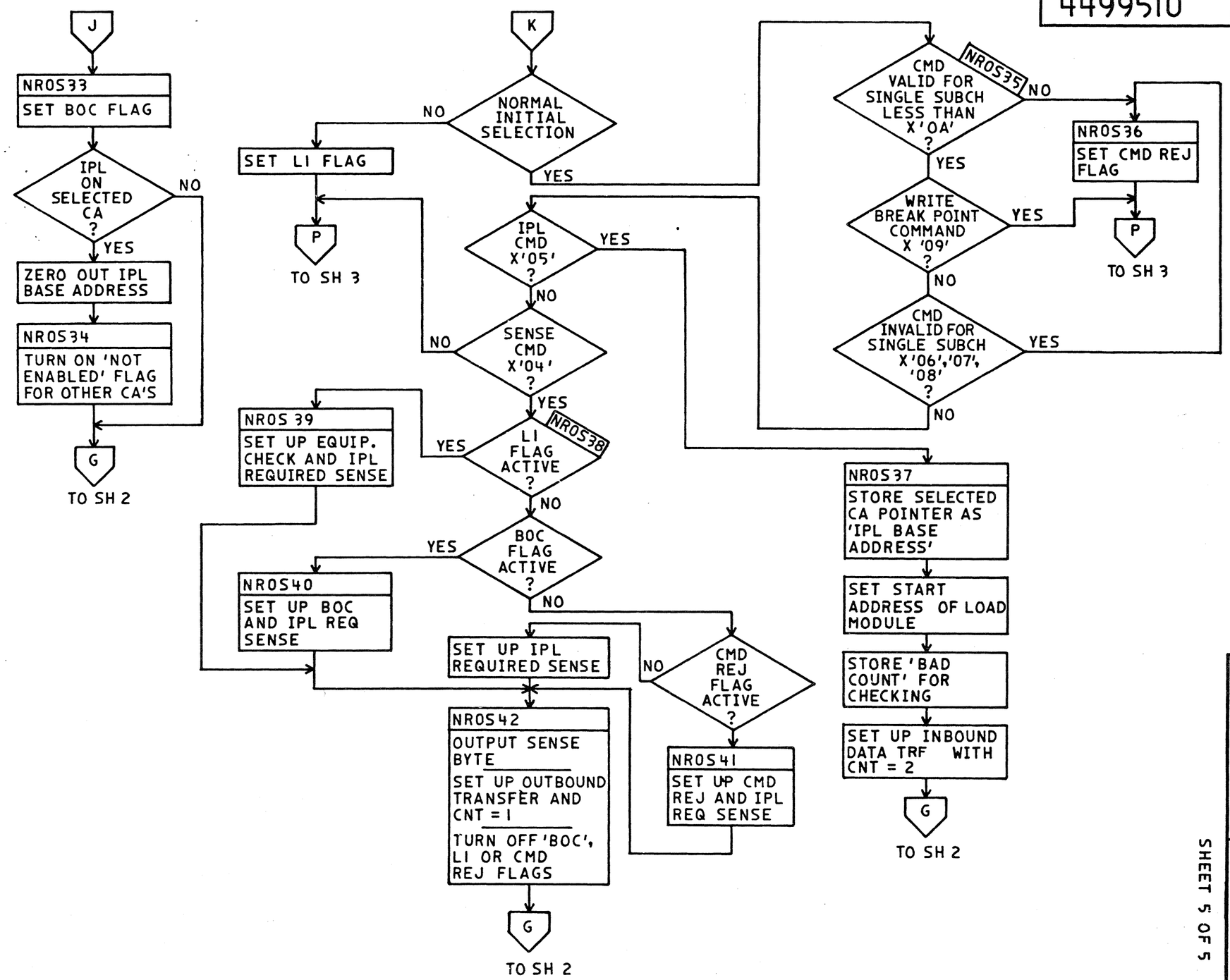

"THIS DOCUMENT IS THE PROPERTY OF IBM. ITS USE IS AUTHORIZED ONLY FOR RESPONDING TO A REQUEST FOR QUOTATION OR FOR THE PERFORMANCE OF WORK FOR IBM. ALL QUESTIONS MUST BE REFERRED TO THE IBM PURCHASING DEPARTMENT."

IBM

NAME	3705-80N CHANNEL ADAPTER	REL	DATE JUN 81
ROS FLOW CHART			
DESIGN	DJR JUN 81	SHT 5 OF 5	
DETAIL			
CHECK		CLASSIFICATION	
APPRO		DJR JUN 81	

MUST CONFORM TO ENG SPEC

CHANGE NO	344828	DEVELOPMENT NO	
DATE		LOGIC PG NO	CW500
CHANGE NO			

B 4499510

PART NO 4499510

LOGIC PG NO CW500

SHEET 5 OF 5

NROS 3705 TYPE 4 CHANNEL,N CHANNEL ROS CODE

EC 316673
DATE JANUARY, 1977
P/N 1749501
LOGIC CW501

```
  LOC  OBJ CODE  R1N1M R2N2 ADDR   STMT   SOURCE STATEMENT                                                                  1  00030
                                      2 X3705ADA START X'00000'                                                           1  00040
000000                                3 ZERO     EQU   *                                                                  1  00050
000000                                4 SROS     EQU   *                                                                  1  00060
0000C0                                5 RELOCF   EQU   X'00000'                                                           1  00070
000000                                6          DC    128X'7004'          OUTPUT STOP FILLERS                           1  00080
000000 7004700470047004               7          DC    128X'7004'          OUTPUT STOP FILLERS                           1  00090
000100 7004700470047004               8          DC    128X'7004'          OUTPUT STOP FILLERS                           1  00100
0002C0 7004700470047004               9          DC    128X'7004'          OUTPUT STOP FILLERS                           1  00110
000300 7004700470047004              10          ORG   SROS+RELOCF                                                         1  00120
000000                               11 ************************************************************************************ 1  00130
                                     12 *                                                                                  * 1  00140
                                     13 *                N CHANNEL ROS CODE                                                * 1  00150
                                     14 *                                                                                  * 1  00160
                                     15 *          THE FOLLOWING CODE WILL HANDLE THE IPL FUNCTION FOR UP                  * 1  00170
                                     16 *          TO FOUR TYPE 4 CHANNEL ADAPTERS.                                        * 1  00180
                                     17 *                                                                                  * 1  00190
                                     18 *          THE CHANNEL HANDLING SECTION LOADS THE INITIAL PROGRAM                  * 1  00200
                                     19 *          STARTING AT LOCATION X'400'.                                            * 1  00210
                                     20 *                                                                                  * 1  00220
                                     21 *          STORAGE LOCATIONS USED BY ROS:                                          * 1  00230
                                     22 *                                                                                  * 1  00240
                                     23 *          X'000' - X'3FF' = ROS PROGRAM                                           * 1  00250
                                     24 *                                                                                  * 1  00260
                                     25 *          X'700' = IPL IN PROGRESS FLAG                                           * 1  00270
                                     26 *                   EQUALS X'0000' IF IPL IS NOT IN PROGRESS.                      * 1  00280
                                     27 *                   EQUALS THE CHANNEL CONTROL BLOCK POINTER                       * 1  00290
                                     28 *                   ADDRESS OF CHANNEL WHICH HAS IPL IN PROGRESS.                  * 1  00300
                                     29 *                          X'03E8'= CA 1 IPL IN PROGRESS                           * 1  00310
                                     30 *                          X'03EE'= CA 2 IPL IN PROGRESS                           * 1  00320
                                     31 *                          X'03F4'= CA 3 IPL IN PROGRESS                           * 1  00330
                                     32 *                          X'03FA'= CA 4 IPL IN PROGRESS                           * 1  00340
                                     33 *                                                                                  * 1  00350
                                     34 *          X'702'= REGISTER X'76' ENTERING ROS (HALF WORD STORAGE)                 * 1  00360
                                     35 *          X'704'= REGISTER X'7D' ENTERING ROS (HALF WORD STORAGE)                 * 1  00370
                                     36 *          X'706'= REGISTER X'7E' ENTERING ROS (HALF WORD STORAGE)                 * 1  00380
                                     37 *                                                                                  * 1  00390
                                     38 *          X'708'= INITIAL IPL CHECK COMPLETED FLAG                                * 1  00400
                                     39 *                   EQUALS X'0000' IF INITIAL CHECK FOR IPL COMMAND                * 1  00410
                                     40 *                   HAS NOT BEEN COMPLETED FOR ALL CHANNEL ADAPTERS.               * 1  00420
                                     41 *                                                                                  * 1  00430
                                     42 *          X'70C'= ADDRESS COUNTER FOR INITIAL PROGRAM LOAD.                       * 1  00440
                                     43 *                                                                                  * 1  00450
                                     44 *          X'780'= REGISTER 0 ENTERING ROS (FULL WORD STORAGE).                    * 1  00460
                                     45 *          X'784'= REGISTER 1 ENTERING ROS (FULL WORD STORAGE).                    * 1  00470
                                     46 *          X'788'= REGISTER 2 ENTERING ROS (FULL WORD STORAGE).                    * 1  00480
                                     47 *          X'78C'= REGISTER 3 ENTERING ROS (FULL WORD STORAGE).                    * 1  00490
                                     48 *          X'790'= REGISTER 4 ENTERING ROS (FULL WORD STORAGE).                    * 1  00500
                                     49 *          X'794'= REGISTER 5 ENTERING ROS (FULL WORD STORAGE).                    * 1  00510
                                     50 *          X'798'= REGISTER 6 ENTERING ROS (FULL WORD STORAGE).                    * 1  00520
                                     51 *          X'79C'= REGISTER 7 ENTERING ROS (FULL WORD STORAGE).                    * 1  00530
                                     52 *                                                                                  * 1  00540
                                     53 ************************************************************************************ 1  00550
```

```
 LOC  OBJ CODE  R1N1M R2N2 ADDR   STMT   SOURCE STATEMENT

                                                                                
                                                                                
                                                                                
```

```
LOC  OBJ CODE  R1N1M R2N2 ADDR   STMT   SOURCE STATEMENT

*************************************************************************
*                                                                       *
*          CA 3 CONTROL BLOCK                                           *
*                                                                       *
*                   LOCATION X'3F4'                                     *
*                          BYTE 0  BIT 5= CA 3 CMD REJ FLAG             *
*                                  BIT 6= CA 3 BUS OUT CHECK FLAG       *
*                                  BIT 7= CA 3 EQUIPMENT CHECK FLAG     *
*                          BYTE 1  EQUALS X'04' FOR CA 3 SELECTED       *
*                                  MASK USED BY ROS PROGRAM             *
*                                                                       *
*                   LOCATION X'3F6'                                     *
*                          BYTE 0  EQUALS X'06' FOR CA 3 SELECTION      *
*                                  CONTROL USED BY ROS PROGRAM          *
*                          BYTE 1  BIT 4= CA 3 NOT ENABLED FLAG         *
*                                                                       *
*                   LOCATION X'3F8'  EQUALS X'3FA' WHICH IS THE         *
*                                    POINTER TO CA 4 CONTROL BLOCK      *
*                                                                       *
*************************************************************************
*                                                                       *
*          CA 4 CONTROL BLOCK                                           *
*                                                                       *
*                   LOCATION X'3FA'                                     *
*                          BYTE 0  BIT 5= CA 4 CMD REJ FLAG             *
*                                  BIT 6= CA 4 BUS OUT CHECK FLAG       *
*                                  BIT 7= CA 4 EQUIPMENT CHECK FLAG     *
*                          BYTE 1  EQUALS X'06' FOR CA 4 SELECTED       *
*                                  MASK USED BY ROS PROGRAM             *
*                                                                       *
*                   LOCATION X'3FC'                                     *
*                          BYTE 0  EQUALS X'07' FOR CA 4 SELECTION      *
*                                  CONTROL USED BY ROS PROGRAM          *
*                          BYTE 1  BIT 4= CA 4 NOT ENABLED FLAG         *
*                                                                       *
*                   LOCATION X'3FE'  EQUALS X'3E8' WHICH IS THE         *
*                                    POINTER TO CA 1 CONTROL BLOCK      *
*                                                                       *
*************************************************************************
```

NROS 3705 TYPE 4 CHANNEL,N CHANNEL ROS CODE

```
 LOC  OBJ CODE  R1N1M R2N2 ADDR   STMT   SOURCE STATEMENT

                                  141 ************************************************************************ 1  01410
                                  142 *                                                                      * 1  01420
                                  143 *        B R A N C H   O N   B I T   T E S T   ( P A R T   2 )         * 1  01430
                                  144 *                                                                      * 1  01440
                                  145 *        NOTE:  INSTRUCTION EXECUTION STARTS AT ADDRESS X'0010'        * 1  01450
                                  146 ************************************************************************ 1  01460
000000                            147 SMAXST   EQU   *                                                        1  01470
000000 7004       0    70         148          OUT   0,STOP              HARDSTOP - SHOULD NOT BE AT ZERO     1  01480

000002                            150 MAXIT01  EQU   *                                                        1  01500
000002 F6FF       7(0)            151          TRM   R7(0),X'FF'         HAVE WE FINISHED BRANCH ON BIT TEST  1  01510
000004 98B8                000BE  152          BCL   MAXIT07             BRANCH OUT OF TEST IF COMPLETE       1  01520

000006 80CE       1(0)            154          LRI   R1(0),X'CE'         SET UP BRANCH ON BIT INSTRUCTION     1  01540
000008 810B       1(1)            155          LRI   R1(1),X'0B'         SET UP BRANCH ON BIT INSTRUCTION     1  01550

00000A 86FF       7(0)            157          LRI   R7(0),X'FF'         SET ALL BITS ON IN REG 7             1  01570
00000C 87FF       7(1)            158          LRI   R7(1),X'FF'         SET ALL BITS ON IN REG 7             1  01580

00000E A8A2                000B2  160          B     MAXIT06             BRANCH TO CONTINUE TESTING           1  01600

                                  162 ************************************************************************ 1  01620
                                  163 *                                                                      * 1  01630
                                  164 *        I N I T I A L I Z A T I O N                                   * 1  01640
                                  165 *                                                                      * 1  01650
                                  166 *        START OF ROS CODE EXECUTION AT LOCATION X'0010'.              * 1  01660
                                  167 *        PARITY IS CORRECTED IN GROUP ZERO REGISTERS AND THESE         * 1  01670
                                  168 *        REGISTERS ARE STORED IN LOCATIONS X'0780-079F'.               * 1  01680
                                  169 *                                                                      * 1  01690
                                  170 ************************************************************************ 1  01700

000010 0082       0     0         172          ST    R0,0(R0)            SAVE LEVEL 1 AND 2 IAR               1  01720
000012 0014       0    01         173          OUT   R0,X'01'            SET GOOD PARITY IN R1                1  01730
000014 0186       1     0         174          ST    R1,4(R0)            SAVE R1                              1  01740

000016 0024       0    02         176          OUT   R0,X'02'            SET GOOD PARITY IN R2                1  01760
000018 028A       2     0         177          ST    R2,8(R0)            SAVE R2                              1  01770

00001A 0034       0    03         179          OUT   R0,X'03'            SET GOOD PARITY IN R3                1  01790
00001C 038E       3     0         180          ST    R3,12(R0)           SAVE R3                              1  01800

00001E 0044       0    04         182          OUT   R0,X'04'            SET GOOD PARITY IN R4                1  01820
000020 0492       4     0         183          ST    R4,16(R0)           SAVE R4                              1  01830

000022 0054       0    05         185          OUT   R0,X'05'            SET GOOD PARITY IN R5                1  01850
000024 0596       5     0         186          ST    R5,20(R0)           SAVE R5                              1  01860

000026 0064       0    06         188          OUT   R0,X'06'            SET GOOD PARITY IN R6                1  01880
000028 069A       6     0         189          ST    R6,24(R0)           SAVE R6                              1  01890

00002A 0074       0    07         191          OUT   R0,X'07'            SET GOOD PARITY IN R7                1  01910
00002C 079E       7     0         192          ST    R7,28(R0)           SAVE R7                              1  01920
```

```
                                                                                                                                  1  01950
                                                                                                                                  1  01960
                                                                                                                                  1  01970
                                                                                                                                  1  01980
                                                                                                                                  1  01990
                                                                                                                                  1  02000
                                                                                                                                  1  02010
                                                                                                                                  1  02020
                                                                                                                                  1  02030
                                                                                                                                  1  02040
00002E A804                  00034                  B     MAXIT02          BRANCH AROUND ERROR OUTPUT                                1  02060
                                                                                                                                  1  02060
000030                                      MAXIE01  EQU   *                                                                       1  02070
000030 7004      0    70                            OUT   0,STOP           AN INSTRUCTION OR DATA FLOW HAS                         1  02080
000032 0000                                          DC    X'0000'          FAILED                                                  1  02080
                                                                                                                                  1  02100
000034                                      MAXIT02  EQU   *                                                                       1  02100
000034 8000      1(0)                                LRI   R1(0),X'00'      LOAD ZERO'S INTO REG 1 BYTE 0                           1  02110
000036 9809                  00030                   BCL   MAXIE01          LRI, BCL OR DATA FLOW FAILURE                           1  02120
000038 8100      1(1)                                LRI   R1(1),X'00'      LOAD ZERO'S INTO REG 1 BYTE 1                           1  02130
00003A 980D                  00030                   BCL   MAXIE01          LRI, BCL OR DATA FLOW FAILURE                           1  02140
                                                                                                                                  1  02160
00003C D100      1(1)                                ORI   R1(1),X'00'      OR ZERO'S WITH REG 1 BYTE 1                             1  02170
00003E 9100      1(1)                                ARI   R1(1),X'00'      ADD ZERO'S WITH REG 1 BYTE 1                            1  02180
000040 F1FF      1(1)                                TRM   R1(1),X'FF'      ARE ANY BITS ON?                                        1  02190
000042 9815                  00030                   BCL   MAXIE01          ORI, ARI, TRM, OR DATA FLOW FAILURE                     1  02190
                                                                                                                                  1  02210
000044 D1FF      1(1)                                ORI   R1(1),X'FF'      OR ALL BITS ON WITH REG 1 BYTE 1                        1  02220
000046 91FF      1(1)                                ARI   R1(1),X'FF'      ADD ALL BITS ON WITH REG 1 BYTE 1                       1  02230
000048 F101      1(1)                                TRM   R1(1),X'01'      TEST FOR LOW ORDER BIT OFF                              1  02240
00004A 981D                  00030                   BCL   MAXIE01          ORI, ARI, TRM, OR DATA FLOW FAILURE                     1  02240
                                                                                                                                  1  02260
00004C F001      1(0)                                TRM   R1(0),X'01'      DID ADD PROPAGATE?                                      1  02270
00004E 8821                  00030                   BZL   MAXIE01          ORI, ARI, TRM, BZL OR DATA FLOW                         1  02280
                                                                                                                                  1  02280
000050 D0FF      1(0)                                ORI   R1(0),X'FF'      OR ALL BITS ON WITH REG 1 BYTE 0                        1  02300
000052 90FF      1(0)                                ARI   R1(0),X'FF'      ADD ALL BITS ON WITH REG 1 BYTE 0                       1  02310
000054 9802                  00058                   BCL   MAXIT04          BRANCH IF ADD PROPAGATED                                1  02320
                                                                                                                                  1  02340
000056                                      MAXIT03  EQU   *                                                                       1  02340
000056 FFFF                                          DC    X'FFFF'          THIS IS A CONSTANT FOR TESTING, AS A                    1  02350
                                                                                                                                  1  02360
                                                                                                                                  1  02370
                                                                                                                                  1  02390
000058                                      MAXIT04  EQU   *                                                                       1  02390
000058 8000      1(0)                                LRI   R1(0),X'00'      LOAD ZERO'S INTO REG 1 BYTE 0                           1  02400
00005A D000      1(0)                                ORI   R1(0),X'00'      OR ZERO'S WITH REG 1 BYTE 0                             1  02410
00005C 9000      1(0)                                ARI   R1(0),X'00'      ADD ZERO'S WITH REG 1 BYTE 0                            1  02420
00005E F0FF      1(0)                                TRM   R1(0),X'FF'      ARE ANY BITS ON?                                        1  02430
000060 9833                  00030                   BCL   MAXIE01          ORI, ARI, TRM OR DATA FLOW FAILURE                      1  02440
```

```
                                                                                                                  1  02470
                                                                                                                  1  02480
                                                                                                                  1  02490
                                                                                                                  1  02500
                                                                                                                  1  02510
                                                                                                                  1  02520
                                                                                                                  1  02530

000062 77C8      7     7                  XR    R7,R7                CLEAR REG 7                                1  02550

000000                                    USING SMAXST,R7                                                        1  02570
C00064 7157      1     7     00056        LH    R1,MAXIT03           LOAD ALL BITS ON INTO REG 1                1  02580
                                          DROP  R7                                                               1  02590

000066 051C      5    01                  IN    R5,X'01'             INPUT REG 1 TO REG 5                       1  02610
000068 0134      1    03                  OUT   R1,X'03'             OUTPUT REG 1 TO REG 3                      1  02620

C0006A 53C8      3     5                  XR    R3,R5                ARE REG 3 AND REG 5 EQUAL?                 1  02640
00006C 983F                00030          BCL   MAXIE01              EXCLUSIVE OR REGISTER, LOAD HALFWORD       1  02650
                                          *                          INPUT, OR OUTPUT INSTRUCTION FAILURE       1  02660

00006E 73C8      3     7                  XR    R3,R7                ARE REG 3 AND REG 7 EQUAL?                 1  02680
000070 9843                00030          BCL   MAXIE01              EXCLUSIVE OR REGISTER, LOAD HALFWORD       1  02690
                                          *                          INPUT, OR OUTPUT INSTRUCTION FAILURE       1  02700

000072 17C8      7     1                  XR    R7,R1                EXCLUSIVE OR ALL BITS ON INTO REG 7        1  02720

000074 0354      3    05                  OUT   R3,X'05'             OUTPUT ZERO'S TO REG 5                     1  02740
000076 013C      1    03                  IN    R1,X'03'             INPUT ZERO'S TO REG 1                      1  02750

000078 15C8      5     1                  XR    R5,R1                ARE REG 5 AND REG 1 EQUAL?                 1  02770
00007A 984D                00030          BCL   MAXIE01              EXCLUSIVE OR REGISTER, INPUT, OR           1  02780
                                          *                          OUTPUT INSTRUCTION FAILURE                 1  02790
```

```
                                                                                                                                  1  02820
                                                                                                                                  1  02830
                                                                                                                                  1  02840
                                                                                                                                  1  02850
                                                                                                                                  1  02860
                                                                                                                                  1  02870
                                                                                                                                  1  02880
                                                                                                                                  1  02890
                                                                                                                                  1  02900

00007C 8007      1(0)                  292          LRI   R1(0),X'07'        SET UP ADDRESS FOR TESTING                1  02920
00007E 1785      7     1               293          STH   R7,4(R1)           STORE HALFWORD WITH ALL BITS ON           1  02930
000080 1305      3     1               294          LH    R3,4(R1)           LOAD HALFWORD PREVIOUSLY STORED           1  02940
000082 73C8      3     7               295          XR    R3,R7              ARE REG 3 AND REG 7 EQUAL?                1  02950
000084 9857                  00030     296          BCL   MAXIE01            STORE HALFWORD OR LOAD HALFWORD           1  02960
                                       297 *                                 FAILURE                                   1  02970

000086 1585      5     1               299          STH   R5,4(R1)           STORE HALFWORD WITH ALL BITS OFF          1  02990
000088 1305      3     1               300          LH    R3,4(R1)           LOAD HALFWORD PREVIOUSLY STORED           1  03000
00008A 53C8      3     5               301          XR    R3,R5              ARE REG 3 AND REG 5 EQUAL?                1  03010
00008C 985F                  00030     302          BCL   MAXIE01            STORE HALFWORD OR LOAD HALFWORD           1  03020
                                       303 *                                 INSTRUCTION FAILURE                       1  03030

00008E 1786      7     1               305          ST    R7,4(R1)           STORE ALL BITS ON FOR THE SECOND          1  03050
                                       306 *                                 HALFWORD                                  1  03060
000090 1305      3     1               307          LH    R3,4(R1)           LOAD FIRST HALFWORD OF THE FULLWORD       1  03070
                                       308 *                                 PREVIOUSLY STORED                         1  03080
000092 53C8      3     5               309          XR    R3,R5              ARE THEY EQUAL?                           1  03090
000094 9867                  00030     310          BCL   MAXIE01            STORE INSTRUCTION FAILURE                 1  03100

000096 1507      5     1               312          LH    R5,6(R1)           LOAD SECOND HALFWORD OF THE FULLWORD      1  03120
                                       313 *                                 PREVIOUSLY STORED                         1  03130
000098 75C8      5     7               314          XR    R5,R7              ARE REG5 AND REG 7 EQUAL?                 1  03140
00009A 986D                  00030     315          BCL   MAXIE01            STORE INSTRUCTION FAILURE                 1  03150

00009C 1586      5     1               317          ST    R5,4(R1)           STORE ALL BITS OFF IN THE SECOND          1  03170
                                       318 *                                 HALFWORD                                  1  03180
C0009E 0707      7     0               319          LH    R7,6(R0)           LOAD SECOND HALFWORD OF THE FULLWORD      1  03190
                                       320 *                                 PREVIOUSLY STORED                         1  03200
0000A0 75C8      5     7               321          XR    R5,R7              ARE REG 5 AND REG 7 EQUAL?                1  03210
0000A2 9875                  00030     322          BCL   MAXIE01            STORE INSTRUCTION FAILURE                 1  03220
```

```
LOC  OBJ CODE  R1N1M R2N2 ADDR   STMT   SOURCE STATEMENT

                                  325 ************************************************************************ 1  03250
                                  326 *                                                                      * 1  03260
                                  327 *   B R A N C H   O N   B I T   T E S T   ( P A R T   1 )              * 1  03270
                                  328 *                                                                      * 1  03280
                                  329 *        THIS TEST IS ACCOMPLISHED BY CHANGING THE BRANCH ON BIT       * 1  03290
                                  330 *        INSTRUCTION EACH TIME THROUGH.  BRANCH ON BIT IS TESTED       * 1  03300
                                  331 *        NOT TO BRANCH WHEN BIT IS OFF AND THEN TO BRANCH WHEN         * 1  03310
                                  332 *        THE BIT IS ON.                                                * 1  03320
                                  333 *                                                                      * 1  03330
                                  334 ************************************************************************ 1  03340

0000A4 80CE      1(0)             336          LRI   R1(0),X'CE'        SET UP BRANCH ON BIT INSTRUCTION     1  03360
0000A6 8106      1(1)             337          LRI   R1(1),X'06'        SET UP BRANCH ON BIT INSTRUCTION     1  03370

                                  339 ************************************************************************ 1  03390
                                  340 *****    NOTE:  NEXT INSTRUCTION IS ADDRESS SENSITIVE            ***** 1  03400
                                  341 ************************************************************************ 1  03410
0000A8 83B4      3(1)             342          LRI   R3(1),X'B4'        SET UP ADDRESS FOR BRANCH ON BIT     1  03420
                                  343 *                                 INSTRUCTION                          1  03430
0000AA A806                000B2  344          B     MAXIT06            BRANCH TO BEGIN TEST                 1  03440

0000AC                            346 MAXIT05  EQU   *                                                        1  03460
0000AC 9180      1(1)             347          ARI   R1(1),X'80'        UPDATE INSTRUCTION TO BE TESTED      1  03470
0000AE 98AF                00002  348          BCL   MAXIT01            BRANCH INSTRUCTION HAS GONE THROUGH  1  03480
                                  349 *                                 SIXTEEN ITERATIONS                   1  03490
0000B0 D00E      1(0)             350          ORI   R1(0),X'0E'        CORRECT INSTRUCTION WHEN PROPAGATION 1  03500
                                  351 *                                 OCCURS OVER THREE BITS REPRESENTING  1  03510
                                  352 *                                 REG 7                                1  03520

0000B2                            354 MAXIT06  EQU   *                                                        1  03540
0000B2 3181      1     3          355          STH   R1,0(R3)           STORE BRANCH ON BIT INSTRUCTION      1  03550
0000B4 CE06      7(0,0)   000BC  356          BB    R7(0,0),MAXIEC2    ** THIS INSTRUCTION CHANGES    ***   1  03560
0000B6 F6FF      7(0)             357          TRM   R7(0),X'FF'        IF BRANCH DID NOT OCCUR SHOULD IT    1  03570
                                  358 *                                 HAVE?                                1  03580
0000B8 9802                000BC  359          BCL   MAXIE02            YES, IT SHOULD HAVE OCCURED BUT DID  1  03590
                                  360 *                                 NOT                                  1  03600

0000BA 8811                000AC  362          BZL   MAXIT05            BRANCH TO SET UP NEXT BRANCH ON BIT  1  03620
                                  363 *                                 INSTRUCTION                          1  03630

0000BC 7004      0     70         365 MAXIE02  OUT   0,STOP                                                   1  03650
```

```
                                                                                                                                  EC                 316673
NROS   3705 TYPE 4 CHANNEL,N CHANNEL ROS CODE                                                                                     DATE               JANUARY, 1977
                                                                                                                                  P/N                1749509
  LOC  OBJ CODE  R1N1M R2N2 ADDR   STMT   SOURCE STATEMENT                                                                        LOGIC              CW509

                                  368 ************************************************************************ 1  03680
                                  369 *                                                                      * 1  03690
                                  370 *   G E N E R A L   R E G I S T E R   P A R I T Y   C O R R E C T E D * 1  03700
                                  371 *                                                                      * 1  03710
                                  372 *        AN OUTPUT TO EACH OF THE GROUPS 1, 2, & 3 REGISTERS           * 1  03720
                                  373 *        CORRECTS ANY BAD PARITY THAT MAY HAVE RESULTED FROM           * 1  03730
                                  374 *        POWERING ON.                                                  * 1  03740
                                  375 *                                                                      * 1  03750
                                  376 ************************************************************************ 1  03760

0000BE                            378 MAXIT07  EQU   *                                                        1  03780
0000BE 8174       1(1)            379          LRI   R1(1),X'74'        LOAD OUTPUT INSTRUCTION               1  03790

                                  381 ************************************************************************ 1  03810
                                  382 *****    NOTE:  NEXT INSTRUCTION IS ADDRESS SENSITIVE             ***** 1  03820
                                  383 ************************************************************************ 1  03830
0000C0 83C8       3(1)            384          LRI   R3(1),X'C8'        LOAD ADDRESS OF OUTPUT INSTRUCTION    1  03840

0000C2                            386 MAXIT08  EQU                                                            1  03860
0000C2 9110       1(1)            387          ARI   R1(1),X'10'        UPDATE INSTRUCTION                    1  03870
0000C4 F886       1(0,7)    000CC 388          BB    R1(0,7),MAXIT10    BRANCH WHEN GROUP 1 IS CORRECTED      1  03880

0000C6                            390 MAXIT09  EQU   *                                                        1  03900
0000C6 3181       1     3         391          STH   R1,0(R3)           STORE OUTPUT INSTRUCTION              1  03910
0000C8 0084       0    08         392          OUT   R0,X'08'           *** THIS INSTRUCTION CHANGES    **** 1  03920
0000CA A80B                 000C2 393          B     MAXIT08            BRANCH TO CONTINUE UPDATING OF THE    1  03930
                                  394 *                                 OUTPUT INSTRUCTION                    1  03940

0000CC                            396 MAXIT10  EQU   *                                                        1  03960
0000CC D884       1(0,3)    000D2 397          BB    R1(0,3),ESCCHK     BRANCH TO IPL HANDLER WHEN GROUP 2    1  03970
                                  398 *                                 AND 3 ARE PARITY CORRECTED            1  03980

0000CE 8010       1(0)            400          LRI   R1(0),X'10'        SET UP TO CORRECT PARITY OF GROUP 2   1  04000
                                  401 *                                 AND GROUP 3 REGISTERS                 1  04010
0000D0 A80D                 000C6 402          B     MAXIT09            BRANCH TO START PARITY CORRECTION     1  04020

                                  405 ************************************************************************ 1  04050
                                  406 *                                                                      * 1  04060
                                  407 *   R O S   E S C A P E   H A N D L I N G                              * 1  04070
                                  408 *                                                                      * 1  04080
                                  409 ************************************************************************ 1  04090

0000D2                            411 ESCCHK   EQU   *                                                        1  04110
0000D2 719C       1    79         412          IN    R1,X'79'           INPUT UTILITY REG FOR ESCAPE BIT      1  04120
0000D4 F982       1(1,7)    000D8 413          BB    R1(1,7),ROS01      BRANCH BIT IS ON FOR NO ESCAPE        1  04130

0000D6 AE24                 006FC 415          B     ESCAPE             BRANCH TO ESCAPE TO CORRECTED CODE    1  04150
0006FC                            416 ESCAPE   EQU   SROS+X'6FC'                                              1  04160
```

```
                                                                                                                                  1  04190
                                                                                                                                  1  04200
                                                                                                                                  1  04210
                                                                                                                                  1  04220
                                                                                                                                  1  04230
                                                                                                                                  1  04240
                                                                                                                                  1  04250
                                                                                                                                  1  04260
                                                                                                                                  1  04270
                                                                                                                                  1  04280
                                                                                                                                  1  04290
                                                                                                                                  1  04310
0000D8                                                                                                                                  1  04320
0000D8 71DC       1     7D                                                                                                                1  04330
0000DA 0185       1      0                                                                                                                1  04350
0000DC 716C       1     76                                                                                                                1  04360
0000DE 0183       1      0                                                                                                                1  04370
                                                                                                                                                1  04380
0000E0 71EC       1     7E                                                                                                                1  04400
0000E2 0187       1      0                                                                                                                1  04410
0000E4 F902       1(1,6)     000E8                                                                                                        1  04430
                                                                                                                                                1  04440
0000E6 7004       0     70                                                                                                                1  04450

                                                                                                                                  1  04480
                                                                                                                                  1  04490
                                                                                                                                  1  04500
                                                                                                                                  1  04510
                                                                                                                                  1  04520
0000E8                                                                                                                                  1  04530
0000E8 11C8       1      1                                                                                                                1  04540
0000EA 0181       1      0                                                                                                                1  04550
0000EC 8040       1(0)                                                                                                                    1  04570
0000EE 7174       1     77                                                                                                                1  04580
                                                                                                                                                1  04590
0000F0 11C8       1      1                                                                                                                1  04600
0000F2 8110       1(1)                                                                                                                    1  04610
0000F4 7194       1     79                                                                                                                1  04620
```

```
                                                                                                                                  1  04190
                                                                                                                                  1  04200
                                                                                                                                  1  04210
                                                                                                                                  1  04220
                                                                                                                                  1  04230
                                                                                                                                  1  04240
                                                                                                                                  1  04250
                                                                                                                                  1  04260
                                                                                                                                  1  04270
                                                                                                                                  1  04280
                                                                                                                                  1  04290
                                                                                                                                  1  04310
                                                                                                                                  1  04320
                                                                                                                                  1  04330
                                                                                                                                  1  04350
                                                                                                                                  1  04360
                                                                                                                                  1  04370
                                                                                                                                  1  04380
                                                                                                                                  1  04400
                                                                                                                                  1  04410
                                                                                                                                  1  04430
                                                                                                                                  1  04440
                                                                                                                                  1  04450
                                                                                                                                  1  04480
                                                                                                                                  1  04490
                                                                                                                                  1  04500
                                                                                                                                  1  04510
                                                                                                                                  1  04520
                                                                                                                                  1  04530
                                                                                                                                  1  04540
                                                                                                                                  1  04550
                                                                                                                                  1  04570
                                                                                                                                  1  04580
                                                                                                                                  1  04590
                                                                                                                                  1  04600
                                                                                                                                  1  04610
                                                                                                                                  1  04620
```

```
                                                                                                                                  1  04650
                                                                                                                                  1  04660
                                                                                                                                  1  04670
                                                                                                                                  1  04680
                                                                                                                                  1  04690

0000F6 77C8       7     7                                  XR    R7,R7                CLEAR REG 7                                1  04710
000000                                                      USING SMAXST,R7                                                         1  04720
0000F8 7457       4     7   00056                          LH    R4,MAXIT03           LOAD ALL BITS ON INTO REG 4                1  04730
0000FA 7657       6     7   00056                          LH    R6,MAXIT03           LOAD ALL BITS ON INTO REG 6                1  04740
                                                            DROP  R7                                                                1  04750
0000FC 64C8       4     6                                  XR    R4,R6                ARE REG 4 AND REG 6 EQUAL                  1  04760
0000FE 98D1                 00030                          BCL   MAXIE01              REG 4 OR REG 6 FAILED TO SET               1  04770
000100 66C8       6     6                                  XR    R6,R6                CLEAR REG 6                                1  04780
000102 64C8       4     6                                  XR    R4,R6                ARE REG 4 AND REG 6 EQUAL                  1  04790
000104 98D7                 00030                          BCL   MAXIE01              REG 4 OR REG 6 FAILED TO CLEAR             1  04800

                                                                                                                                  1  04820
                                                                                                                                  1  04830
                                                                                                                                  1  04840
                                                                                                                                  1  04850
                                                                                                                                  1  04860
                                                                                                                                  1  04870
                                                                                                                                  1  04880
                                                                                                                                  1  04890
                                                                                                                                  1  04900

0001C6                                                      NROS01  EQU   *                                                         1  04920
0001C6 0081       0     0                                  STH   R0,0(R0)             ZERO OUT IPL BASE ADDR X'700'              1  04930
000108 0089       0     0                                  STH   R0,8(R0)             ZERO OUT IPL CHECK BYTE X'708'             1  04940
00010A 8203       3(0)                                     LRI   R3(0),X'03'          GET CHANNEL CONTROL BLOCK                  1  04950
0001CC 83E8       3(1)                                     LRI   R3(1),X'E8'          ADDRESS FOR CA1                            1  04960
00010E 34C8       4     3                                  XR    R4,R3                MOVE CHCB1 ADDRESS TO REG 4                1  04970
000110 A814                 00126                          B     NROS03                                                            1  04980
```

```
                                                                                                                                  1  04650
                                                                                                                                  1  04660
                                                                                                                                  1  04670
                                                                                                                                  1  04680
                                                                                                                                  1  04690

                                                                                                                                  1  04710
                                                                                                                                  1  04720
                                                                                                                                  1  04730
                                                                                                                                  1  04740
                                                                                                                                  1  04750
                                                                                                                                  1  04760
                                                                                                                                  1  04770
                                                                                                                                  1  04780
                                                                                                                                  1  04790
                                                                                                                                  1  04800

                                                                                                                                  1  04820
                                                                                                                                  1  04830
                                                                                                                                  1  04840
                                                                                                                                  1  04850
                                                                                                                                  1  04860
                                                                                                                                  1  04870
                                                                                                                                  1  04880
                                                                                                                                  1  04890
                                                                                                                                  1  04900

                                                                                                                                  1  04920
                                                                                                                                  1  04930
                                                                                                                                  1  04940
                                                                                                                                  1  04950
                                                                                                                                  1  04960
                                                                                                                                  1  04970
                                                                                                                                  1  04980
```

```
LOC  OBJ CODE  R1N1M R2N2 ADDR   STMT   SOURCE STATEMENT

                                  501 ************************************************************************ 1  05010
                                  502 *                                                                      * 1  05020
                                  503 *          THIS SECTION IS ENTERED BY BRANCHING FROM                   * 1  05030
                                  504 *          NROS11.  THE DATA STATUS INTERRUPT ADDRESS                  * 1  05040
                                  505 *          IS COMPARED WITH THE NSC ADDRESS.                           * 1  05050
                                  506 *                                                                      * 1  05060
                                  507 ************************************************************************ 1  05070

000112                            509 NROS11A  EQU   *                                                         1  05090
000112 613C      1    63          510          IN    R1,X'63'          FETCH ADDRESS BYTE                      1  05100
000114 657C      5    67          511          IN    R5,X'67'          FETCH NSC ADDRESS                       1  05110
000116 8100      1(1)             512          LRI   R1(1),X'C0'                                                1  05120
C00118 850C      5(1)             513          LRI   R5(1),X'00'                                                1  05130
00011A 15C8      5     1          514          XR    R5,R1             COMPARE ADDRESSES                       1  05140
00011C 987A                00198  515          BCL   NROS10           BRANCH IF NOT EQUAL                      1  05150
00011E A8B2                001D2  516          B     NROS17            BRANCH TO OUTPUT STATUS                  1  05160
000120 7004      0    70          517          OUT   0,STOP           HARDSTOP- SHOULD NOT BE HERE              1  05170
000122 7004      0    70          518          OUT   0,STOP          HARDSTOP- SHOULD NOT BE HERE               1  05180
000124 7004      0    70          519          OUT   0,STOP           HARDSTOP- SHOULD NOT BE HERE              1  05190

                                  521 ************************************************************************ 1  05210
                                  522 *                                                                      * 1  05220
                                  523 *   THIS SECTICN CONTROLS THE SCANNING OF THE 4 CHANNEL ADAPTERS .     * 1  05230
                                  524 *   EACH ADAPTER IS SCANNED (SELECTED) TO DETERMINE IF THE ADAPTER     * 1  05240
                                  525 *   IS INSTALLED. IF THE SCANNED ADAPTER IS NOT INSTALLED, THE         * 1  05250
                                  526 *   NEXT ADAPTER IN THE SEQUENCE IS SCANNED.  INITIALLY, EACH          * 1  05260
                                  527 *   ADAPTER IS CHECKED FOR AN IPL CMD.  IF AN ADAPTER HAS RECEIVED     * 1  05270
                                  528 *   AN IPL CMD, THE IPL BEGINS ON THAT ADAPTER.                        * 1  05280
                                  529 *                                                                      * 1  05290
                                  530 ************************************************************************ 1  05300

000126                            532 NROS03   EQU   *                                                         1  05320
000126 4405      4     4          533          LH    R4,4(R4)          LOAD LINK TO NEXT CA CHCB                1  05330
C00128 4303      3     4          534          LH    R3,2(R4)          GET SELECTION/ENABLE CONTROLS            1  05340
00012A 6374      3    67          535          OUT   R3,X'67'          SELECT CA                                1  05350
00012C 717C      1    77          536          IN    R1,X'77'          GET SELECTION BITS                       1  05360
00012E 4501      5     4          537          LH    R5,0(R4)          GET FLAGS AND SELECT MASK                1  05370
C00130 51C8      1     5          538          XR    R1,R5             COMPARE                                  1  05380
C00132 F106      1(1)             539          TRM   R1(1),X'06'       CORRECT CA SELECTED ?                    1  05390
000134 9811                00126  540          BCL   NROS03            BRANCH TO SCAN NEXT CA                   1  05400
000136 677C      7    67          541          IN    R7,X'67'                                                   1  05410
000138 0609      6     0          542          LH    R6,8(R0)          GET INIT IPL CHECK FLAG BYTE             1  05420
00013A 880C                00148  543          BZL   NROS04            BRANCH TO CHECK FOR IPL CMD              1  05430
00013C EB2C      3(1,4)    0016A  544          BB    R3(1,4),NROSC5    BRANCH TO CHECK ENABLE                   1  05440
C0013E EF06      7(1,4)    00146  545          BB    R7(1,4),BRPOINT   BRANCH TO BRANCH POINT                   1  05450
000140 8308      3(1)             546          LRI   R3(1),X'08'       TURN ON CA NOT ENABLED BIT               1  05460
000142 4383      3     4          547          STH   R3,2(R4)          STORE SELECTION/ENABLE CONTROLS          1  05470
000144 A821                00126  548          B     NROS03            BRANCH TO SCAN NEXT CA                   1  05480
000146 A9B2                002FA  549 BRPOINT  B     NROS43            BRANCH TO CHECK FOR L3 INTERRUPT         1  05490
```

```
LOC  OBJ CODE  R1N1M R2N2 ADDR   STMT   SOURCE STATEMENT

                                  552 ************************************************************************ 1  05520
                                  553 *                                                                      * 1  05530
                                  554 *              INITIAL IPL CHECK                                       * 1  05540
                                  555 *                                                                      * 1  05550
                                  556 *   THIS SECTION CHECKS EACH INSTALLED ADAPTER FOR AN IPL COMMAND      * 1  05560
                                  557 *   ONLY ON THE FIRST PASS THRU THE CODE.                              * 1  05570
                                  558 *                                                                      * 1  05580
                                  559 ************************************************************************ 1  05590

000148                            561 NROS04   EQU   *                                                        1  05610
000148 F506      5(1)             562          TRM   R5(1),X'06'                                              1  05620
00014A 9802                0014E  563          BCL   CHKIPL01          CA1 IS NOT SELECTED                    1  05630
00014C 0489      4     0          564          STH   R4,8(R0)          SET INIT IPL CHECK BYTE TO NON ZERO    1  05640
00014E EF02      7(1,4)    00152  565 CHKIPL01 BB    R7(1,4),CHKIPL02  BRANCH IF CA IS ENABLED                1  05650
000150 A82D                00126  566          B     NROS03            BRANCH TO SCAN NEXT CA                 1  05660
000152 E902      1(1,4)    00156  567 CHKIPL02 BB    R1(1,4),CHKIPL03  LEVEL 3 INTERRUPT                      1  05670
000154 A831                00126  568          B     NROS03            BRANCH TO SCAN NEXT CA                 1  05680
000156 610C      1    60          569 CHKIPL03 IN    R1,X'60'                                                 1  05690
000158 C802      1(0,0)    0015C  570          BB    R1(0,0),CHKIPL04  INITIAL SELECT INTERRUPT               1  05700
00015A A837                00126  571          B     NROS03            BRANCH TO SCAN NEXT CA                 1  05710
00015C 611C      1    61          572 CHKIPL04 IN    R1,X'61'                                                 1  05720
00015E 8705      7(1)             573          LRI   R7(1),X'05'                                              1  05730
000160 17C8      7     1          574          XR    R7,R1                                                    1  05740
000162 983F                00126  575          BCL   NROS03            NOT IPL CMD OR NOT NSC ADDRESS         1  05750
000164 0489      4     0          576          STH   R4,8(R0)          SET INIT IPL CHECK BYTE TO NON ZERO    1  05760
000166 0481      4     0          577          STH   R4,0(R0)          STORE CHCB OF CA WITH IPL CMD          1  05770
000168 A845                00126  578          B     NROS03            BRANCH TO SCAN NEXT CA                 1  05780
```

```
                                                                                                                                  1  05810
                                                                                                                                  1  05820
                                                                                                                                  1  05830
                                                                                                                                  1  05840
                                                                                                                                  1  05850
                                                                                                                                  1  05860
                                                                                                                                  1  05870
                                                                                                                                  1  05880
                                                                                                                                  1  05890
                                                                                                                                  1  05900
                                                                                                                                  1  05910
                                                                                                                                  1  05920

00016A                                                                                                                            1  05940
00016A EF02        7(1,4)     0016E                                                                                               1  05950
00016C AA12                   00380                                                                                               1  05960

C0016E                                                                                                                            1  05980
00016E 8300        3(1)                                                                                                           1  05990
000170 4383        3     4                                                                                                        1  06000

000172                                                                                                                            1  06020
000172 657C        5    67                                                                                                         1  06030
000174 EDB0        5(1,5)     001A6                                                                                               1  06040
000176 8706        7(1)                                                                                                           1  06050
000178 0301        3     0                                                                                                        1  06060
00017A 9857                   00126                                                                                               1  06070

                                                                                                                                  1  06090
                                                                                                                                  1  06100
                                                                                                                                  1  06110
                                                                                                                                  1  06120
                                                                                                                                  1  06130
                                                                                                                                  1  06140
                                                                                                                                  1  06150
                                                                                                                                  1  06160
                                                                                                                                  1  06170

00017C                                                                                                                            1  06190
00017C 8160        1(1)                                                                                                           1  06200
00017E 8000        1(0)                                                                                                           1  06210
000180 6174        1    67                                                                                                        1  06220
000182 820F        3(0)                                                                                                           1  06230
000184 8300        3(1)                                                                                                           1  06240
000186 84F2        5(0)                                                                                                           1  06250
```

```
                                                                                                                                  1  05810
                                                                                                                                  1  05820
                                                                                                                                  1  05830
                                                                                                                                  1  05840
                                                                                                                                  1  05850
                                                                                                                                  1  05860
                                                                                                                                  1  05870
                                                                                                                                  1  05880
                                                                                                                                  1  05890
                                                                                                                                  1  05900
                                                                                                                                  1  05910
                                                                                                                                  1  05920
                                                                                                                                  1  05940
                                                                                                                                  1  05950
                                                                                                                                  1  05960
                                                                                                                                  1  05980
                                                                                                                                  1  05990
                                                                                                                                  1  06000
                                                                                                                                  1  06020
                                                                                                                                  1  06030
                                                                                                                                  1  06040
                                                                                                                                  1  06050
                                                                                                                                  1  06060
                                                                                                                                  1  06070
                                                                                                                                  1  06090
                                                                                                                                  1  06100
                                                                                                                                  1  06110
                                                                                                                                  1  06120
                                                                                                                                  1  06130
                                                                                                                                  1  06140
                                                                                                                                  1  06150
                                                                                                                                  1  06160
                                                                                                                                  1  06170
                                                                                                                                  1  06190
                                                                                                                                  1  06200
                                                                                                                                  1  06210
                                                                                                                                  1  06220
                                                                                                                                  1  06230
                                                                                                                                  1  06240
                                                                                                                                  1  06250
```

```
                                                                                                                                  1  05810
                                                                                                                                  1  05820
                                                                                                                                  1  05830
                                                                                                                                  1  05840
                                                                                                                                  1  05850
                                                                                                                                  1  05860
                                                                                                                                  1  05870
                                                                                                                                  1  05880
                                                                                                                                  1  05890
                                                                                                                                  1  05900
                                                                                                                                  1  05910
                                                                                                                                  1  05920
                                                                                                                                  1  05940
                                                                                                                                  1  05950
                                                                                                                                  1  05960
                                                                                                                                  1  05980
                                                                                                                                  1  05990
                                                                                                                                  1  06000
                                                                                                                                  1  06020
                                                                                                                                  1  06030
                                                                                                                                  1  06040
                                                                                                                                  1  06050
                                                                                                                                  1  06060
                                                                                                                                  1  06070
                                                                                                                                  1  06090
                                                                                                                                  1  06100
                                                                                                                                  1  06110
                                                                                                                                  1  06120
                                                                                                                                  1  06130
                                                                                                                                  1  06140
                                                                                                                                  1  06150
                                                                                                                                  1  06160
                                                                                                                                  1  06170
                                                                                                                                  1  06190
                                                                                                                                  1  06200
                                                                                                                                  1  06210
                                                                                                                                  1  06220
                                                                                                                                  1  06230
                                                                                                                                  1  06240
                                                                                                                                  1  06250
```

```
                                  628 ************************************************************************ 1  06280
                                  629 *                                                                      * 1  06290
                                  630 *                 FIRST  PASS  CODE                                    * 1  06300
                                  631 *                 INTERRUPT HANDLER                                    * 1  06310
                                  632 *                                                                      * 1  06320
                                  633 *   THE FOLLOWING INSTRUCTIONS CHECK FOR LEVEL 1 INTERRUPTS, INITIAL   * 1  06330
                                  634 *   SELECT  INTERRUPTS OR DATA/STATUS LEVEL 3 INTERRUPTS.  IF AN       * 1  06340
                                  635 *   INTERRUPT DOES NOT OCCUR AFTER 13 PASSES, THE CODE TURNS ON THE    * 1  06350
                                  636 *   SELECTED ADAPTERS 'NOT ENABLED' FLAG AND BRANCHES TO SCAN THE      * 1  06360
                                  637 *   NEXT ADAPTER.                                                      * 1  06370
                                  638 *                                                                      * 1  06380
                                  639 ************************************************************************ 1  06390

C00188                            641 NROS09   EQU   *                                                        1  06410
000188 9401      5(0)             642          ARI   R5(0),X'01'        INCREMENT COUNTER                    1  06420
00018A 880C                00198  643          BZL   NROS10             PROGRAM INTERRUPT DID NOT OCCUR      1  06430
C0018C 716C      1    76          644          IN    R1,X'76'           GET L1 INT REQ                       1  06440
00018E E8CC      1(0,5)    001DC  645          BB    R1(0,5),NROS19     BRANCH TO L1 HANDLER                 1  06450
000190 717C      1    77          646          IN    R1,X'77'           GET L3 INT REQ                       1  06460
000192 E928      1(1,4)    001BC  647          BB    R1(1,4),NROS15     BRANCH TO HANDLE INIT SEL L3         1  06470
C00194 D98A      1(1,3)    001A0  648          BB    R1(1,3),NROS11     DATA STATUS L3                       1  06480
000196 A811                00188  649          B     NROS09                                                  1  06490

C00198                            651 NROS10   EQU   *                                                        1  06510
C00198 4503      5     4          652          LH    R5,2(R4)           GET SELECTION/ENABLE CONTROLS        1  06520
00019A 8508      5(1)             653          LRI   R5(1),X'08'        TURN ON 'NOT ENABLED FLAG'           1  06530
00019C 4583      5     4          654          STH   R5,2(R4)           STORE SELECTION/ENABLE CONTROLS      1  06540
00019E A87B                00126  655          B     NROS03             BRANCH TO SCAN NEXT CA               1  06550

                                  657 ************************************************************************ 1  06570
                                  658 *                                                                      * 1  06580
                                  659 * THE FOLLOWING INSTRUCTIONS CHECK FOR THE EXPECTED PROGRAM INTERRUPT * 1  06590
                                  660 *                                                                      * 1  06600
                                  661 ************************************************************************ 1  06610

0001A0                            663 NROS11   EQU   *                                                        1  06630
C001A0 612C      1    62          664          IN    R1,X'62'           GET DATA/STATUS CONTROL              1  06640
0001A2 F8AE      1(0,7)    001D2  665          BB    R1(0,7),NROS17     PROGRAM INTERRUPT BRANCH             1  06650
0001A4 A895                00112  666          B     NROS11A                                                 1  06660
```

```
 LOC  OBJ CODE  R1N1M R2N2 ADDR   STMT   SOURCE STATEMENT

                                  669 ************************************************************************ 1  06690
                                  670 *                                                                      * 1  06700
                                  671 *   THE FOLLOWING INSTRUCTIONS CHECK FOR AN INITIAL SELECT LEVEL 3     * 1  06710
                                  672 *   INTERRUPT.  IF AN INITIAL SELECT LEVEL 3 IS PRESENT ON THE NSC     * 1  06720
                                  673 *   ADDRESS, THE CODE BRANCHES TO HANDLE THE INITIAL SELECT INTERRUPT.* 1  06730
                                  674 *   IF AN INITIAL SELECT IS NOT PRESENT OR THE INITIAL SELECT IS NOT   * 1  06740
                                  675 *   ON THE NSC ADDRESS, CE, DE, UC STATUS IS SET UP IN REG 7 AND THE   * 1  06750
                                  676 *   CODE BRANCHES TO THE 'FIRST PASS CODE.'                            * 1  06760
                                  677 *                                                                      * 1  06770
                                  678 ************************************************************************ 1  06780

0001A6                            680 NROS12   EQU   *                                                        1  06800
C001A6 717C      1    77          681          IN    R1,X'77'          GET INTERRUPT REQUEST                1  06810
0001A8 E904      1(1,4)    001AE  682          BB    R1(1,4),NROS14    INITIAL SELECT L3  BRANCH            1  06820

0001AA                            684 NROS13   EQU   *                                                        1  06840
C001AA 870E      7(1)             685          LRI   R7(1),X'0E'       SET UP CE, DE, UC STATUS             1  06850
C001AC A833                0017C  686          B     NROS08            BRANCH TO FIRST PASS CODE            1  06860

0001AE                            688 NROS14   EQU   *                                                        1  06880
0001AE 611C      1    61          689          IN    R1,X'61'          GET ADDRESS OF SUBCHANNEL            1  06890
C001B0 657C      5    67          690          IN    R5,X'67'          GET NSC ADDRESS                      1  06900
0001B2 8100      1(1)             691          LRI   R1(1),X'00'       CLEAR BYTE 1 OF REG 1                1  06910
0001B4 8500      5(1)             692          LRI   R5(1),X'00'       CLEAR BYTE 1 OF REG 5                1  06920
C001B6 15C8      5     1          693          XR    R5,R1             ARE ADDRESSES EQUAL                  1  06930
0001B8 9811                001AA  694          BCL   NROS13            BRANCH IF NOT EQUAL                  1  06940
0001BA A84C                00208  695          B     NROS21            BRANCH TO HANDLE INIT SELECT L3      1  06950
```

```
 LOC  OBJ CODE  R1N1M R2N2 ADDR   STMT   SOURCE STATEMENT

                                  698 ************************************************************************ 1  06980
                                  699 *                                                                      * 1  06990
                                  700 *              INITIAL SELECT INTERRUPT WHILE IN                       * 1  07000
                                  701 *              'FIRST PASS CODE'                                       * 1  07010
                                  702 *                                                                      * 1  07020
                                  703 *   IF SYSTEM RESET IS PRESENT ON THE SELECTED ADAPTER, THE CODE       * 1  07030
                                  704 *   BRANCHES TO THE INITIAL SELECT CODE.  IF THE INITIAL SELECT IS     * 1  07040
                                  705 *   NOT ON THE NSC ADDRESS , THE INITIAL SELECT INTERRUPT IS           * 1  07050
                                  706 *   RESET AND THE CODE CONTINUES SCANNING FOR THE PROGRAM              * 1  07060
                                  707 *   INTERRUPT.  IF THE INITIAL SELECT IS ON THE NSC ADDRESS, THE       * 1  07070
                                  708 *   CODE BRANCHES TO THE INITIAL SELECT CODE.                          * 1  07080
                                  709 *                                                                      * 1  07090
                                  710 ************************************************************************ 1  07100

0001BC                            712 NROS15   EQU   *                                                        1  07120
0001BC 610C      1    60          713          IN    R1,X'60'          IS SYSTEM RESET?                      1  07130
0001BE F8C8      1(0,7)    00208  714          BB    R1(0,7),NROS21    YES, BRANCH TO INIT SEL HANDLER       1  07140
0001C0 611C      1    61          715          IN    R1,X'61'          GET ADDRESS OF SUBCHANNEL             1  07150
0001C2 657C      5    67          716          IN    R5,X'67'          GET NSC ADDRESS                       1  07160
0001C4 8100      1(1)             717          LRI   R1(1),X'00'       CLEAR BYTE 1 OF REG 1                 1  07170
0001C6 8500      5(1)             718          LRI   R5(1),X'00'       CLEAR BYTE 1 OF REG 5                 1  07180
0001C8 15C8      5     1          719          XR    R5,R1             ARE ADDRESSES EQUAL                   1  07190
0001CA 9802                001CE  720          BCL   NROS16            BRANCH IF NOT EQUAL                   1  07200
0001CC A83A                00208  721          B     NROS21            BRANCH TO INIT SEL L3 HANDLER         1  07210

0001CE                            723 NROS16   EQU   *                                                        1  07230
0001CE 6104      1    60          724          OUT   R1,X'60'          RESET INITIAL SELECT L3               1  07240
0001D0 A84B                00188  725          B     NROS09                                                  1  07250

                                  727 ************************************************************************ 1  07270
                                  728 *                                                                      * 1  07280
                                  729 *   STATUS IS OUTPUTED TO THE SELECTED ADAPTER.                        * 1  07290
                                  730 *                                                                      * 1  07300
                                  731 ************************************************************************ 1  07310

0001D2                            733 NROS17   EQU   *                                                        1  07330
0001D2 6764      7    66          734          OUT   R7,X'66'          OUTPUT STATUS                         1  07340
```

```
  LOC  OBJ CODE  R1N1M R2N2 ADDR   STMT   SOURCE STATEMENT

                                     737 ********************************************************************************* 1  07370
                                     738 *                                                                               * 1  07380
                                     739 *   OUTPUT NSC ADDRESS AND RESET LEVEL 3 INTERRUPT.  BRANCH TO                  * 1  07390
                                     740 *   SCAN NEXT ADAPTER.                                                          * 1  07400
                                     741 *                                                                               * 1  07410
                                     742 ********************************************************************************* 1  07420

0001D4                               744 NROS18   EQU   *                                                               1  07440
0001D4 617C       1    67            745          IN    R1,X'67'          INPUT NSC ADDRESS                          1  07450
0001D6 6134       1    63            746          OUT   R1,X'63'          OUTPUT NSC ADDRESS TO REG 63               1  07460
0001D8 6324       3    62            747          OUT   R3,X'62'          OUTPUT TO RESET LEVEL 3                    1  07470
0001DA A8B7              00126       748          B     NROS03            BRANCH TO SCAN NEXT CA                     1  07480

                                     750 ********************************************************************************* 1  07500
                                     751 *                                                                               * 1  07510
                                     752 *   THE FOLLOWING INSTRUCTIONS HANDLE THE LEVEL 1 INTERRUPTS.                   * 1  07520
                                     753 *   IF THE NSC ADDRESS IS NOT ACTIVE WITH A COMMAND, THE LEVEL 1                * 1  07530
                                     754 *   INTERRUPT IS RESET AND THE CODE BRANCHES TO SCAN THE NEXT ADAPTER.           * 1  07540
                                     755 *                                                                               * 1  07550
                                     756 ********************************************************************************* 1  07560

0001DC                               758 NROS19   EQU   *                                                               1  07580
0001DC 657C       5    67            759          IN    R5,X'67'                                                   1  07590
0001DE ED88       5(1,5)   001E8     760          BB    R5(1,5),L101      IS NSC ACTIVE                              1  07600
0001E0 55C8       5    5             761          XR    R5,R5             CLEAR REG 5                                1  07610
0001E2 8520       5(1)               762          LRI   R5(1),X'20'       SET UP TO RESET CA L1                      1  07620
0001E4 6574       5    67            763          OUT   R5,X'67'          RESET CA L1                                1  07630
0001E6 A8C3              00126       764          B     NROS03            BRANCH TO SCAN NEXT CA                     1  07640
0001E8 4501       5    4             765 L101     LH    R5,0(R4)          GET SELECTED CA FLAGS                      1  07650
0001EA 8401       5(0)               766          LRI   R5(0),X'01'       SET UP SELECTED CA L1 FLAG                 1  07660
0001EC 4581       5    4             767          STH   R5,0(R4)          STORE SELECTED CA FLAGS                    1  07670
0001EE 0101       1    0             768          LH    R1,0(R0)          GET BASE ADDRESS OF CA WITH IPL CMD        1  07680
0001F0 41C8       1    4             769          XR    R1,R4             IPL ON THIS CA                             1  07690
0001F2 8802              001F6       770          BZL   NROS20           IPL IS IN PROGRESS ON THIS CA              1  07700
0001F4 A85F              00198       771          B     NROS10                                                       1  07710

0001F6                               773 NROS20   EQU   *                                                               1  07730
0001F6 0181       1    0             774          STH   R1,0(R0)          SET BASE ADDR OF IPL TO ZERO               1  07740
0001F8 80FB       1(0)               775          LRI   R1(0),X'FB'       SET COUNT TO FF MINUS 4                    1  07750
0001FA 4405       4    4             776 CONTLOOP LH    R4,4(R4)          FETCH CONTROL BLOCK FOR NEXT CA            1  07760
0001FC 9001       1(0)               777          ARI   R1(0),X'01'       INCREMENT COUNTER                          1  07770
0001FE 88DB              00126       778          BZL   NROS03            BRANCH TO SCAN NEXT CA                     1  07780
000200 4303       3    4             779          LH    R3,2(R4)          FETCH SELECTION/ENABLE CONTROLS            1  07790
000202 8308       3(1)               780          LRI   R3(1),X'08'       TURN ON 'NOT ENABLED FLAG'                 1  07800
000204 4383       3    4             781          STH   R3,2(R4)          STORE SELECTION/ENABLE CONTROLS            1  07810
000206 A80F              001FA       782          B     CONTLOOP          BRANCH TO FETCH NEXT CONTROL BLOCK         1  07820
```

```
                                                                                                                                  1  07850
                                                                                                                                  1  07860
                                                                                                                                  1  07870
                                                                                                                                  1  07880
                                                                                                                                  1  07890
                                                                                                                                  1  07900
                                                                                                                                  1  07910
                                                                                                                                  1  07920
                                                                                                                                  1  07930

000208                                                                                                                            1  07950
000208 33C8        3      3                                                                                                       1  07960
C0020A 8206        3(0)                                                                                                          1  07970
C0020C 610C        1     60                                                                                                      1  07980
C0020E F8B0        1(0,7)      00240                                                                                             1  07990
C00210 D832        1(0,2)      00244                                                                                             1  08000
C00212 C88E        1(0,1)      00222                                                                                             1  08010
000214 F843        1(0,6)      001D4                                                                                             1  08020
000216 E8D6        1(0,5)      0026E                                                                                             1  08030
C00218 D8EE        1(0,3)      00288                                                                                             1  08040
00021A C822        1(0,0)      0023E                                                                                             1  08050
00021C 4101        1      4                                                                                                      1  08060
C0021E 8001        1(0)                                                                                                          1  08070
C00220 4181        1      4                                                                                                      1  08080

                                                                                                                                  1  08100
                                                                                                                                  1  08110
                                                                                                                                  1  08120
                                                                                                                                  1  08130
                                                                                                                                  1  08140
                                                                                                                                  1  08150

000222                                                                                                                            1  08170
000222 870E        7(1)                                                                                                          1  08180

000224                                                                                                                            1  08200
C00224 D208        3(0)                                                                                                          1  08210
000226 0101        1      0                                                                                                      1  08220
000228 41C8        1      4                                                                                                      1  08230
00022A 985B                      001D2                                                                                           1  08240
00022C 0181        1      0                                                                                                      1  08250
00022E 80FC        1(0)                                                                                                          1  08260
```

```
                                                                                                                                  1  07850
                                                                                                                                  1  07860
                                                                                                                                  1  07870
                                                                                                                                  1  07880
                                                                                                                                  1  07890
                                                                                                                                  1  07900
                                                                                                                                  1  07910
                                                                                                                                  1  07920
                                                                                                                                  1  07930
                                                                                                                                  1  07950
                                                                                                                                  1  07960
                                                                                                                                  1  07970
                                                                                                                                  1  07980
                                                                                                                                  1  07990
                                                                                                                                  1  08000
                                                                                                                                  1  08010
                                                                                                                                  1  08020
                                                                                                                                  1  08030
                                                                                                                                  1  08040
                                                                                                                                  1  08050
                                                                                                                                  1  08060
                                                                                                                                  1  08070
                                                                                                                                  1  08080
                                                                                                                                  1  08100
                                                                                                                                  1  08110
                                                                                                                                  1  08120
                                                                                                                                  1  08130
                                                                                                                                  1  08140
                                                                                                                                  1  08150
                                                                                                                                  1  08170
                                                                                                                                  1  08180
                                                                                                                                  1  08200
                                                                                                                                  1  08210
                                                                                                                                  1  08220
                                                                                                                                  1  08230
                                                                                                                                  1  08240
                                                                                                                                  1  08250
                                                                                                                                  1  08260
```

```
                                                                                                                                  1  07850
                                                                                                                                  1  07860
                                                                                                                                  1  07870
                                                                                                                                  1  07880
                                                                                                                                  1  07890
                                                                                                                                  1  07900
                                                                                                                                  1  07910
                                                                                                                                  1  07920
                                                                                                                                  1  07930
                                                                                                                                  1  07950
                                                                                                                                  1  07960
                                                                                                                                  1  07970
                                                                                                                                  1  07980
                                                                                                                                  1  07990
                                                                                                                                  1  08000
                                                                                                                                  1  08010
                                                                                                                                  1  08020
                                                                                                                                  1  08030
                                                                                                                                  1  08040
                                                                                                                                  1  08050
                                                                                                                                  1  08060
                                                                                                                                  1  08070
                                                                                                                                  1  08080
                                                                                                                                  1  08100
                                                                                                                                  1  08110
                                                                                                                                  1  08120
                                                                                                                                  1  08130
                                                                                                                                  1  08140
                                                                                                                                  1  08150
                                                                                                                                  1  08170
                                                                                                                                  1  08180
                                                                                                                                  1  08200
                                                                                                                                  1  08210
                                                                                                                                  1  08220
                                                                                                                                  1  08230
                                                                                                                                  1  08240
                                                                                                                                  1  08250
                                                                                                                                  1  08260
```

```
 LOC  OBJ CODE  R1N1M R2N2 ADDR   STMT   SOURCE STATEMENT

000230                                 829 NROS24   EQU   *                                                  1  08290
000230 4405       4     4              830          LH    R4,4(R4)          FETCH CONTROL BLOCK FOR NEXT CA    1  08300
000232 9001       1(0)                 831          ARI   R1(0),X'01'       INCREMENT COUNTER                  1  08310
000234 8865                  001D2     832          BZL   NROS17            BRANCH TO OUTPUT STATUS            1  08320
C00236 4503       5     4              833          LH    R5,2(R4)          FETCH SELECTION/ENABLE CONTROLS    1  08330
000238 8508       5(1)                 834          LRI   R5(1),X'08'       TURN ON 'NOT ENABLED FLAG'         1  08340
00023A 4583       5     4              835          STH   R5,2(R4)          STORE SELECTION/ENABLE CONTROLS    1  08350
C0023C A80F                  00230     836          B     NROS24            BRANCH TO FETCH NEXT CONTROL BLCCK 1  08360
00023E A866                  002A6     837 NSELBRPT B     NROS35            BRANCH                             1  08370

                                       839 ************************************************************************* 1  08390
                                       840 *                                                                     * 1  08400
                                       841 *    THE FOLLOWING INSTRUCTIONS HANDLE THE SYSTEM RESET OR SELECTIVE  * 1  08410
                                       842 *    RESET WHICH OCCURS ON AN INITIAL SELECTION.  ALSO, COMMON CODE   * 1  08420
                                       843 *    IS USED TO HANDLE THE SELECTIVE RESET FROM THE LEVEL 3           * 1  08430
                                       844 *    INTERRUPT HANDLER.                                               * 1  08440
                                       845 *                                                                     * 1  08450
                                       846 ************************************************************************* 1  08460

000240                                 848 NROS25   EQU   *                                                  1  08480
000240 11C8       1     1              849          XR    R1,R1             CLEAR REG 1                        1  08490
000242 6124       1    62              850          OUT   R1,X'62'                                              1  08500

000244                                 852 NROS26   EQU   *                                                  1  08520
C00244 11C8       1     1              853          XR    R1,R1             CLEAR REG 1                        1  08530
000246 8110       1(1)                 854          LRI   R1(1),X'10'       SET UP TO RESET SYS RESET          1  08540
000248 6174       1    67              855          OUT   R1,X'67'          OUTPUT TO RESET SYS RESET          1  08550
C0024A 11C8       1     1              856          XR    R1,R1             CLEAR REG 1                        1  08560
C0024C 8004       1(0)                 857          LRI   R1(0),X'04'       SET UP TO RESET INIT SEL L3        1  08570

00024E                                 859 NROS27   EQU   *                                                  1  08590
00024E 6124       1    62              860          OUT   R1,X'62'          RESET INIT SEL L3 OR DATA/STATUS L3 1  08600
000250 4101       1     4              861          LH    R1,0(R4)          GET BOC AND L1 FLAGS               1  08610
C00252 8000       1(0)                 862          LRI   R1(0),X'00'       RESET BOC AND L1 FLAGS             1  08620
000254 4181       1     4              863          STH   R1,0(R4)          STORE UPDATED BOC AND L1 FLAGS     1  08630

000256                                 865 NROS28   EQU   *                                                  1  08650
000256 0101       1     0              866          LH    R1,0(R0)          GET IPL BASE ADDRESS               1  08660
000258 41C8       1     4              867          XR    R1,R4             IS IPL IN PROGRESS ON THIS CA ?    1  08670
00025A 9937                  00126     868          BCL   NROS03            IPL IS NOT IN PROGRESS ON THIS CA  1  08680
00025C 0181       1     0              869          STH   R1,0(R0)          ZERO OUT IPL BASE ADDRESS          1  08690
00025E 80FC       1(0)                 870          LRI   R1(0),X'FC'       SET COUNT TO FF MINUS 3            1  08700
```

```
 LOC  OBJ CODE  R1N1M R2N2 ADDR   STMT   SOURCE STATEMENT                                                    1  08730
000260                                    873 NROS29   EQU   *                                                1  08740
000260 4405       4     4                 874          LH    R4,4(R4)          FETCH CONTROL BLOCK FOR NEXT CA 1  08750
000262 9001       1(0)                    875          ARI   R1(0),X'01'       INCREMENT COUNTER               1  08760
000264 8941                         00126 876          BZL   NROS03            BRANCH IF ROUTINE COMPLETED     1  08770
000266 4303       3     4                 877          LH    R3,2(R4)          FETCH SELECTION/ENABLE CONTROLS 1  08780
000268 8308       3(1)                    878          LRI   R3(1),X'08'       TURN ON 'NOT ENABLED FLAG'      1  08790
00026A 4383       3     4                 879          STH   R3,2(R4)          STORE SELECTION/ENABLE CONTROLS 1  08800
00026C A80F                         00260 880          B     NROS29            BRANCH TO FETCH NEXT CONTROL BLOCK 1 08810
                                          882 ************************************************************** 1  08820
                                          883 *                                                            * 1  08830
                                          884 *    THE FOLLOWING INSTRUCTIONS HANDLE STACKED INITIAL STATUS * 1  08840
                                          885 *    ON AN INITIAL SELECTION.                                * 1  08850
                                          886 *                                                            * 1  08860
                                          887 ************************************************************** 1  08870
00026E                                    889 NROS30   EQU   *                                                1  08890
00026E D88A       1(0,3)          0027A   890          BB    R1(0,3),NROS31    BUS OUT CHECK                   1  08900
000270 611C       1     61                891          IN    R1,X'61'          INPUT CMD                       1  08910
000272 F1FF       1(1)                    892          TRM   R1(1),X'FF'       TEST FOR TEST I/O CMD           1  08920
000274 880E                         00284 893          BZL   NROS32            BRANCH DUE TO TEST I/O CMD      1  08930
000276 870C       7(1)                    894          LRI   R7(1),X'0C'       NO-OP CMD, SET CE AND DE STATUS 1  08940
000278 A857                         00224 895          B     NROS23            BRANCH TO SET FINAL STATUS STATE 1 08950
C0027A                                    897 NROS31   EQU   *                                                1  08970
00027A 8702       7(1)                    898          LRI   R7(1),X'02'       SET UP UNIT CHECK STATUS        1  08980
00027C 4101       1     4                 899          LH    R1,0(R4)          GET BOC AND L1 FLAGS            1  08990
00027E 8002       1(0)                    900          LRI   R1(0),X'02'       SET UP BOC FLAG                 1  09000
000280 4181       1     4                 901          STH   R1,0(R4)          STORE BOC AND L1 FLAGS          1  09010
000282 A861                         00224 902          B     NROS23            BRANCH TO SET FINAL STATUS STATE 1 09020
000284                                    904 NROS32   EQU   *                                                1  09040
C00284 D208       3(0)                    905          ORI   R3(0),X'08'       SET FINAL STATUS SEQUENCE       1  09050
000286 A8B5                         001D4 906          B     NROS18                                            1  09060
```

```
LOC  OBJ CODE  R1N1M R2N2 ADDR   STMT   SOURCE STATEMENT

                                  909 ************************************************************************ 1  09090
                                  910 *                                                                      * 1  09100
                                  911 *    THE FOLLOWING INSTRUCTIONS HANDLE BUS OUT CHECKS WHICH            * 1  09110
                                  912 *    OCCUR ON INITIAL SELECTION.                                       * 1  09120
                                  913 *                                                                      * 1  09130
                                  914 ************************************************************************ 1  09140

000288                            916 NROS33   EQU   *                                                         1  09160
000288 4101      1     4           917          LH    R1,0(R4)          GET BOC AND L1 FLAGS                  1  09170
00028A 8002      1(0)              918          LRI   R1(0),X'02'       SET UP BOC FLAG                       1  09180
00028C 4181      1     4           919          STH   R1,0(R4)          STORE BOC AND L1 FLAGS                1  09190
00028E 0501      5     0           920          LH    R5,0(R0)          GET IPL BASE ADDRESS                  1  09200
000290 45C8      5     4           921          XR    R5,R4             IS IPL IN PROGRESS ON THIS CA         1  09210
000292 98C1                001D4   922          BCL   NROS18            IPL IS NOT IN PROGRESS ON THIS CA     1  09220
000294 0581      5     0           923          STH   R5,0(R0)          ZERO OUT IPL BASE ADDRESS             1  09230
000296 80FC      1(0)              924          LRI   R1(0),X'FC'       SET COUNT TO FF MINUS 3               1  09240

000298                            926 NROS34   EQU   *                                                         1  09260
000298 4405      4     4           927          LH    R4,4(R4)          FETCH CONTROL BLOCK FOR NEXT CA       1  09270
00029A 9001      1(0)              928          ARI   R1(0),X'01'       INCREMENT COUNTER                     1  09280
00029C 88CB                001D4   929          BZL   NROS18                                                  1  09290
00029E 4503      5     4           930          LH    R5,2(R4)          FETCH SELECTION/ENABLE CONTROLS       1  09300
0002A0 8508      5(1)              931          LRI   R5(1),X'08'       TURN ON 'NOT ENABLED FLAG'            1  09310
0002A2 4583      5     4           932          STH   R5,2(R4)          STORE SELECTION/ENABLE CONTROLS       1  09320
0002A4 A80F                00298   933          B     NROS34            BRANCH TO FETCH NEXT CONTROL BLOCK    1  09330

                                  935 ************************************************************************ 1  09350
                                  936 *                                                                      * 1  09360
                                  937 *    THE FOLLOWING INSTRUCTIONS HANDLE NORMAL INITIAL SELECTION.       * 1  09370
                                  938 *    THE COMMAND IS CHECKED TO DETERMINE IF A VALID COMMAND HAS        * 1  09380
                                  939 *    BEEN RECEIVED.  THE CODE BRANCHES TO HANDLE AN IPL COMMAND        * 1  09390
                                  940 *    OR A SENSE COMMAND.                                               * 1  09400
                                  941 *                                                                      * 1  09410
                                  942 ************************************************************************ 1  09420

0002A6                            944 NROS35   EQU   *                                                         1  09440
0002A6 611C      1    61           945          IN    R1,X'61'          FETCH CMD                             1  09450
0002A8 80FF      1(0)              946          LRI   R1(0),X'FF'       CONDITION BYTE 0 FOR OVERFLOW         1  09460
0002AA 91F6      1(1)              947          ARI   R1(1),X'F6'       ADDITION OF F6 SO THAT ANY COMMAND    1  09470
                                  948 *                                 OF 0A OR GREATER WILL CAUSE A CARRY   1  09480
0002AC 9812                002C0   949          BCL   NROS36            BRANCH IF COMMAND NOT VALID FOR       1  09490
                                  950 *                                 SINGLE SUBCHANNEL ADDRESS             1  09500
0002AE 9101      1(1)              951          ARI   R1(1),X'01'       CHECK FOR COMMAND X'09'               1  09510
0002B0 9891                00222   952          BCL   NROS22            BRANCH IF WRITE BREAK POINT COMMAND   1  09520
0002B2 9103      1(1)              953          ARI   R1(1),X'03'       CHECK FOR X'06', X'07' OR X'08'       1  09530
0002B4 980A                002C0   954          BCL   NROS36            COMMAND NOT VALID                     1  09540
0002B6 9101      1(1)              955          ARI   R1(1),X'01'       IPL CMD WILL CAUSE A CARRY            1  09550
0002B8 980E                002C8   956          BCL   NROS37            BRANCH IF IPL COMMAND                 1  09560
0002BA 9101      1(1)              957          ARI   R1(1),X'01'       SENSE CMD WILL CAUSE A CARRY          1  09570
0002BC 981A                002D8   958          BCL   NROS38            BRANCH IF SENSE COMMAND               1  09580
0002BE A89F                00222   959          B     NROS22                                                  1  09590
```

```
 LOC  OBJ CODE  R1N1M R2N2 ADDR   STMT   SOURCE STATEMENT

0002C0                                 NROS36   EQU   *                                                  1  09620
0002C0 4101       1     4                        LH    R1,0(R4)          GET  CMD REJ, L1 AND BOC FLAGS   1  09630
0002C2 8004       1(0)                           LRI   R1(0),X'04'       SET UP CMD REJ FLAG              1  09640
0002C4 4181       1     4                        STH   R1,0(R4)          STORE FLAGS                      1  09650
0002C6 A8A7                  00222                B     NROS22                                             1  09660

                                       ************************************************************************ 1  09680
                                       *                                                                      * 1  09690
                                       *    THE FOLLOWING INSTRUCTICNS HANDLE THE IPL COMMAND.  AN INBOUND   * 1  09700
                                       *    DATA TRANSFER IS SET UP WITH COUNT = 2.                          * 1  09710
                                       *                                                                      * 1  09720
                                       ************************************************************************ 1  09730

0002C8                                 NROS37   EQU   *                                                  1  09750
0002C8 0481       4     0                        STH   R4,0(R0)          STORE SELECTED CA AS IPL BASE ADDR 1  09760
0002CA 8404       5(0)                           LRI   R5(0),X'04'       SET START ADDRESS                1  09770
0002CC 8500       5(1)                           LRI   R5(1),X'00'                                        1  09780
0002CE 5583       5     5                        STH   R5,2(R5)          STORE BAD COUNT AT LOCATION X'402' 1  09790
0002D0 058D       5     0                        STH   R5,12(RC)         STORE ADDRESS COUNTER AT X'70C'  1  09800
0002D2 D240       3(0)                           ORI   R3(0),X'40'       SET UP INBOUND DATA XFER         1  09810
0002D4 8302       3(1)                           LRI   R3(1),X'02'       COUNT=2                          1  09820
0002D6 A905                  001D4                B     NROS18                                             1  09830

                                       ************************************************************************ 1  09850
                                       *                                                                      * 1  09860
                                       *    THE FOLLOWING INSTRUCTICNS HANDLE THE SENSE COMMAND.             * 1  09870
                                       *    THE SENSE BYTE IS SET UP AS DETERMINED BY THE SENSE FLAGS.       * 1  09880
                                       *    THE SENSE BYTE IS OUTPUTTED AND OUTBOUND TRANSFER IS SET         * 1  09890
                                       *    UP WITH COUNT EQUAL 1.                                           * 1  09900
                                       *                                                                      * 1  09910
                                       ************************************************************************ 1  09920

0002D8                                 NROS38   EQU   *                                                  1  09940
0002D8 4101       1     4                        LH    R1,0(R4)          GET L1 AND BOC FLAGS             1  09950
0002DA F888       1(0,7)     002E4                BB    R1(0,7),NROS39    BRANCH IF L1 FLAG IS ACTIVE      1  09960
0002DC F80A       1(0,6)     002E8                BB    R1(0,6),NROS40    BRANCH IF BOC FLAG IS ACTIVE     1  09970
0002DE E88C       1(0,5)     002EC                BB    R1(0,5),NROS41    BRANCH IF CMD REJ FLAG IS ACTIVE 1  09980
0002E0 8602       7(0)                           LRI   R7(0),X'02'       SET UP IPL REQUIRED SENSE        1  09990
0002E2 A80A                  002EE                B     NROS42                                             1  10000

0002E4                                 NROS39   EQU   *                                                  1  10020
0002E4 8612       7(0)                           LRI   R7(0),X'12'       SET UP EQUIP CHECK AND IPL REQUIRED 1  10030
0002E6 A806                  002EE                B     NROS42                                             1  10040

0002E8                                 NROS40   EQU   *                                                  1  10060
0002E8 8622       7(0)                           LRI   R7(0),X'22'       SET UP BUS OUT CHECK AND IPL REQ 1  10070
0002EA A802                  002EE                B     NROS42                                             1  10080
```

```
 LOC  OBJ CODE  R1N1M R2N2 ADDR   STMT   SOURCE STATEMENT

0002EC                           1011 NROS41   EQU   *                                                  1  10110
0002EC 8682      7(0)            1012          LRI   R7(0),X'82'        SET UP CMD REJ AND IPL REQUIRED   1  10120

0002EE                           1014 NROS42   EQU   *                                                  1  10140
C002EE 6744      7    64         1015          OUT   R7,X'64'           OUTPUT SENSE BYTE                 1  10150
0002F0 D280      3(0)            1016          ORI   R3(0),X'80'        SET UP OUTBOUND XFER              1  10160
0002F2 8301      3(1)            1017          LRI   R3(1),X'01'        SET UP COUNT EQUAL 1              1  10170
C002F4 8000      1(0)            1018          LRI   R1(C),X'C0'        TURN OFF BOC OR L1 FLAG           1  10180
C002F6 4181      1     4         1019          STH   R1,0(R4)           STORE L1 AND BOC FLAGS            1  10190
0002F8 A927                001D4 1020          B     NROS18                                              1  10200

                                 1022 ************************************************************************ 1  10220
                                 1023 *                                                                    * 1  10230
                                 1024 *              DATA/STATUS LEVEL 3 INTERRUPT HANDLER                 * 1  10240
                                 1025 *                                                                    * 1  10250
                                 1026 *   THE FOLLOWING INSTRUCTIONS CHECK FOR LEVEL 1 INTERRUPTS,         * 1  10260
                                 1027 *   INITIAL SELECT LEVEL 3 INTERRUPTS AND DATA/STATUS LEVEL 3        * 1  10270
                                 1028 *   INTERRUPTS.  THE EXPECTED INTERRUPT IS THE DATA/STATUS LEVEL 3.  * 1  10280
                                 1029 *                                                                    * 1  10290
                                 1030 ************************************************************************ 1  10300

0002FA                           1032 NROS43   EQU   *                                                  1  10320
C002FA 716C      1    76         1033          IN    R1,X'76'           GET L1 INTERRUPT REQUEST          1  10330
C002FC E88A      1(0,5)   00308  1034          BB    R1(0,5),L1BRPT     BRANCH TO L1 HANDLER              1  10340
0002FE 717C      1    77         1035          IN    R1,X'77'           GET L3 INTERRUPT REQUEST          1  10350
C00300 E908      1(1,4)   0030A  1036          BB    R1(1,4),BBRPT      BRANCH TO HANDLE INIT SEL L3      1  10360
000302 D98A      1(1,3)   0030E  1037          BB    R1(1,3),NROS44     BRANCH TO HANDLE DATA/STATUS L3   1  10370
000304 A9E1               00126  1038          B     NROS03             BRANCH TO SCAN NEXT CA            1  10380
000306 A885               00284  1039 TESTIO1  B     NROS32                                              1  10390
C00308 A92F               001DC  1040 L1BRPT   B     NROS19                                              1  10400
00030A A905               00208  1041 BBRPT    B     NROS21                                              1  10410
00030C A93B               001D4  1042 F1BRPT   B     NROS18                                              1  10420
```

```
 LOC  OBJ CODE  R1N1M R2N2 ADDR   STMT   SOURCE STATEMENT

                                  1045 ************************************************************************ 1  10450
                                  1046 *                                                                      * 1  10460
                                  1047 *          CONTINUATION OF DATA/STATUS LEVEL 3                         * 1  10470
                                  1048 *          INTERRUPT HANDLER                                           * 1  10480
                                  1049 *                                                                      * 1  10490
                                  1050 *    THE FOLLOWING INSTRUCTIONS DETERMINE THE REASON FOR THE           * 1  10500
                                  1051 *    DATA/STATUS LEVEL 3 INTERRUPT.                                    * 1  10510
                                  1052 *                                                                      * 1  10520
                                  1053 ************************************************************************ 1  10530

00030E                            1055 NROS44   EQU   *                                                        1  10550
00030E 8202      3(0)             1056          LRI   R3(0),X'02'        SET UP DATA/STATUS SERVICE RESET      1  10560
C00310 612C      1    62          1057          IN    R1,X'62'                                                 1  10570
C00312 C99A      1(1,1)    0032E  1058          BB    R1(1,1),NROS47     BRANCH IF SELECTIVE RESET             1  10580
000314 D991      1(1,3)    00306  1059          BB    R1(1,3),TESTIC1    BRANCH IF STATUS STACKED              1  10590
000316 E8C8      1(0,5)    00360  1060          BB    R1(0,5),NROS51     BRANCH IF CHAN STOP OR INTERFACE DIS  1  10600
C00318 C920      1(1,0)    0033A  1061          BB    R1(1,0),NROS48     BRANCH IF BUS OUT CHECK               1  10610
00031A E811      1(0,4)    0030C  1062          BB    R1(0,4),F1BRPT     BRANCH DUE TO FINAL STATUS TAKEN      1  10620
00031C C8A4      1(0,1)    00342  1063          BB    R1(0,1),NROS49     BRANCH IF INBOUND XFER SEQUENCE       1  10630
C0031E 0101      1     0          1064          LH    R1,C(R0)           GET IPL BASE ADDRESS                  1  10640
000320 8804                00326  1065          BZL   NROS45             BRANCH IF IPL IS NOT IN PROGRESS      1  10650
000322 41C8      1     4          1066          XR    R1,R4              COMPARE IPL ADDRESS WITH SELECTED CA  1  10660
000324 9804                0032A  1067          BCL   NROS46             IPL IS IN PROGRESS ON ANOTHER CA      1  10670

                                  1069 ************************************************************************ 1  10690
                                  1070 *                                                                      * 1  10700
                                  1071 *     THE FOLLOWING INSTRUCTIONS SET UP FINAL STATUS FOR               * 1  10710
                                  1072 *     THE SENSE COMMAND.                                               * 1  10720
                                  1073 *                                                                      * 1  10730
                                  1074 ************************************************************************ 1  10740

000326                            1076 NROS45   EQU   *                                                        1  10760
C00326 870C      7(1)             1077          LRI   R7(1),X'0C'        SET UP CE, DE STATUS                  1  10770
000328 A907                00224  1078          B     NROS23                                                   1  10780

C0032A                            1080 NROS46   EQU   *                                                        1  10800
00032A 870D      7(1)             1081          LRI   R7(1),X'0D'        SET UP CE, DE, UE STATUS              1  10810
00032C A90B                00224  1082          B     NROS23                                                   1  10820

                                  1084 ************************************************************************ 1  10840
                                  1085 *                                                                      * 1  10850
                                  1086 *     THE FOLLOWING INSTRUCTIONS HANDLE SELECTIVE RESET DURING         * 1  10860
                                  1087 *     DATA/STATUS LEVEL 3 INTERRUPT.                                   * 1  10870
                                  1088 *                                                                      * 1  10880
                                  1089 ************************************************************************ 1  10890

00032E                            1091 NROS47   EQU   *                                                        1  10910
00032E 11C8      1     1          1092          XR    R1,R1              CLEAR REG 1                           1  10920
000330 8110      1(1)             1093          LRI   R1(1),X'10'        SET UP TO RESET SYS RESET/NSC ACTIVE  1  10930
000332 6174      1    67          1094          OUT   R1,X'67'           OUTPUT TO RESET SYS RESET/NSC ACTIVE  1  10940
000334 11C8      1     1          1095          XR    R1,R1              CLEAR REG 1                           1  10950
000336 8002      1(0)             1096          LRI   R1(0),X'02'        SET UP TO RESET DATA/STATUS L3        1  10960
C00338 A8ED                0024E  1097          B     NROS27             BRANCH TO RESET DATA/STATUS L3        1  10970
```

```
 LOC  OBJ CODE  R1N1M R2N2 ADDR   STMT   SOURCE STATEMENT

                                 1100 ********************************************************************************* 1  11000
                                 1101 *                                                                               * 1  11010
                                 1102 *     THE FOLLOWING INSTRUCTIONS HANDLE BUS OUT CHECKS DURING                   * 1  11020
                                 1103 *     DATA/STATUS LEVEL 3 INTERRUPTS.                                           * 1  11030
                                 1104 *                                                                               * 1  11040
                                 1105 ********************************************************************************* 1  11050

00033A                           1107 NROS48   EQU   *                                                                 1  11070
00033A 4101      1     4         1108         LH    R1,0(R4)           GET BOC AND L1 FLAGS                          1  11080
00033C 8002      1(0)             1109         LRI   R1(0),X'02'        SET UP BOC FLAG                               1  11090
00033E 4181      1     4         1110         STH   R1,0(R4)           STORE FLAGS                                   1  11100
000340 A921                00222 1111         B     NROS22             BRANCH TO PRESENT CE, DE, UC STATUS           1  11110

                                 1113 ********************************************************************************* 1  11130
                                 1114 *                                                                               * 1  11140
                                 1115 *     THE FOLLOWING INSTRUCTIONS HANDLE THE INBOUND DATA TRANSFER.              * 1  11150
                                 1116 *     THE BYTE COUNT IS CHECKED.  TWO BYTES OF DATA ARE STORED.                 * 1  11160
                                 1117 *     INBOUND DATA TRANSFER IS SET UP WITH COUNT EQUAL 2.                       * 1  11170
                                 1118 *                                                                               * 1  11180
                                 1119 ********************************************************************************* 1  11190

000342                           1121 NROS49   EQU   *                                                                 1  11210
000342 0101      1     0         1122         LH    R1,0(R0)           GET IPL BASE ADDRESS                          1  11220
000344 41C8      1     4         1123         XR    R1,R4              COMPARE WITH SELECTED CA                      1  11230
000346 9927                00222 1124         BCL   NROS22             IPL IS NOT IN PROGRESS ON THIS CA             1  11240
000348 050D      5     0         1125         LH    R5,12(R0)          GET BYTE COUNT                                1  11250
00034A EC0E      5(0,4)     0035A 1126         BB    R5(0,4),NROS5C     MAXIMUM COUNT EXCEEDED                        1  11260
00034C 614C      1     64        1127         IN    R1,X'64'           PUT INBOUND DATA IN REG 1                     1  11270
00034E 5181      1     5         1128         STH   R1,0(R5)           STORE TWO BYTES                               1  11280
000350 9502      5(1)             1129         ARI   R5(1),X'02'        INCREMENT STORAGE ADDRESS BY 2                1  11290
000352 058D      5     0         1130         STH   R5,12(RC)          STORE BYTE COUNT                              1  11300
000354 D240      3(0)             1131         ORI   R3(0),X'40'        SET UP INBOUND DATA TRANSFER                  1  11310
000356 8302      3(1)             1132         LRI   R3(1),X'02'        COUNT=2                                       1  11320
000358 A987                001D4 1133         B     NROS18                                                           1  11330

                                 1135 ********************************************************************************* 1  11350
                                 1136 *                                                                               * 1  11360
                                 1137 *     THE FOLLOWING INSTRUCTIONS TERMINATE THE INBOUND DATA TRANSFER            * 1  11370
                                 1138 *     IF A BAD COUNT HAS BEEN RECEIVED.  THAT IS, IF THE EXPECTED               * 1  11380
                                 1139 *     COUNT DID NOT EQUAL THE ACTUAL COUNT OR THE MAXIMUM ALLOWED               * 1  11390
                                 1140 *     COUNT IS EXCEEDED.  A FINAL STATUS OF CE,DE,UC,UE IS SET UP.              * 1  11400
                                 1141 *                                                                               * 1  11410
                                 1142 ********************************************************************************* 1  11420

00035A                           1144 NROS50   EQU   *                                                                 1  11440
00035A 11C8      1     1         1145         XR    R1,R1              CLEAR REG 1                                   1  11450
00035C 870F      7(1)             1146         LRI   R7(1),X'0F'        SET UP CE, DE UC, UE STATUS                   1  11460
00035E A93D                00224 1147         B     NROS23             BRANCH TO PRESENT STATUS                      1  11470
```

```
LOC  OBJ CODE  R1N1M R2N2 ADDR   STMT   SOURCE STATEMENT

                                  1150 ************************************************************************ 1  11500
                                  1151 *                                                                      * 1  11510
                                  1152 *    THE FOLLOWING INSTRUCTICNS HANDLE CHANNEL STOP OR                 * 1  11520
                                  1153 *    INTERFACE DISCONNECT.                                             * 1  11530
                                  1154 *                                                                      * 1  11540
                                  1155 ************************************************************************ 1  11550

000360                            1157 NROS51   EQU   *                                                        1  11570
000360 C882      1(0,1)    00364  1158          BB    R1(0,1),NROS52      BRANCH IF INBOUND XFER SEQUENCE      1  11580
000362 A943                00222  1159          B     NROS22              BRANCH TO PRESENT CE, DE, UC STATUS  1  11590

                                  1161 ************************************************************************ 1  11610
                                  1162 *                                                                      * 1  11620
                                  1163 *            PASS CONTROL TC LOADED MODULE                             * 1  11630
                                  1164 *                                                                      * 1  11640
                                  1165 *   THE FCLLCWING INSTRUCTICNS DO A COUNT COMPARE, RESET IPL LEVEL 1   * 1  11650
                                  1166 *   AND BRANCH TO START OF LCADED MODULE.                              * 1  11660
                                  1167 *                                                                      * 1  11670
                                  1168 ************************************************************************ 1  11680

000364                            1170 NROS52   EQU   *                                                        1  11700
000364 8C04      1(0)             1171          LRI   R1(0),X'04'         LOAD ADDRESS OF BYTE COUNT           1  11710
C00366 8102      1(1)             1172          LRI   R1(1),X'02'                                              1  11720
000368 1101      1     1          1173          LH    R1,0(R1)            PUT BYTE COUNT IN REG 1              1  11730
00036A 9004      1(0)             1174          ARI   R1(0),X'04'         ADD X'400' TO BYTE COUNT             1  11740
00036C 050D      5     0          1175          LH    R5,12(R0)           GET ACTUAL BYTE COUNT                1  11750
C0036E 51C8      1     5          1176          XR    R1,R5               COMPARE EXPECTED AND ACTUAL BYTE CNT 1  11760
000370 9819                0035A  1177          BCL   NROS50              BRANCH TO PRESENT CE, DE, UC,UE      1  11770
000372 80C0      1(0)             1178          LRI   R1(0),X'C0'         SET UP RESET OF IPL L1 & CCU CHECK   1  11780
000374 7174      1    77          1179          OUT   R1,X'77'            RESET IPL L1 AND RESET NOT INITIALIZ 1  11790
000376 8012      1(0)             1180          LRI   R1(0),X'12'         SET UP CE STATUS TRANSFER            1  11800
000378 6124      1    62          1181          OUT   R1,X'62'            CHANNEL END STATUS TRANSFER SEQUENCE 1  11810
C0037A 8204      3(0)             1182          LRI   R3(0),X'04'         SET UP BRANCH TO MODULE THAT         1  11820
C0037C 8304      3(1)             1183          LRI   R3(1),X'04'         WAS LOADED                           1  11830
C0037E 003C      0    03          1184          IN    R0,X'03'            BRANCH TO MODULE                     1  11840

                                  1186 ************************************************************************   1  11860
                                  1187 *                                                                      *   1  11870
                                  1188 *          RESET INTERRUPTS CN DISABLED ADAPTERS                       *   1  11880
                                  1189 *                                                                      *   1  11890
                                  1190 ************************************************************************   1  11900

000380                            1192 NROS05A  EQU   *                                                        1  11920
000380 8000      1(0)             1193          LRI   R1(0),X'00'         SET UP OUTPUT 67                     1  11930
000382 8130      1(1)             1194          LRI   R1(1),X'30'         SET UP OUTPUT 67                     1  11940
C00384 8406      5(0)             1195          LRI   R5(0),X'06'         SET UP OUTPUT 62                     1  11950
000386 8500      5(1)             1196          LRI   R5(1),X'00'         SET UP OUTPUT 62                     1  11960
C00388 677C      7    67          1197          IN    R7,X'67'            CHECK FOR ENABLED ADAPTER            1  11970
00038A EF06      7(1,4)    00392  1198          BB    R7(1,4),BRPT06      SET UP BRANCH TO NROS06 IF ENABLED   1  11980
00038C 6174      1    67          1199          OUT   R1,X'67'            RESET LEVEL 1 OR SYS RST INTERRUPTS  1  11990
00038E 6524      5    62          1200          OUT   R5,X'62'            RESET INIT SEL OR DATA STATUS        1  12000
C00390 AA6D                00126  1201          B     NROS03              BRANCH TO SCAN NEXT CA               1  12010
000392 AA27                0016E  1202 BRPT06   B     NROS06              CA ENABLED, BRANCH TO NROS06         1  12020
```

```
LOC  OBJ CODE  R1N1M R2N2 ADDR   STMT   SOURCE STATEMENT

                                 1205 ************************************************************************ 1  12050
                                 1206 *                                                                      * 1  12060
                                 1207 *                CHANNEL CONTROL BLOCKS                                * 1  12070
                                 1208 *                                                                      * 1  12080
                                 1209 *   THE FOLLOWING INSTRUCTIONS SET UP CHANNEL CONTROL BLOCKS WHICH     * 1  12090
                                 1210 *   ARE USED BY THE ROS PROGRAM.  EACH OF THE ADAPTERS HAS A CHANNEL   * 1  12100
                                 1211 *   CONTROL BLOCK WHICH CONTAINS 3 HALFWORDS.  THE FIRST BYTE CONTAINS* 1  12110
                                 1212 *   FLAGS FOR EQUIPMENT CHECK (BIT 7), BUS OUT CHECK (BIT 6), COMMAND * 1  12120
                                 1213 *   REJECT (BIT 5).  THE SECOND BYTE IS A SELECTION MASK USED TO       * 1  12130
                                 1214 *   CHECK FOR PROPER ADAPTER SELECTION.  BYTES 3 AND 4 ARE THE         * 1  12140
                                 1215 *   SELECTION/ENABLE CONTROLS.  BYTES 5 AND 6 ARE POINTERS WHICH       * 1  12150
                                 1216 *   POINT TO THE NEXT SEQUENTIAL CHANNEL CONTROL BLOCK.                * 1  12160
                                 1217 *                                                                      * 1  12170
                                 1218 ************************************************************************ 1  12180

0003E8                           1220          ORG   ZERO+X'03E8'       CA 1 CONTROL BLOCK                   1  12200
0003E8 0000                      1221          DC    X'0000'                                                 1  12210
0003EA                           1222          ORG   ZERO+X'03EA'                                            1  12220
0003EA 0408                      1223          DC    X'0408'                                                 1  12230
0003EC                           1224          ORG   ZERO+X'03EC'                                            1  12240
0003EC 03EE                      1225          DC    X'03EE'                                                 1  12250
0003EE                           1226          ORG   ZERO+X'03EE'       CA 2 CONTROL BLOCK                   1  12260
0003EE 0002                      1227          DC    X'0002'                                                 1  12270
0003F0                           1228          ORG   ZERO+X'03F0'                                            1  12280
0003F0 0508                      1229          DC    X'0508'                                                 1  12290
0003F2                           1230          ORG   ZERO+X'03F2'                                            1  12300
0003F2 03F4                      1231          DC    X'03F4'                                                 1  12310
0003F4                           1232          ORG   ZERO+X'03F4'       CA 3 CONTROL BLOCK                   1  12320
0003F4 0004                      1233          DC    X'0004'                                                 1  12330
0003F6                           1234          ORG   ZERO+X'03F6'                                            1  12340
0003F6 0608                      1235          DC    X'0608'                                                 1  12350
0003F8                           1236          ORG   ZERO+X'03F8'                                            1  12360
0003F8 03FA                      1237          DC    X'03FA'                                                 1  12370
0003FA                           1238          ORG   ZERO+X'03FA'       CA 4 CONTROL BLOCK                   1  12380
0003FA 0006                      1239          DC    X'0006'                                                 1  12390
0003FC                           1240          ORG   ZERO+X'03FC'                                            1  12400
0003FC 0708                      1241          DC    X'0708'                                                 1  12410
0003FE                           1242          ORG   ZERO+X'03FE'                                            1  12420
0003FE 03E8                      1243          DC    X'03E8'                                                 1  12430
```

```
  LOC  OBJ CODE  R1N1M R2N2 ADDR   STMT   SOURCE STATEMENT

                                  1246 ************************************************************************ 1  12460
                                  1247 *                                                                      * 1  12470
                                  1248 *   R O S   P R O G R A M   E Q U A T E   L I S T I N G               * 1  12480
                                  1249 *                                                                      * 1  12490
                                  1250 ************************************************************************ 1  12500
00007E                            1251 INTGP1   EQU   X'7E'          LEVEL 1 AND 2 INTERRUPT GROUP            1  12510
00007D                            1252 MACHK    EQU   X'7D'          MACHINE CHECKS                           1  12520
000070                            1253 STOP     EQU   X'70'          HARDSTOP                                 1  12530
000000                            1254 R0       EQU   0                                                       1  12540
000001                            1255 R1       EQU   1                                                       1  12550
000002                            1256 R2       EQU   2                                                       1  12560
000003                            1257 R3       EQU   3                                                       1  12570
000004                            1258 R4       EQU   4                                                       1  12580
000005                            1259 R5       EQU   5                                                       1  12590
000006                            1260 R6       EQU   6                                                       1  12600
000007                            1261 R7       EQU   7                                                       1  12610
                                  1262          END                                                           1  12620
```

NROS

CROSS-REFERENCE

SYMBOL	LEN	VALUE	DEFN	REFERENCES
EBRPT	00002	00030A	C1041	1036
BRPOINT	00002	000146	00549	0545
BRPT06	00002	000392	01202	1198
CHKIPL01	00002	00014E	00565	0563
CHKIPL02	00002	000152	00567	0565
CHKIPL03	00002	000156	00569	0567
CHKIPL04	00002	00015C	00572	0570
CONTLOOP	00002	0001FA	00776	0782
DROS02	00001	0000E8	00453	0443
ESCAPE	00001	0006FC	00416	0415
ESCCHK	00001	0000D2	00411	0397
F1BRPT	00002	00030C	01042	1062
INTGP1	00001	00007E	01251	0440
L1BRPT	00002	000308	01040	1034
L101	00002	0001E8	00765	0760
MACHK	00001	00007D	01252	0432
MAXIE01	00001	000030	00206	0212 0214 0219 0224 0227 0244 0265 0269 0278 0296 0302 0310 0315 0322 0477 0480
MAXIE02	00002	0000BC	00365	0356 0359
MAXIT01	00001	000002	00150	0348
MAXIT02	00001	000034	00210	0204
MAXIT03	00001	000056	00234	0258 0473 0474
MAXIT04	00001	000058	00239	0232
MAXIT05	00001	0000AC	00346	0362
MAXIT06	00001	0000B2	00354	0160 0344
MAXIT07	00001	0000BE	00378	0152
MAXIT08	00001	0000C2	00386	0393
MAXIT09	00001	0000C6	00390	0402
MAXIT10	00001	0000CC	00396	0388
NROS01	00001	000106	00492	
NROS03	00001	000126	00532	0498 0540 0548 0566 0568 0571 0575 0578 0607 0655 0748 0764 0778 0868 0876 1038 1201
NROS04	00001	000148	00561	0543
NROS05	00001	00016A	00594	0544
NROS05A	00001	000380	01192	0596
NROS06	00001	00016E	00598	0595 1202
NROS07	00001	000172	00602	
NROS08	00001	00017C	00619	0686
NROS09	00001	000188	00641	0649 0725
NROS10	00001	000198	00651	0515 0643 0771
NROS11	00001	0001A0	00663	0648
NROS11A	00001	000112	00509	0666
NROS12	00001	0001A6	00680	0604
NROS13	00001	0001AA	00684	0694
NROS14	00001	0001AE	00688	0682
NROS15	00001	0001BC	00712	0647
NROS16	00001	0001CE	00723	0720
NROS17	00001	0001D2	00733	0516 0665 0824 0832
NROS18	00001	0001D4	00744	0802 0906 0922 0929 0983 1020 1042 1133
NROS19	00001	0001DC	00758	0645 1040
NROS20	00001	0001F6	00773	0770
NROS21	00001	000208	00795	0695 0714 0721 1041
NROS22	00001	000222	00817	0801 0952 0959 0966 1111 1124 1159
NROS23	00001	000224	00820	0895 0902 1078 1082 1147
NROS24	00001	000230	00829	0836

NROS CROSS-REFERENCE

EC 316673
DATE JANUARY, 1977
P/N 1749531
LOGIC CW531

SYMBOL	LEN	VALUE	DEFN	REFERENCES
NROS25	00001	000240	C0848	0799
NROS26	00001	000244	00852	0800
NROS27	00001	00024E	00859	1097
NROS28	00001	000256	C0865	
NROS29	00001	000260	00873	0880
NROS30	00001	00026E	00889	0803
NROS31	CC001	00027A	00897	0890
NROS32	00001	000284	C0904	0893 1039
NROS33	00001	000288	C0916	0804
NROS34	00001	000298	C0926	0933
NROS35	00001	0002A6	C0944	0837
NROS36	00001	0002C0	00962	0949 0954
NROS37	00001	0002C8	00975	0956
NROS38	00001	0002D8	00994	0958
NROS39	00001	0002E4	01002	0996
NROS40	00001	0002E8	01006	0997
NROS41	00001	0002EC	01011	0998
NROS42	C0001	0002EE	C1014	1000 1004 1008
NROS43	00001	0002FA	C1032	0549
NROS44	00001	00030E	01055	1037
NROS45	CC001	000326	C1076	1065
NROS46	00001	00032A	01080	1067
NROS47	00001	00032E	01091	1058
NROS48	00001	00033A	01107	1061
NROS49	CC001	000342	01121	1063
NROS50	00001	00035A	01144	1126 1177
NROS51	00001	000360	01157	1060
NROS52	0C001	000364	01170	1158
NSELBRPT	00002	00023E	00837	0805
RELOCF	00001	000000	C0005	0010
ROS01	00001	0000D8	00431	0413
R0	00001	000000	01254	0172 0172 0173 0174 0176 0177 0179 0180 0182 0183 0185 0186 0188 0189 0191
				0192 0319 0392 0433 0437 0441 0455 0493 0493 0494 0494 0542 0564 0576 0577
				0606 0768 0774 0822 0825 0866 0869 0920 0923 0976 0980 1064 1122 1125 1130
				1175 1184
R1	00001	000001	01255	0154 0155 0174 0211 0213 0216 0217 0218 0221 0222 0223 0226 0230 0231 0240
				0241 0242 0243 0258 0262 0272 0275 0277 0292 0293 0294 0299 0300 0305 0307
				0312 0317 0336 0337 0347 0350 0355 0379 0387 0388 0391 0397 0400 0412 0413
				0432 0433 0435 0437 0440 0441 0443 0454 0454 0455 0457 0458 0460 0460 0461
				0462 0510 0512 0514 0536 0538 0539 0567 0569 0570 0572 0574 0620 0621 0622
				0644 0645 0646 0647 0648 0664 0665 0681 0682 0689 0691 0693 0713 0714 0715
				0717 0719 0724 0745 0746 0768 0769 0774 0775 0777 0798 0799 0800 0801 0802
				0803 0804 0805 0806 0807 0808 0822 0823 0825 0826 0831 0849 0849 0850 0853
				0853 0854 0855 0856 0856 0857 0860 0861 0862 0863 0866 0867 0869 0870 0875
				0890 0891 0892 0899 0900 0901 0917 0918 0919 0924 0928 0945 0946 0947 0951
				0953 0955 0957 0963 0964 0965 0995 0996 0997 0998 1018 1019 1033 1034 1035
				1036 1037 1057 1058 1059 1060 1061 1062 1063 1064 1066 1092 1092 1093 1094
				1095 1095 1096 1108 1109 1110 1122 1123 1127 1128 1145 1145 1158 1171 1172
				1173 1173 1174 1176 1178 1179 1180 1181 1193 1194 1199
R2	00001	000002	01256	0177
R3	00001	000003	01257	0180 0264 0268 0274 0294 0295 0300 0301 0307 0309 0342 0355 0384 0391 0495
				0496 0497 0534 0535 0544 0546 0547 0599 0600 0606 0623 0624 0747 0779 0780
				0781 0796 0796 0797 0821 0877 0878 0879 0905 0981 0982 1016 1017 1056 1131
				1132 1182 1183
R4	00001	000004	01258	0183 0473 0476 0479 0497 0533 0533 0534 0537 0547 0564 0576 0577 0600 0652

NROS

CROSS-REFERENCE

SYMBOL	LEN	VALUE	DEFN	REFERENCES															
				0654	0765	0767	0769	0776	0776	0779	0781	0806	0808	0823	0830	0830	0833	0835
				0861	0863	0867	0874	0874	0877	0879	0899	0901	0917	0919	0921	0927	0927	0930
				0932	0963	0965	0976	0995	1019	1066	1108	1110	1123					
R5	00001	000005	01259	0186	0261	0264	0277	0299	0301	0309	0312	0314	0317	0321	0511	0513	0514	0537
				0538	0562	0603	0604	0625	0642	0652	0653	0654	0690	0692	0693	0716	0718	0719
				0759	0760	0761	0761	0762	0763	0765	0766	0767	0833	0834	0835	0920	0921	0923
				0930	0931	0932	0977	0978	0979	0979	0980	1125	1126	1128	1129	1130	1175	1176
				1195	1196	1200												
R6	00001	000006	01260	0189	0474	0476	0478	0478	0479	0542								
R7	00001	000007	01261	0151	0157	0158	0192	0255	0255	0257	0259	0268	0272	0293	0295	0305	0314	0319
				0321	0356	0357	0471	0471	0472	0475	0541	0545	0565	0573	0574	0595	0605	0685
				0734	0818	0894	0898	0999	1003	1007	1012	1015	1077	1081	1146	1197	1198	
SMAXST	00001	000000	00147	0257	0472													
SROS	00001	000000	00004	0010	0416													
STOP	00001	000070	01253	0148	0207	0365	0445	0517	0518	0519								
TEST101	00002	000306	01039	1059														
X3705ADA	00001	000000	00002															
ZERO	00001	000000	00003	1220	1222	1224	1226	1228	1230	1232	1234	1236	1238	1240	1242			

NO STATEMENTS FLAGGED IN THIS ASSEMBLY
STATISTICS SOURCE RECORDS (SYSIN) = 1262
OPTIONS IN EFFECT LIST, NODECK, LOAD, NORENT, XREF, LINECNT = 55
1307 PRINTED LINES

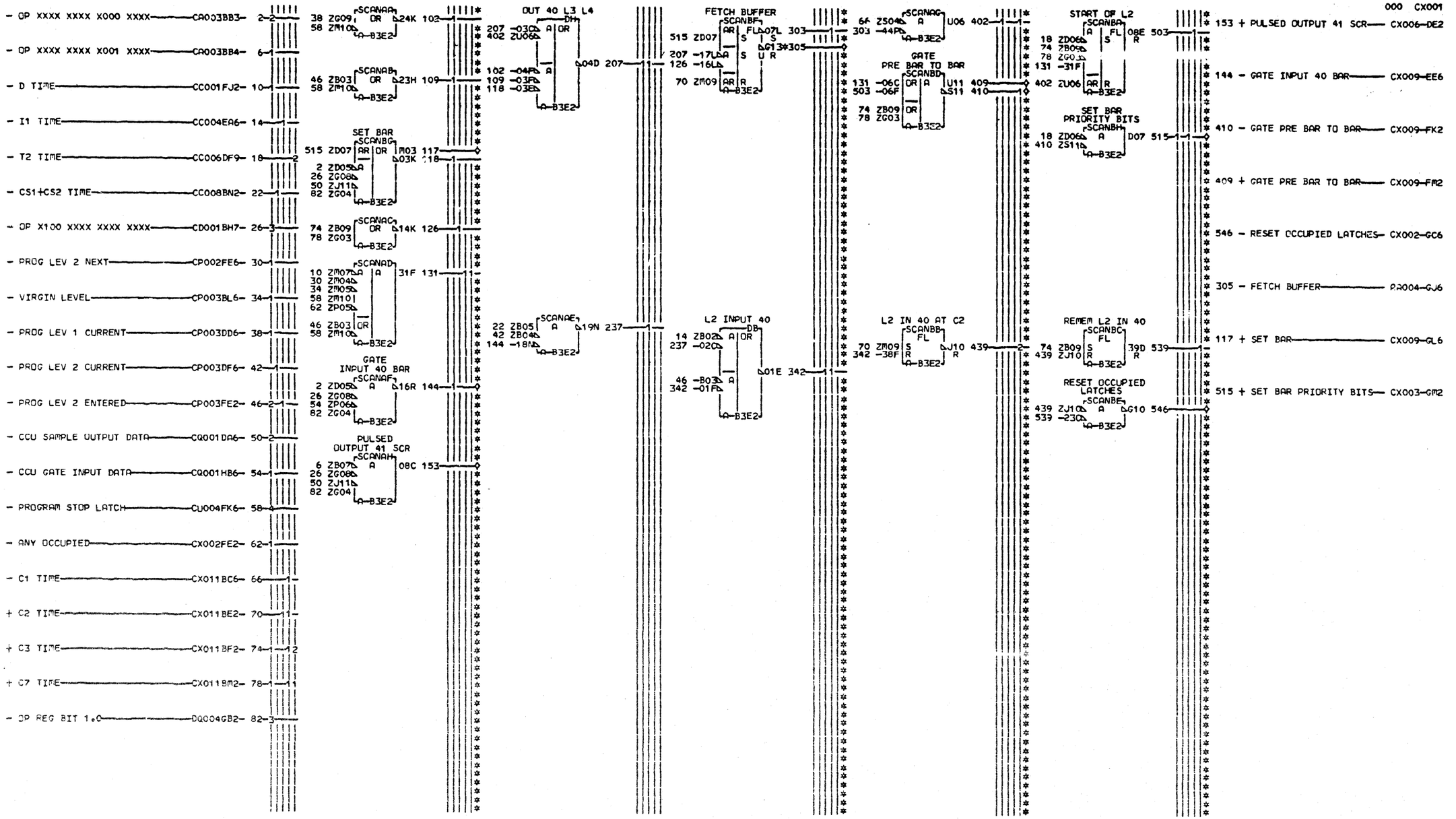

EDGE CONN.
305 A-B3A2D06

LOC. TYPE
A-B3E2 6809

CSB SUPPORT FEATURE
SEQUENCING CONTROL LATCHES
E.C.-HISTORY — E-MACH.3705

DATE	LAST EC		
10-14-80	344270	FRAME 01	
		IBM CORP.SCD	CX001
		P.N. 1769239	000

CX001
000

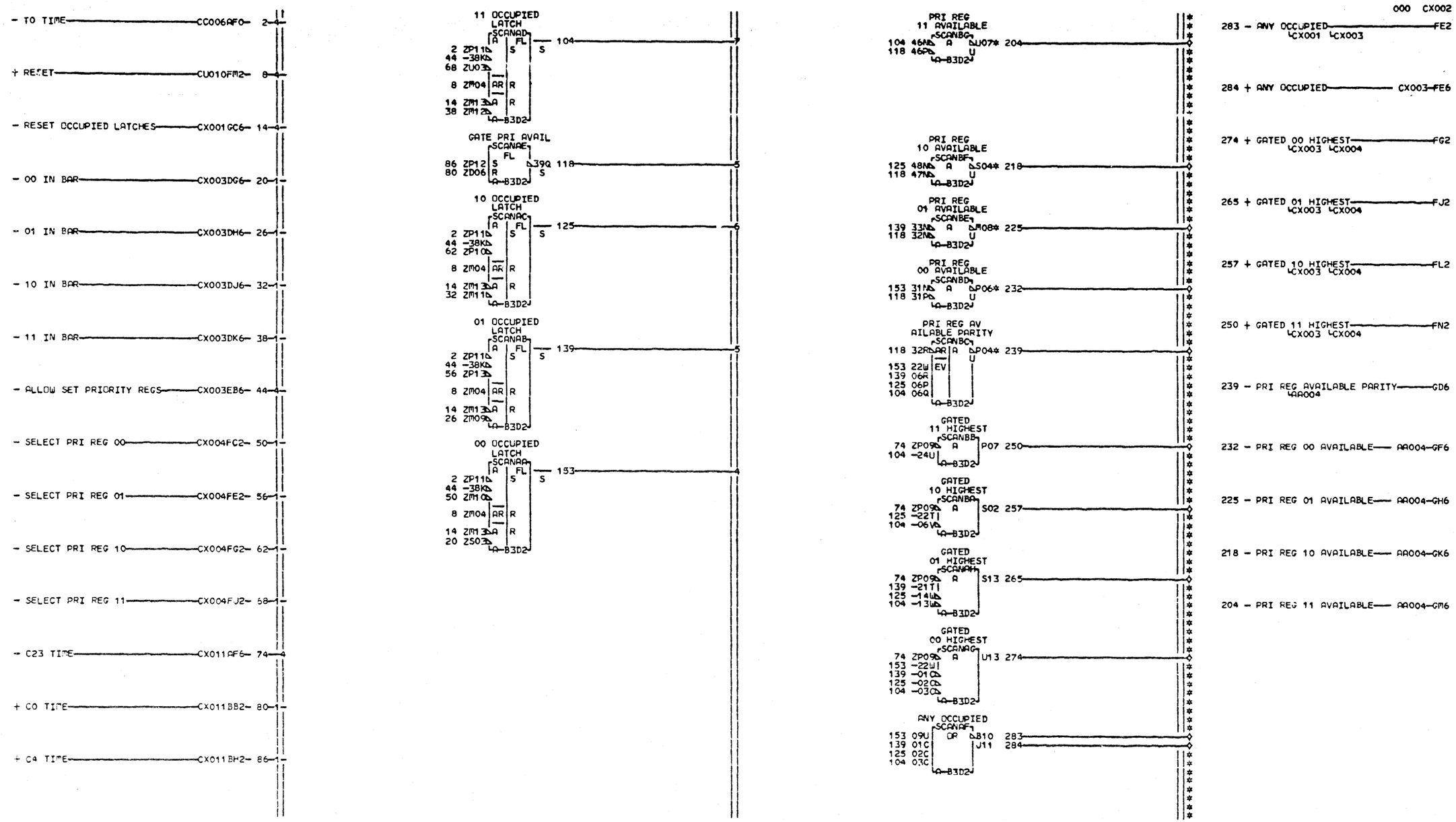

- TO TIME CC006AF0- 2
+ RESET CU010FM2- 8
- RESET OCCUPIED LATCHES CX001GC6- 14
- 00 IN BAR CX003DG6- 20
- 01 IN BAR CX003DH6- 26
- 10 IN BAR CX003DJ6- 32
- 11 IN BAR CX003DK6- 38
- ALLOW SET PRIORITY REGS CX003EB6- 44
- SELECT PRI REG 00 CX004FC2- 50
- SELECT PRI REG 01 CX004FE2- 56
- SELECT PRI REG 10 CX004FG2- 62
- SELECT PRI REG 11 CX004FJ2- 68
- C23 TIME CX011AF6- 74
+ C0 TIME CX011BB2- 80
+ C4 TIME CX011BH2- 86
11 OCCUPIED LATCH SCANAD 104
GATE PRI AVAIL SCANAE 118
10 OCCUPIED LATCH SCANAC 125
01 OCCUPIED LATCH SCANAB 139
00 OCCUPIED LATCH SCANAA 153
PRI REG 11 AVAILABLE SCANBG 204
PRI REG 10 AVAILABLE SCANBF 218
PRI REG 01 AVAILABLE SCANBE 225
PRI REG 00 AVAILABLE SCANBD 232
PRI REG AVAILABLE PARITY SCANBC 239
GATED 11 HIGHEST SCANBB 250
GATED 10 HIGHEST SCANBA 257
GATED 01 HIGHEST SCANAH 265
GATED 00 HIGHEST SCANAG 274
ANY OCCUPIED SCANAF 283 284
000 CX002
283 - ANY OCCUPIED FE2
284 + ANY OCCUPIED CX003-FE6
274 + GATED 00 HIGHEST FG2
265 + GATED 01 HIGHEST FJ2
257 + GATED 10 HIGHEST FL2
250 + GATED 11 HIGHEST FN2
239 - PRI REG AVAILABLE PARITY GD6
232 - PRI REG 00 AVAILABLE AA004-GF6
225 - PRI REG 01 AVAILABLE AA004-GH6
218 - PRI REG 10 AVAILABLE AA004-GK6
204 - PRI REG 11 AVAILABLE AA004-GM6
EDGE CONN.
204 A-B3A3D11
218 A-B3A2D13
225 A-B3A2D11
232 A-B3A2D10
239 A-B3A3D13
LOC. TYPE
A-B3D2 6808
CSB SUPPORT FEATURE
PRIORITY REG OCCUPIED LATCHES
E.C.-HISTORY E MACH.3705
FRAME 01
IBM CORP.SCD
P.N. 1769240
DATE LAST EC
10-14-80 344270
CX002
000

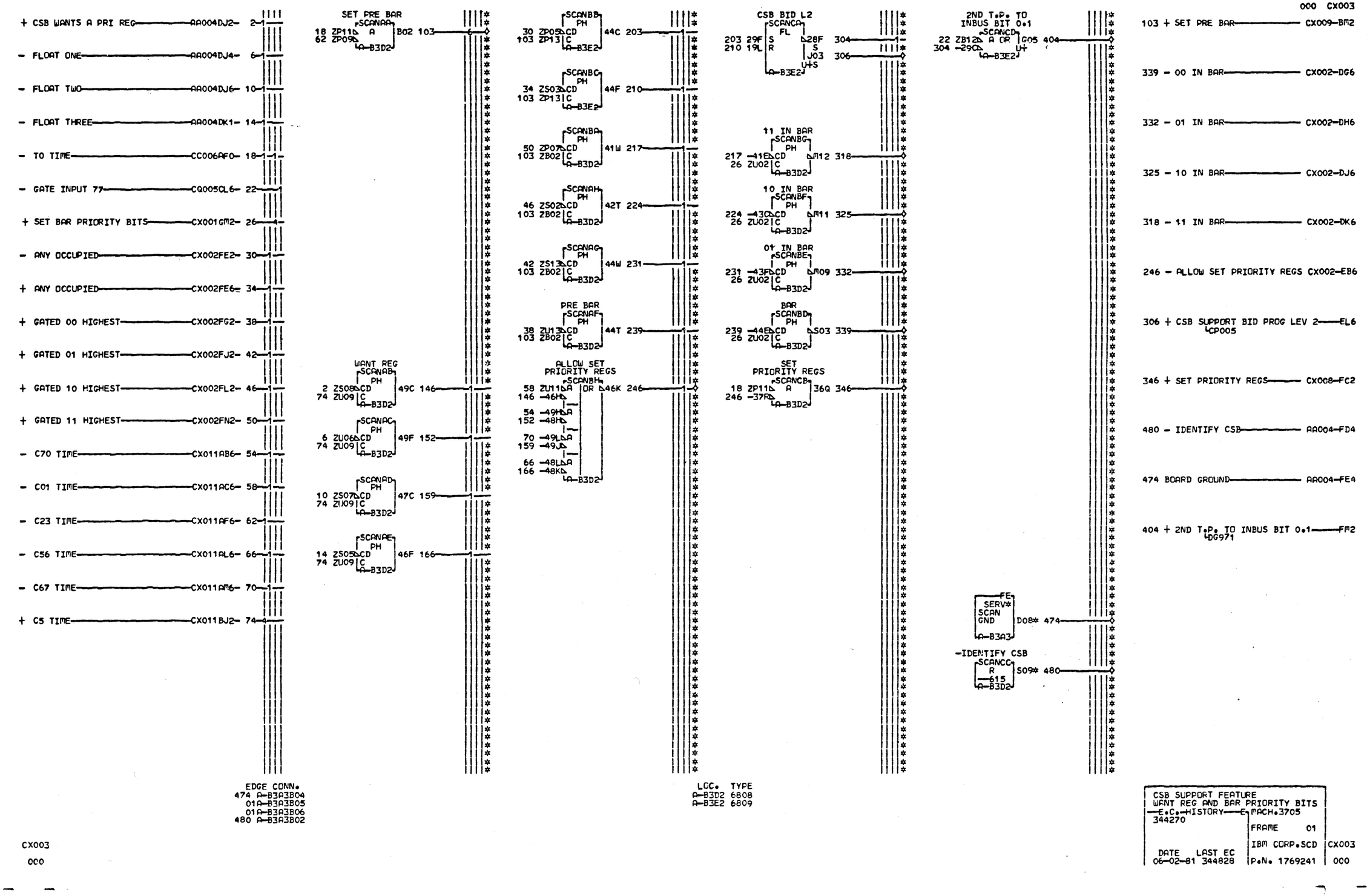
+ CSB WANTS A PRI REQ AA004DJ2- 2
- FLOAT ONE AA004DJ4- 6
- FLOAT TWO AA004DJ6- 10
- FLOAT THREE AA004DK1- 14
- TO TIME CC006AF0- 18
- GATE INPUT 77 CQ005CL6- 22
+ SET BAR PRIORITY BITS CX001GM2- 26
- ANY OCCUPIED CX002FE2- 30
+ ANY OCCUPIED CX002FE6- 34
+ GATED 00 HIGHEST CX002FG2- 38
+ GATED 01 HIGHEST CX002FJ2- 42
+ GATED 10 HIGHEST CX002FL2- 46
+ GATED 11 HIGHEST CX002FN2- 50
- C70 TIME CX011AB6- 54
- C01 TIME CX011AC6- 58
- C23 TIME CX011AF6- 62
- C56 TIME CX011AL6- 66
- C67 TIME CX011AM6- 70
+ C5 TIME CX011BJ2- 74
SET PRE BAR
SCANAA
18 ZP11 A
62 ZP09
B02 103
WANT REG
SCANAB
PH
2 ZS08 CD
74 ZU09 C
B3D2
49C 146
SCANAC
PH
6 ZU06 CD
74 ZU09 C
B3D2
49F 152
SCANAD
PH
10 ZS07 CD
74 ZU09 C
B3D2
47C 159
SCANAE
PH
14 ZS05 CD
74 ZU09 C
B3D2
46F 166
SCANBB
PH
30 ZP05 CD
103 ZP13 C
B3E2
44C 203
SCANBC
PH
34 ZS03 CD
103 ZP13 C
B3E2
44F 210
SCANBA
PH
50 ZP07 CD
103 ZB02 C
B3D2
41W 217
SCANAH
PH
46 ZS02 CD
103 ZB02 C
B3D2
42T 224
SCANAG
PH
42 ZS13 CD
103 ZB02 C
B3D2
44W 231
PRE BAR
SCANAF
PH
38 ZU13 CD
103 ZB02 C
B3D2
44T 239
ALLOW SET PRIORITY REGS
SCANBH
58 ZU11 A OR
146 -46H
54 -49H
152 -48H
70 -49L
159 -49J
66 -48L
166 -48K
B3D2
46K 246
CSB BID L2
SCANCA
FL
203 29F S
210 19L R
U+S
B3E2
28F 304
J03 306
11 IN BAR
SCANBG
PH
217 -41E CD
26 ZU02 C
B3D2
M12 318
10 IN BAR
SCANBF
PH
224 -43C CD
26 ZU02 C
B3D2
M11 325
01 IN BAR
SCANBE
PH
231 -43F CD
26 ZU02 C
B3D2
M09 332
BAR
SCANBD
PH
239 -44E CD
26 ZU02 C
B3D2
S03 339
SET PRIORITY REGS
SCANCB
18 ZP11 A
246 -37R
B3D2
36Q 346
2ND T.P. TO INBUS BIT 0.1
SCANCD
22 ZB12 A OR
304 -29C U+
B3E2
G05 404
FE
SERV*
SCAN
GND
B3A3
D08* 474
-IDENTIFY CSB
SCANCC
R
615
B3D2
S09* 480
000 CX003
103 + SET PRE BAR CX009-BM2
339 - 00 IN BAR CX002-DG6
332 - 01 IN BAR CX002-DH6
325 - 10 IN BAR CX002-DJ6
318 - 11 IN BAR CX002-DK6
246 - ALLOW SET PRIORITY REGS CX002-EB6
306 + CSB SUPPORT BID PROG LEV 2 EL6
CP005
346 + SET PRIORITY REGS CX008-FC2
480 - IDENTIFY CSB AA004-FD4
474 BOARD GROUND AA004-FE4
404 + 2ND T.P. TO INBUS BIT 0.1 FM2
DG971
EDGE CONN.
474 A-B3A3B04
01 A-B3A3B05
01 A-B3A3B06
480 A-B3A3B02
LOC. TYPE
A-B3D2 6808
A-B3E2 6809
CSB SUPPORT FEATURE
WANT REG AND BAR PRIORITY BITS
E.C. HISTORY
344270
DATE LAST EC
06-02-81 344828
MACH.3705
FRAME 01
IBM CORP.SCD CX003
P.N. 1769241 000
CX003
000

+ CSB TO COMMON BIT A — AA004DK3 — 2
- FLOAT FOUR — AA004DK5 — 7
- FLOAT FIVE — AA004DK7 — 12
- FLOAT SIX — AA004DL2 — 17
+ CSB TO COMMON BIT B — AA004DL4 — 22
- FLOAT SEVEN — AA004DL6 — 27
- FLOAT EIGHT — AA004DM1 — 32
- FLOAT NINE — AA004DM3 — 37
+ GATED 00 HIGHEST — CX002FG2 — 42
+ GATED 01 HIGHEST — CX002FJ2 — 47
+ GATED 10 HIGHEST — CX002FL2 — 52
+ GATED 11 HIGHEST — CX002FN2 — 57
- C70 TIME — CX011AB6 — 62
- C01 TIME — CX011AC6 — 67
+ C23 TIME — CX011AF2 — 72
- C56 TIME — CX011AL6 — 77
- C67 TIME — CX011AM6 — 82
+ C5 TIME — CX011BJ2 — 87

PRI REQ REG
SCANAA PH
2 ZM07 CD
87 ZU09 C
A-B3D2
34C 104

SCANAB PH
7 ZP05 CD
87 ZU09 C
A-B3D2
34F 110

SCANAC PH
12 ZM05 CD
87 ZU09 C
A-B3D2
32C 117

SCANAD PH
17 ZU12 CD
87 ZU09 C
A-B3D2
31F 124

PRI REQ REG
SCANAE PH
22 ZU12 CD
87 ZU09 C
A-B3D2
54C 132

SCANAF PH
27 ZS11 CD
87 ZU09 C
A-B3D2
54F 138

SCANAG PH
32 ZS12 CD
87 ZU09 C
A-B3D2
52C 145

SCANAH PH
37 ZU10 CD
87 ZU09 C
A-B3D2
51F 152

SCANBA
67 ZU11 A | OR | 41J 202
104 -41H
62 -44H A
110 -43H
82 -44L A
117 -44J
77 -43L A
124 -43K
A-B3D2

SCANBB
67 ZU11 A | OR | 46U 230
132 -46T
62 -49T A
138 -48T
82 -49U A
145 -49U
77 -48U A
152 -48V
A-B3D2

SELECT PRI REG 11
SCANBF
57 ZP07 AR | OR | ZU03 304
G11 305
72 -43Q A
202 -41J
230 -46U
A-B3D2

SELECT PRI REG 10
SCANBE
52 ZS02 AR | OR | ZP10 360
B04 361
72 -43Q A
202 -41J
230 -43R
A-B3D2

SELECT PRI REG 01
SCANBD
47 ZS13 AR | OR | ZP13 370
B03 371
72 -43Q A
202 -44Q
230 -46U
A-B3D2

SELECT PRI REG 00
SCANBC
42 ZU13 AR | OR | ZM10 380
B11 381
72 -43Q A
202 -42N
230 -43N
A-B3D2

380 - SELECT PRI REG 00 — CX002-FC2
381 + SELECT PRI REG 00 — CX008-FC6
370 - SELECT PRI REG 01 — CX002-FE2
371 + SELECT PRI REG 01 — CX008-FE6
360 - SELECT PRI REG 10 — CX002-FG2
361 + SELECT PRI REG 10 — CX008-FG6
304 - SELECT PRI REG 11 — CX002-FJ2
305 + SELECT PRI REG 11 — CX008-FJ6

LOC. TYPE
A-B3D2 6808

CX004
000

CSB SUPPORT FEATURE
PRI REQ REG AND REG SELECTION
E.C. HISTORY
344270
DATE LAST EC
06-02-81 344828
MACH. 3705
FRAME 01
IBM CORP. SCD
P.N. 1769242
CX004
000

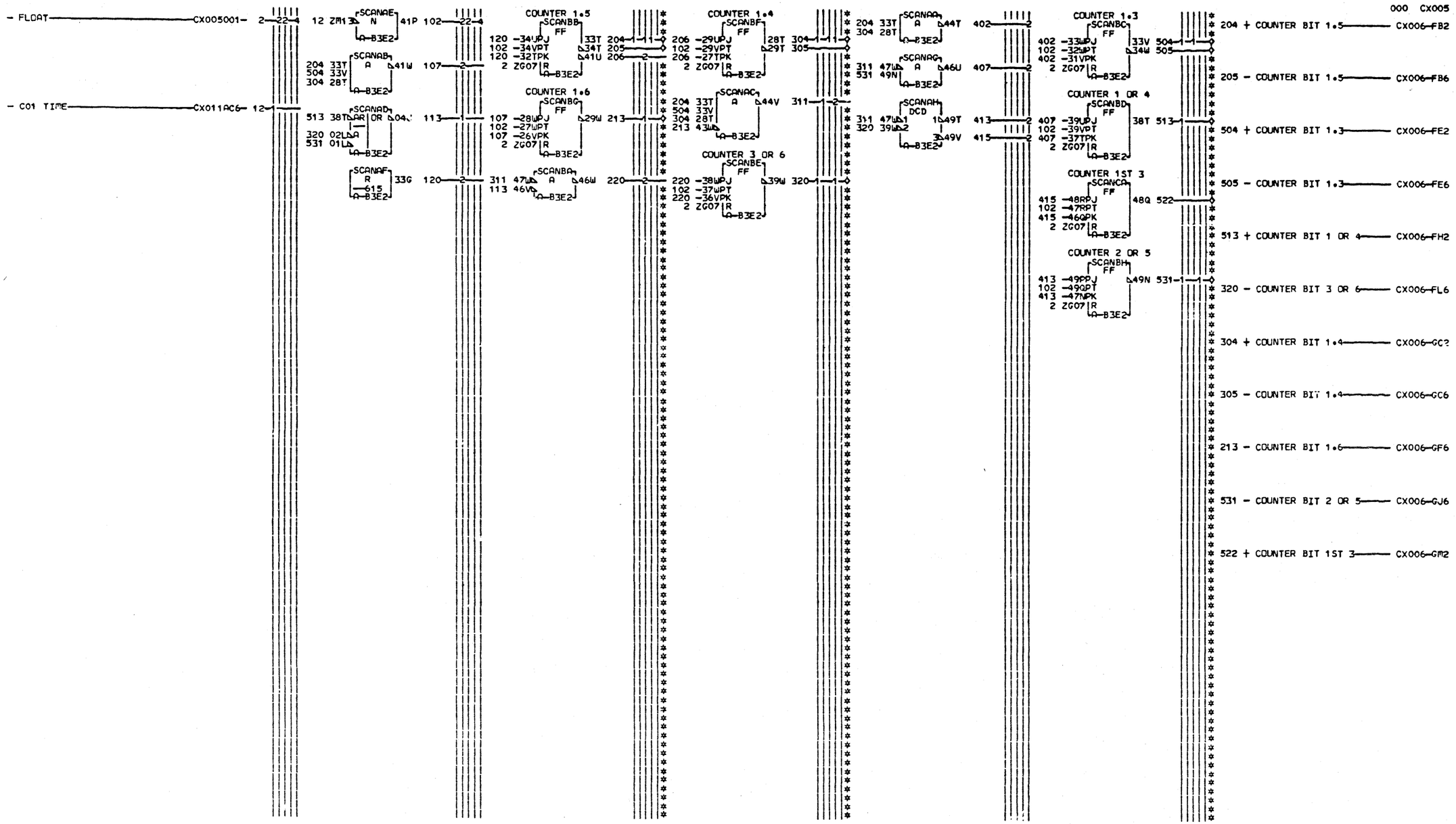

CSB SUPPORT FEATURE
LINE ADDRESS COUNTER
E.C.-HISTORY-E MACH.3705
FRAME 01
IBM CORP.SCD
P.No. 1769243
DATE LAST EC
10-14-80 344270

CX005
000

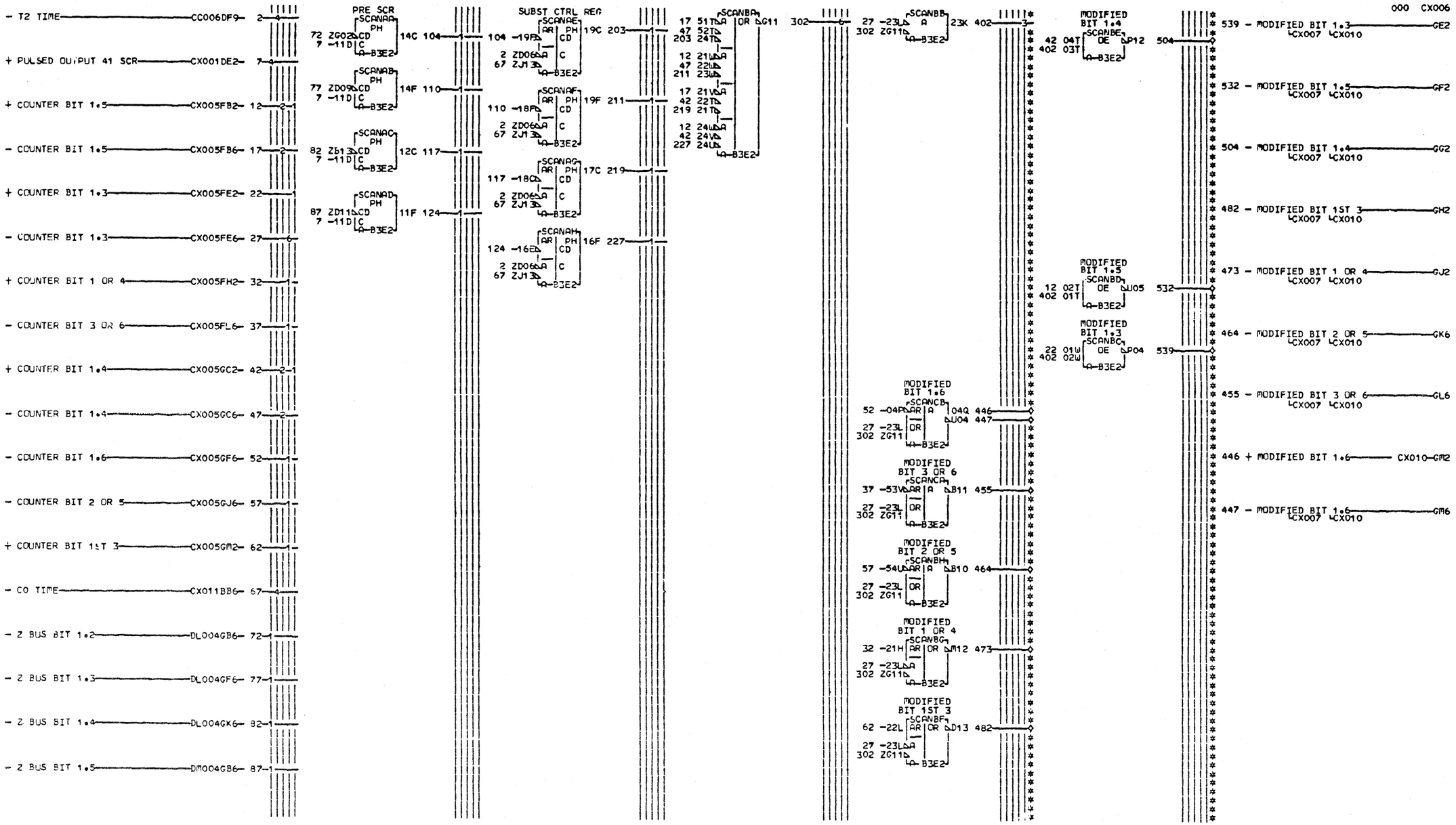
- T2 TIME CC006DF9- 2
+ PULSED OUTPUT 41 SCR CX001DE2- 7
+ COUNTER BIT 1.5 CX005FB2- 12
- COUNTER BIT 1.5 CX005FB6- 17
+ COUNTER BIT 1.3 CX005FE2- 22
- COUNTER BIT 1.3 CX005FE6- 27
+ COUNTER BIT 1 OR 4 CX005FH2- 32
- COUNTER BIT 3 OR 6 CX005FL6- 37
+ COUNTER BIT 1.4 CX005GC2- 42
- COUNTER BIT 1.4 CX005GC6- 47
- COUNTER BIT 1.6 CX005GF6- 52
- COUNTER BIT 2 OR 5 CX005GJ6- 57
+ COUNTER BIT 1ST 3 CX005GM2- 62
- CO TIME CX011BB6- 67
- Z BUS BIT 1.2 DL004GB6- 72
- Z BUS BIT 1.3 DL004GF6- 77
- Z BUS BIT 1.4 DL004GK6- 82
- Z BUS BIT 1.5 DM004GB6- 87
PRE SCR
SCANAA PH 14C 104
SCANAB PH 14F 110
SCANAC PH 12C 117
SCANAD PH 11F 124
SUBST CTRL REG
SCANAE PH 19C 203
SCANAF PH 19F 211
SCANAG PH 17C 219
SCANAH PH 16F 227
SCANBA OR G11 302
SCANBB A 23K 402
MODIFIED BIT 1.4
SCANBE OE P12 504
MODIFIED BIT 1.5
SCANBD OE U05 532
MODIFIED BIT 1.3
SCANBC OE P04 539
MODIFIED BIT 1.6
SCANCB A U04 446 447
MODIFIED BIT 3 OR 6
SCANCA A B11 455
MODIFIED BIT 2 OR 5
SCANBH A B10 464
MODIFIED BIT 1 OR 4
SCANBG OR M12 473
MODIFIED BIT 1ST 3
SCANBF OR D13 482
000 CX006
539 - MODIFIED BIT 1.3 GE2
CX007 CX010
532 - MODIFIED BIT 1.5 GF2
CX007 CX010
504 - MODIFIED BIT 1.4 GG2
CX007 CX010
482 - MODIFIED BIT 1ST 3 GH2
CX007 CX010
473 - MODIFIED BIT 1 OR 4 GJ2
CX007 CX010
464 - MODIFIED BIT 2 OR 5 GK6
CX007 CX010
455 - MODIFIED BIT 3 OR 6 GL6
CX007 CX010
446 + MODIFIED BIT 1.6 CX010 GM2
447 - MODIFIED BIT 1.6 GM6
CX007 CX010
LOC. TYPE
A-B3E2 6809
CSB SUPPORT FEATURE
MASK REG AND MODIFIED COUNTER
E.C. HISTORY E. MACH. 3705
FRAME 01
IBM CORP. SCD CX006
DATE LAST EC P.N. 1769244 000
10-14-80 344270
CX006
000

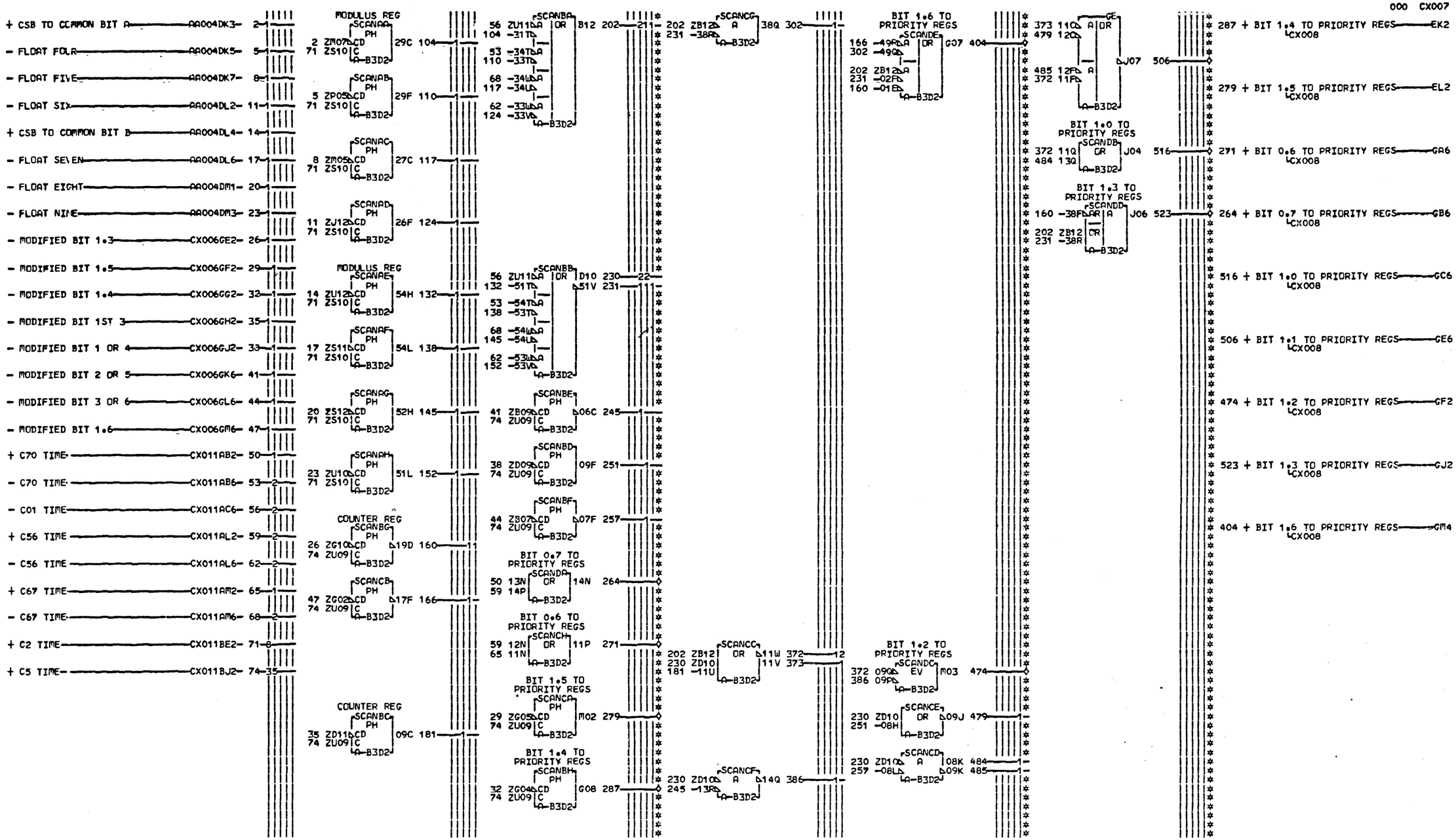
000 CX007
+ CSB TO COMMON BIT A — AA004DK3 — 2
- FLOAT FOUR — AA004DK5 — 5
- FLOAT FIVE — AA004DK7 — 8
- FLOAT SIX — AA004DL2 — 11
+ CSB TO COMMON BIT B — AA004DL4 — 14
- FLOAT SEVEN — AA004DL6 — 17
- FLOAT EIGHT — AA004DM1 — 20
- FLOAT NINE — AA004DM3 — 23
- MODIFIED BIT 1.3 — CX006GE2 — 26
- MODIFIED BIT 1.5 — CX006GF2 — 29
- MODIFIED BIT 1.4 — CX006GG2 — 32
- MODIFIED BIT 1ST 3 — CX006GH2 — 35
- MODIFIED BIT 1 OR 4 — CX006GJ2 — 33
- MODIFIED BIT 2 OR 5 — CX006GK6 — 41
- MODIFIED BIT 3 OR 6 — CX006GL6 — 44
- MODIFIED BIT 1.6 — CX006GM6 — 47
+ C70 TIME — CX011AB2 — 50
- C70 TIME — CX011AB6 — 53
- C01 TIME — CX011AC6 — 56
+ C56 TIME — CX011AL2 — 59
- C56 TIME — CX011AL6 — 62
+ C67 TIME — CX011AM2 — 65
- C67 TIME — CX011AM6 — 68
+ C2 TIME — CX011BE2 — 71
+ C5 TIME — CX011BJ2 — 74
MODULUS REG
SCANAA PH 2 ZM07 CD 71 ZS10 C A-B3D2 29C 104
SCANAB PH 5 ZP05 CD 71 ZS10 C A-B3D2 29F 110
SCANAC PH 8 ZM05 CD 71 ZS10 C A-B3D2 27C 117
SCANAD PH 11 ZJ12 CD 71 ZS10 C A-B3D2 26F 124
MODULUS REG
SCANAE PH 14 ZU12 CD 71 ZS10 C A-B3D2 54H 132
SCANAF PH 17 ZS11 CD 71 ZS10 C A-B3D2 54L 138
SCANAG PH 20 ZS12 CD 71 ZS10 C A-B3D2 52H 145
SCANAH PH 23 ZU10 CD 71 ZS10 C A-B3D2 51L 152
COUNTER REG
SCANBG PH 26 ZG10 CD 74 ZU09 C A-B3D2 19D 160
SCANCB PH 47 ZG02 CD 74 ZU09 C A-B3D2 17F 166
COUNTER REG
SCANBC PH 35 ZD11 CD 74 ZU09 C A-B3D2 09C 181
SCANBA OR 56 ZU11 A, 104 -31T, 53 -34T A, 110 -33T, 68 -34W A, 117 -34L, 62 -33W A, 124 -33V A-B3D2 B12 202
SCANBB OR 56 ZU11 A, 132 -51T, 53 -54T A, 138 -53T, 68 -54W A, 145 -54L, 62 -53W A, 152 -53V A-B3D2 D10 230, 51V 231
SCANBE PH 41 ZB09 CD 74 ZU09 C A-B3D2 06C 245
SCANBD PH 38 ZD09 CD 74 ZU09 C A-B3D2 09F 251
SCANBF PH 44 ZB07 CD 74 ZU09 C A-B3D2 07F 257
BIT 0.7 TO PRIORITY REGS
SCANDA OR 50 13N, 59 14P A-B3D2 14N 264
BIT 0.6 TO PRIORITY REGS
SCANCH OR 59 12N, 65 11N A-B3D2 11P 271
BIT 1.5 TO PRIORITY REGS
SCANCA PH 29 ZG05 CD 74 ZU09 C A-B3D2 M02 279
BIT 1.4 TO PRIORITY REGS
SCANBH PH 32 ZG04 CD 74 ZU09 C A-B3D2 G08 287
SCANCG A 202 ZB12, 231 -38R A-B3D2 38Q 302
BIT 1.6 TO PRIORITY REGS
SCANDE OR 166 -49R A, 302 -49Q, 202 ZB12 A, 231 -02R, 160 -01E A-B3D2 G07 404
SCANCC OR 202 ZB12, 230 ZD10, 181 -11U A-B3D2 11W 372, 11V 373
SCANCF A 230 ZD10, 245 -13R A-B3D2 14Q 386
BIT 1.2 TO PRIORITY REGS
SCANDC EV 372 09Q, 386 09P A-B3D2 M03 474
SCANCE OR 230 ZD10, 251 -08H A-B3D2 09J 479
SCANCD A 230 ZD10 A-B3D2 08K 484, 257 -08L 09K 485
GE 373 11Q, 479 12Q A, B 485 12P, 372 11P A-B3D2 J07 506
BIT 1.0 TO PRIORITY REGS
SCANDB GR 372 11Q, 484 13Q A-B3D2 J04 516
BIT 1.3 TO PRIORITY REGS
SCANDD AR 160 -38P, CR 202 ZB12, 231 -38R A-B3D2 J06 523
287 + BIT 1.4 TO PRIORITY REGS — EK2 (CX008)
279 + BIT 1.5 TO PRIORITY REGS — EL2 (CX008)
271 + BIT 0.6 TO PRIORITY REGS — GA6 (CX008)
264 + BIT 0.7 TO PRIORITY REGS — GB6 (CX008)
516 + BIT 1.0 TO PRIORITY REGS — GC6 (CX008)
506 + BIT 1.1 TO PRIORITY REGS — GE6 (CX008)
474 + BIT 1.2 TO PRIORITY REGS — CF2 (CX008)
523 + BIT 1.3 TO PRIORITY REGS — GJ2 (CX008)
404 + BIT 1.6 TO PRIORITY REGS — GM4 (CX008)
LOC. TYPE
A-B3D2 6808
CSB SUPPORT FEATURE
MODULUS REG AND COUNTER REG
E.C.-HISTORY — E. MACH.3705
344270
FRAME 01
IBM CORP.SCD CX007
DATE LAST EC
06-02-81 344828
P.N. 1769245 000
CX007
000

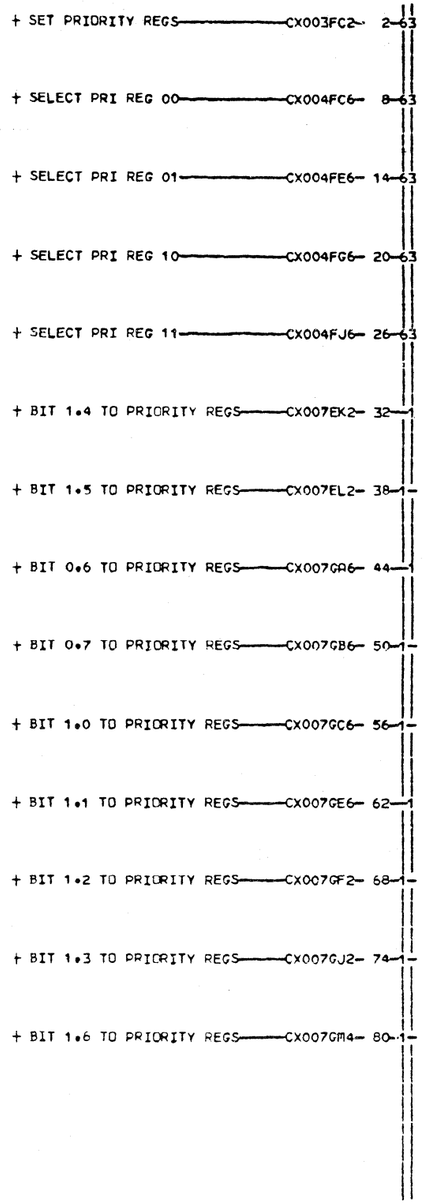

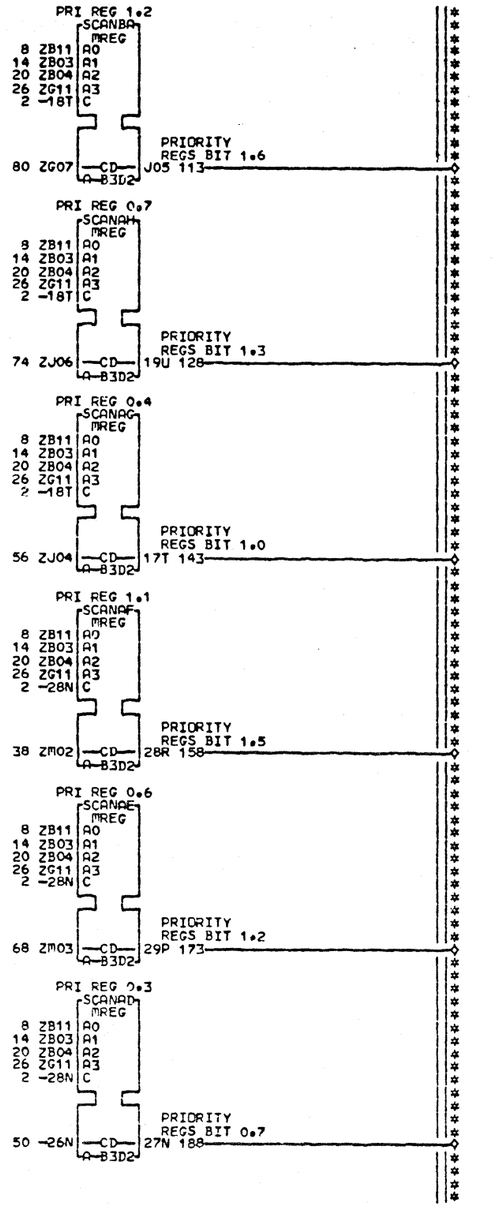

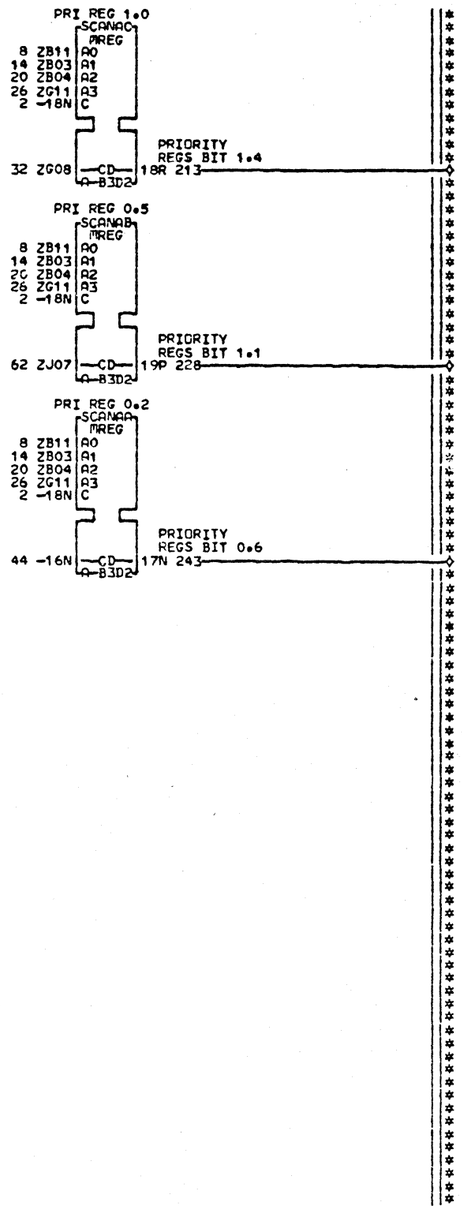

000 CX008

243 + PRIORITY REGS BIT 0.6 — CX009-BD6

228 + PRIORITY REGS BIT 1.1 — CX009-BG6

213 + PRIORITY REGS BIT 1.4 — CX009-BK6

188 + PRIORITY REGS BIT 0.7 — CX009-DD6

173 + PRIORITY REGS BIT 1.2 — CX009-DG6

158 + PRIORITY REGS BIT 0.5 — CX009-DK6

143 + PRIORITY REGS BIT 1.0 — CX009-FD6

128 + PRIORITY REGS BIT 1.3 — CX009-FG6

113 + PRIORITY REGS BIT 1.6 — CX009-FK6

LOC. TYPE
A-B3D2 6808

CX008
000

CSB SUPPORT FEATURE
PRIORITY REGISTER LOCAL STORE
E.C. HISTORY — E. MACH. 3705

DATE	LAST EC			
10-14-80	344270	FRAME 01	IBM CORP. SCD	CX008
		P.N. 1769246		000

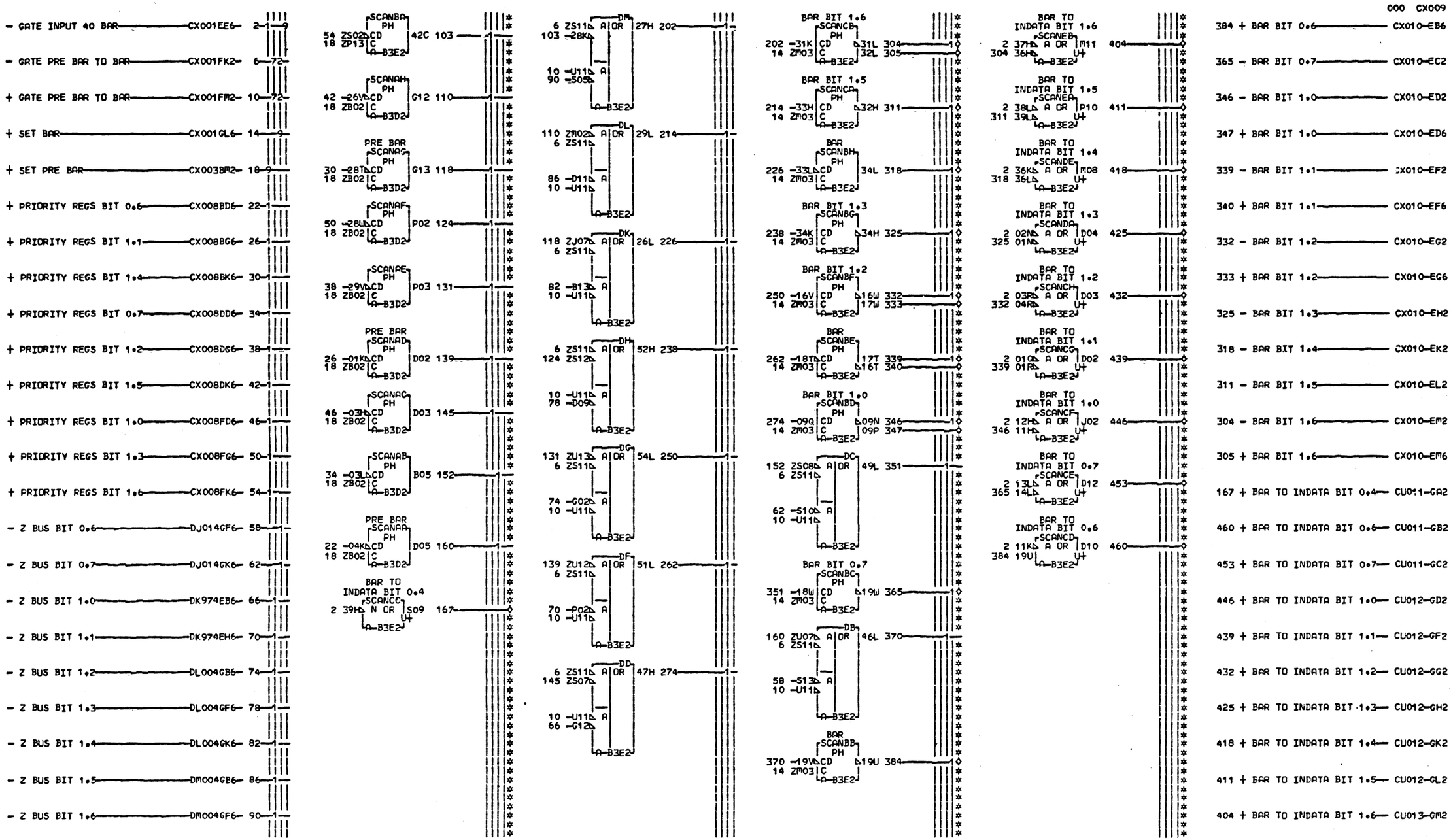

CSB SUPPORT FEATURE
PRE BAR AND BAR

E.C.-HISTORY	MACH.3705	
344270	FRAME 01	
DATE LAST EC	IBM CORP.SCD	CX009
06-02-81 344828	P.N. 1769247	000

CX009
000

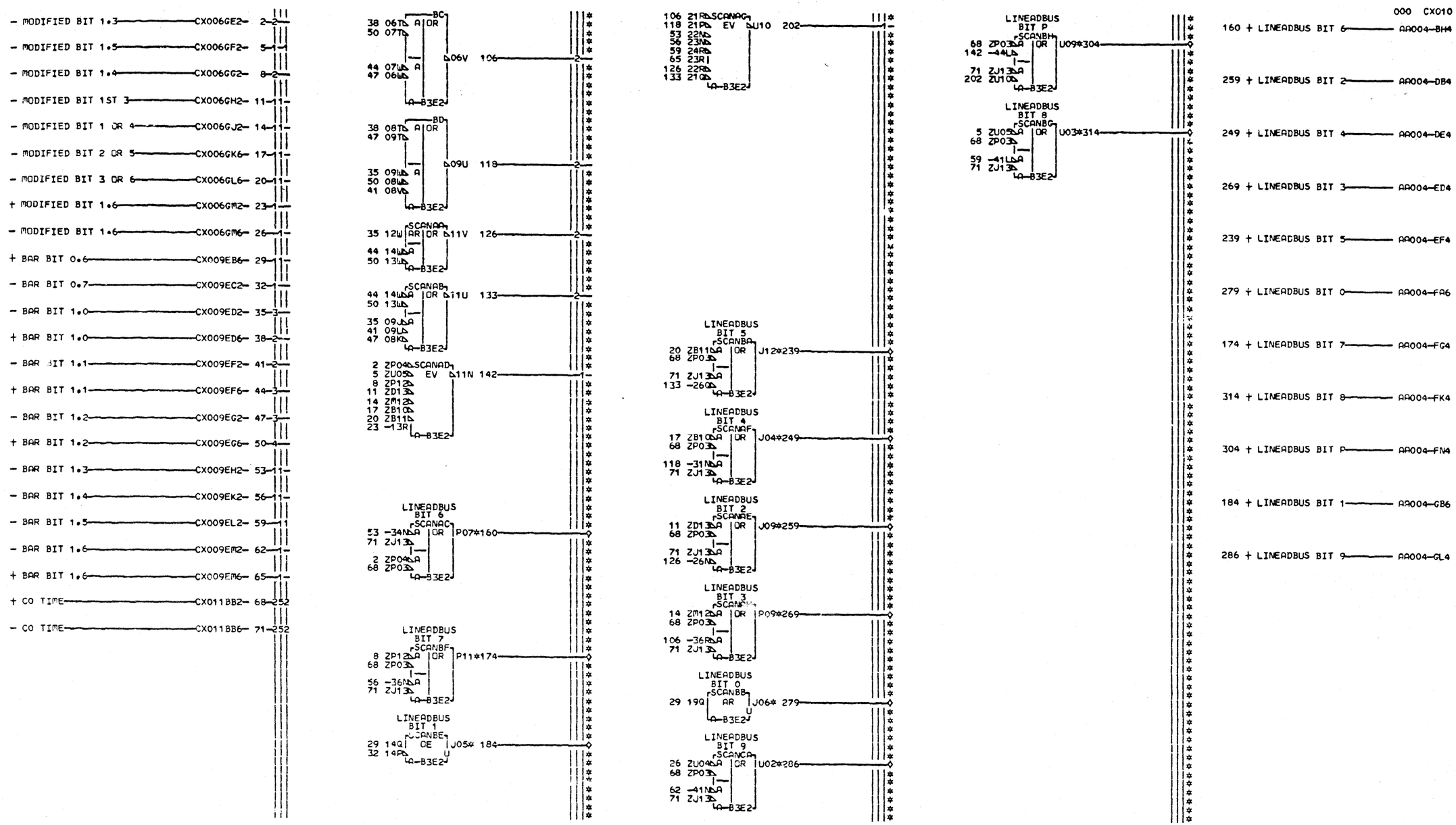

EDGE CONN. 304 A-B3A2D03
160 A-B3A2B10 314 A-B3A2B13
174 A-B3A2B12
184 A-B3A2B04
239 A-B3A2B09
249 A-B3A2B08
259 A-B3A2B05
269 A-B3A2B06
279 A-B3A2B02
286 A-B3A2D02

LOC. TYPE
A-B3E2 6809

CX010
000

CSB SUPPORT FEATURE
LINE ADDRESS BUS ASSEMBLER
E.C. HISTORY E MACH.3705
FRAME 01
IBM CORP.SCD
DATE LAST EC
10-14-80 344270
P.N. 1769248

CX010
000

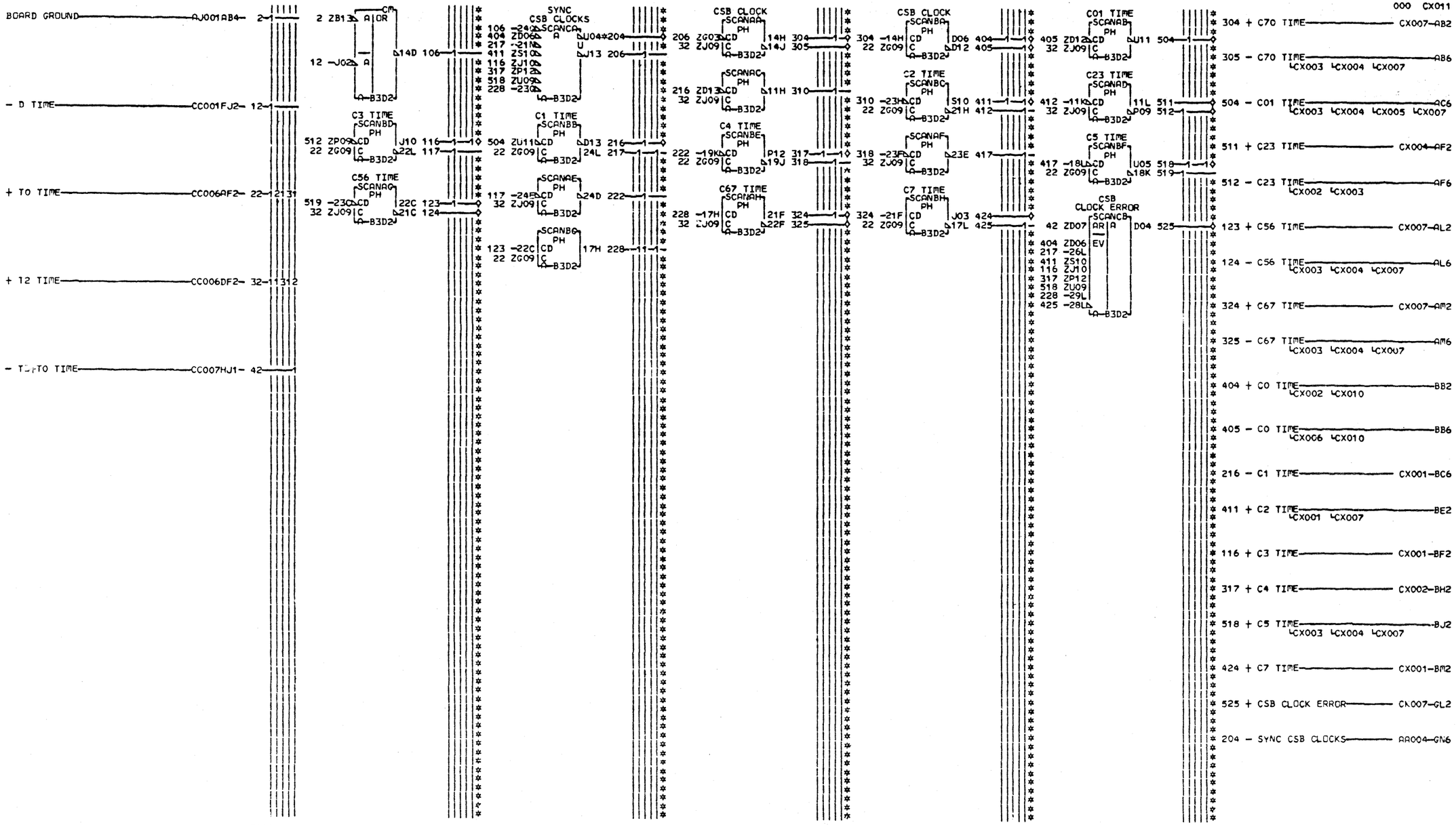

BOARD GROUND
- D TIME
+ TO TIME
+ T2 TIME
- T2 TO TIME
EDGE CONN.
204 A-B3A2D05
SYNC CSB CLOCKS
C3 TIME
C56 TIME
C1 TIME
CSB CLOCK
C4 TIME
C67 TIME
C2 TIME
C7 TIME
C01 TIME
C23 TIME
C5 TIME
CSB CLOCK ERROR
LOC. TYPE
A-B3D2 6808
000 CX011
304 + C70 TIME CX007-AB2
305 - C70 TIME AB6
504 - C01 TIME AC6
511 + C23 TIME CX004-AF2
512 - C23 TIME AF6
123 + C56 TIME CX007-AL2
124 - C56 TIME AL6
324 + C67 TIME CX007-AM2
325 - C67 TIME AM6
404 + C0 TIME BB2
405 - C0 TIME BB6
216 - C1 TIME CX001-BC6
411 + C2 TIME BE2
116 + C3 TIME CX001-BF2
317 + C4 TIME CX002-BH2
518 + C5 TIME BJ2
424 + C7 TIME CX001-BM2
525 + CSB CLOCK ERROR CK007-GL2
204 - SYNC CSB CLOCKS AA004-GN6
CSB SUPPORT FEATURE
E.C. HISTORY
MACH. 3705
FRAME 01
IBM CORP. SCD
P.N. 1769249
DATE LAST EC
10-14-80 344270
CX011
000

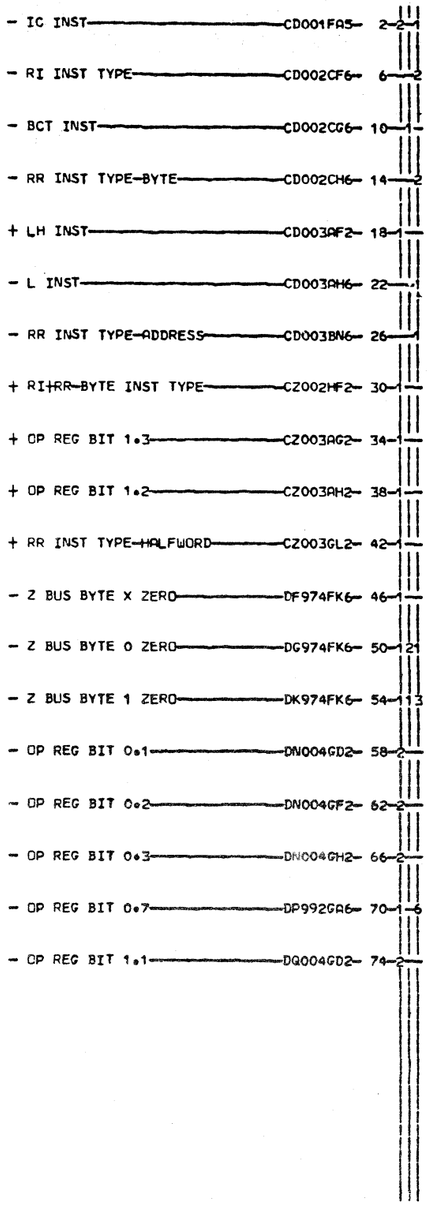

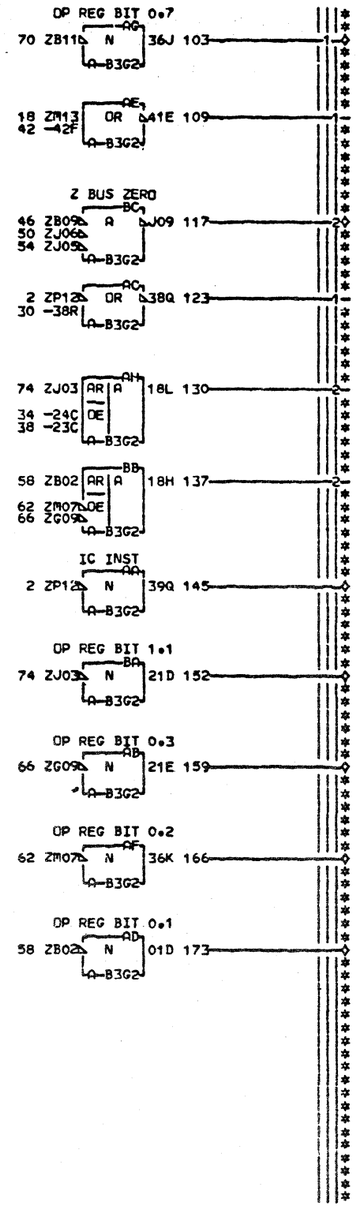

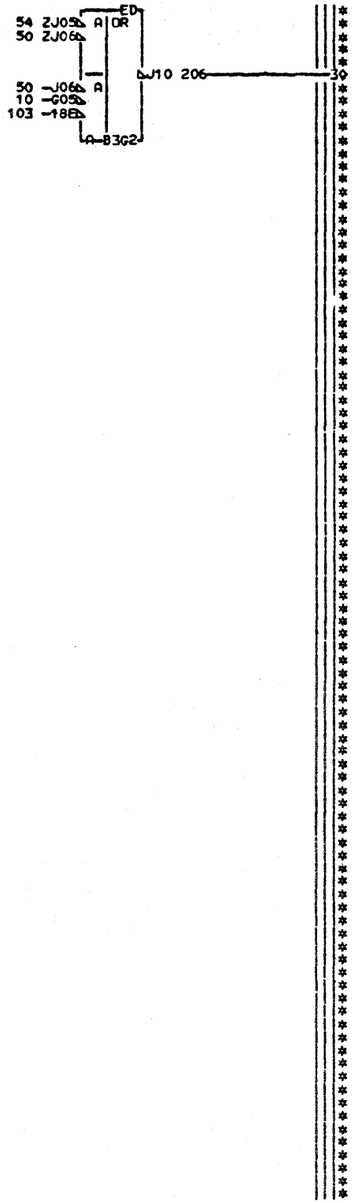

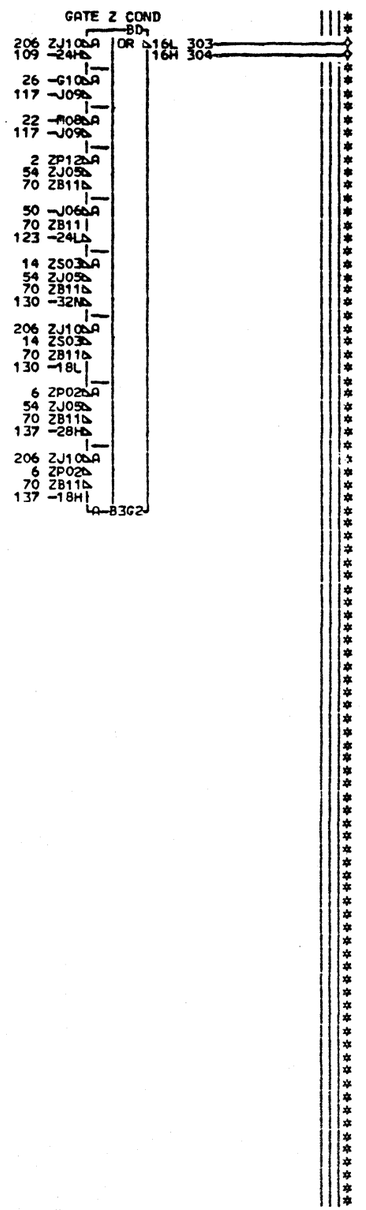

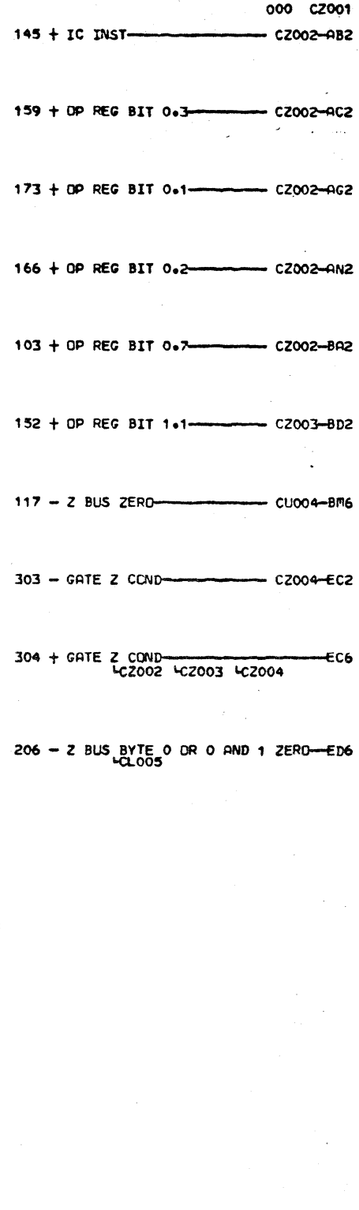

LOC. TYPE
A-B3G2 Y702

CZ001
000

CONDITION CODES
GATE Z CONDITION
E.C.-HISTORY- MACH.3705
FRAME 01
IBM CORP.SCD CZ001
DATE LAST EC P.N. 1852856 000
10-14-80 344270

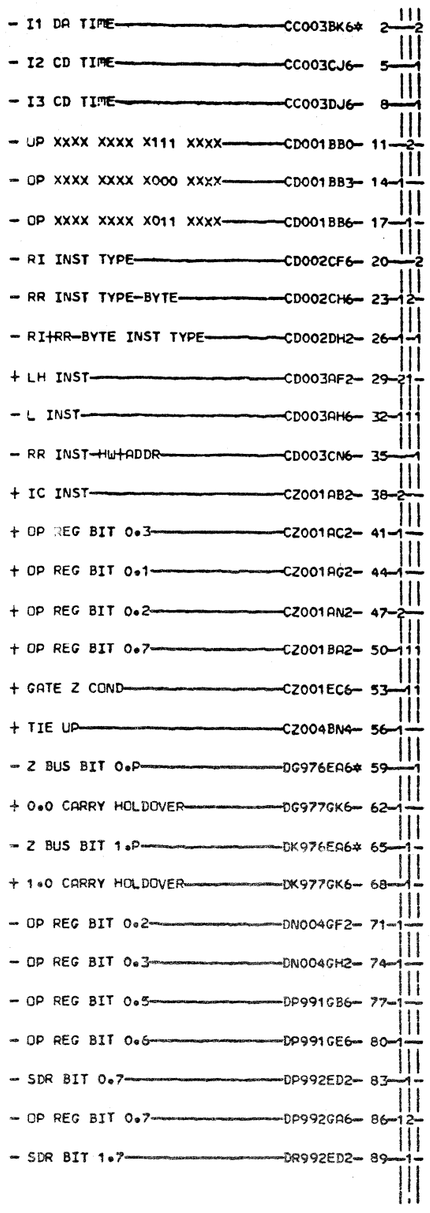
- I1 DA TIME CC003BK6* 2
- I2 CD TIME CC003CJ6- 5
- I3 CD TIME CC003DJ6- 8
- UP XXXX XXXX X111 XXXX CD001BB0- 11
- OP XXXX XXXX X000 XXXX CD001BB3- 14
- OP XXXX XXXX X011 XXXX CD001BB6- 17
- RI INST TYPE CD002CF6- 20
- RR INST TYPE-BYTE CD002CH6- 23
- RI+RR-BYTE INST TYPE CD002DH2- 26
+ LH INST CD003AF2- 29
- L INST CD003AH6- 32
- RR INST-HW+ADDR CD003CN6- 35
+ IC INST CZ001AB2- 38
+ OP REG BIT 0.3 CZ001AC2- 41
+ OP REG BIT 0.1 CZ001AG2- 44
+ OP REG BIT 0.2 CZ001AN2- 47
+ OP REG BIT 0.7 CZ001BA2- 50
+ GATE Z COND CZ001EC6- 53
+ TIE UP CZ004BN4- 56
- Z BUS BIT 0.P DG976EA6* 59
+ 0.0 CARRY HOLDOVER DG977GK6- 62
- Z BUS BIT 1.P DK976EA6* 65
+ 1.0 CARRY HOLDOVER DK977GK6- 68
- OP REG BIT 0.2 DN004GF2- 71
- OP REG BIT 0.3 DN004GH2- 74
- OP REG BIT 0.5 DP991GB6- 77
- OP REG BIT 0.6 DP991GE6- 80
- SDR BIT 0.7 DP992ED2- 83
- OP REG BIT 0.7 DP992GA6- 86
- SDR BIT 1.7 DR992ED2- 89
EDGE CONN.
2 RESISTOR A-B3G2C11
59 RESISTOR A-B3G2B12
65 RESISTOR A-B3G2D07
CZ002
000
47 -03C
62 ZB05
AB
OE
04D 102
A-B3G2
56 33C
BE
A OR
34E 109
34D 113
71 M07
74 G09
86 B11
RI ADD+SUBTRACT+COMPARE
44 24R
AD
AR A
J12 123
24Q 124
41 38L
47 39L
OR
38 -41L
AC
AR OR
41K 130
14 -43L
23 ZS03
OP XXXX X000 XXXX XXXX
50 -38V
AH
A
J03 139
77 ZD03
39V 140
80 ZD05
29 ZM13
38 -41L
AF
OR
41J 145
AA
41D 151
32 ZM08
RI+RR-BYTE INST TYPE
26 ZU02
BD
N
44E 160
102 31C
CD
109 32C
68 J04
113 31F
31E 206
139 ZU03
BB
43H 230
29 ZM13
32 ZM08
17 ZP10
AG
44K 237
139 ZU03
GATE C COND PART 2
AE
53 -09C
151 -08C
06D 253
65 -D07
86 -B11
130 -08F
11 -34L
23 ZS03
50 -07C
83 -B07
11 -34L
23 ZS03
86 -B11
89 -D10
LOC. TYPE
A-B3G2 Y702
GATE C COND PART 1
BA
20 ZP02
53 -27L
124 -28L
206 -26H
20 ZP02
123 ZJ12
50 -14H
59 ZB12
130 -13H
304
ALLOW SET C AND Z COND
BC
2 ZG11
26 ZU02
J13
8
32 -M08
140 -26F
5 -G13
145 -26C
230 -26E
2 -G11
35 -G04
237 -29E
28E 332
000 CZ002
123 - RI ADD+SUBTRACT+COMPARE CA002-CC6
253 + GATE C COND PART 2 CZ003-CJ2
139 - OP XXXX X000 XXXX XXXX DN6
CD001 CD002 CS003
304 + GATE C COND PART 1 CZ003-ED4
332 - ALLOW SET C AND Z COND FJ6
CZ004 CZ005
160 + RI+RR-BYTE INST TYPF CZ001-HF2
CONDITION CODES
SET CONDITION GENERATION
E.C.-HISTORY E, MACH.3705
FRAME 01
IBM CORP.SCD CZ002
DATE LAST EC
10-14-80 344270
P.N. 1852857 000

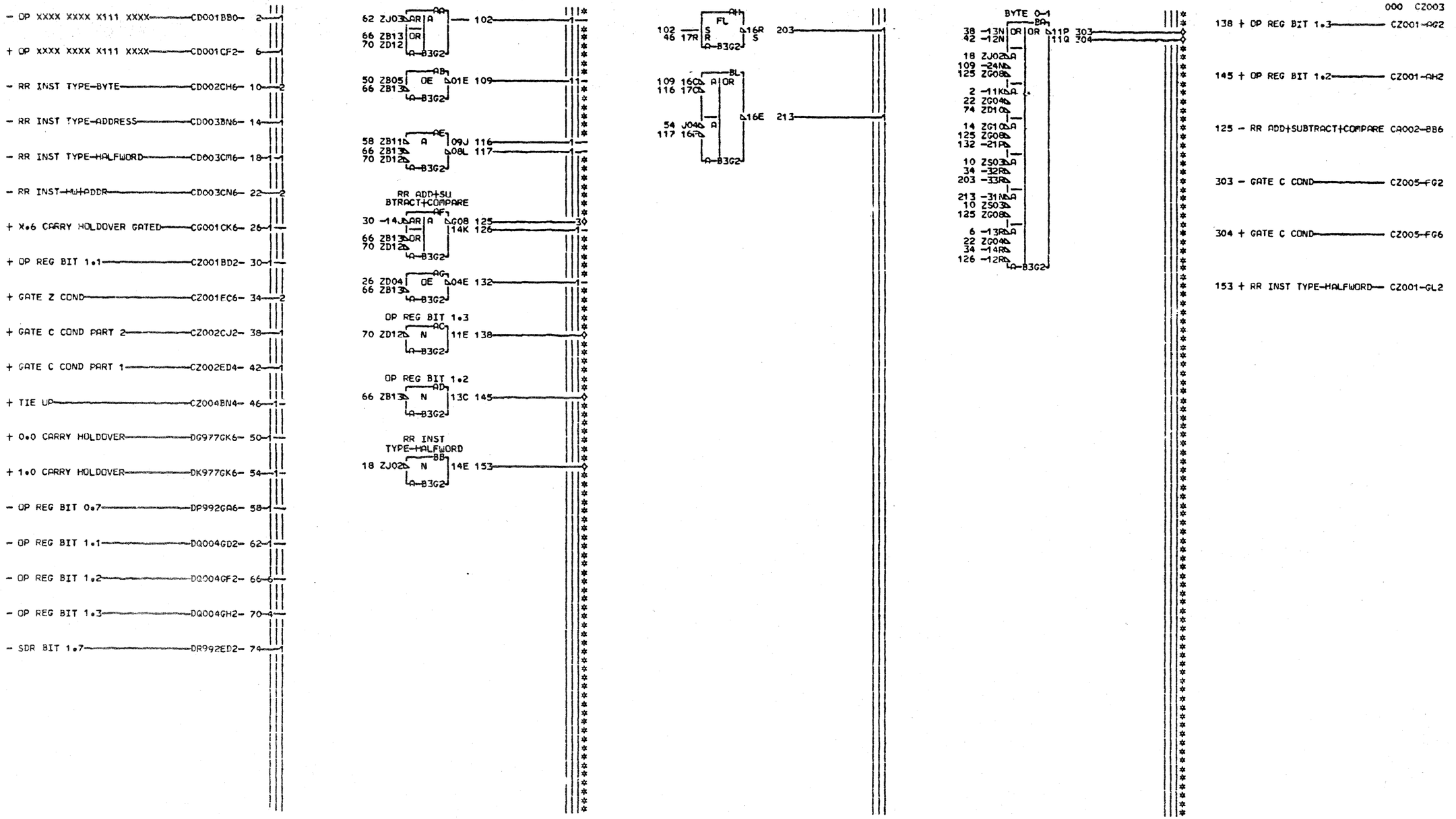

LOC. TYPE
A-B3G2 Y702

CZ003
000

CONDITION CODES
GATE C CONDITION
E.C. HISTORY

MACH.3705
FRAME 01
IBM CORP.SCD CZ003
P.N. 1852858 000

DATE LAST EC
10-14-80 344270

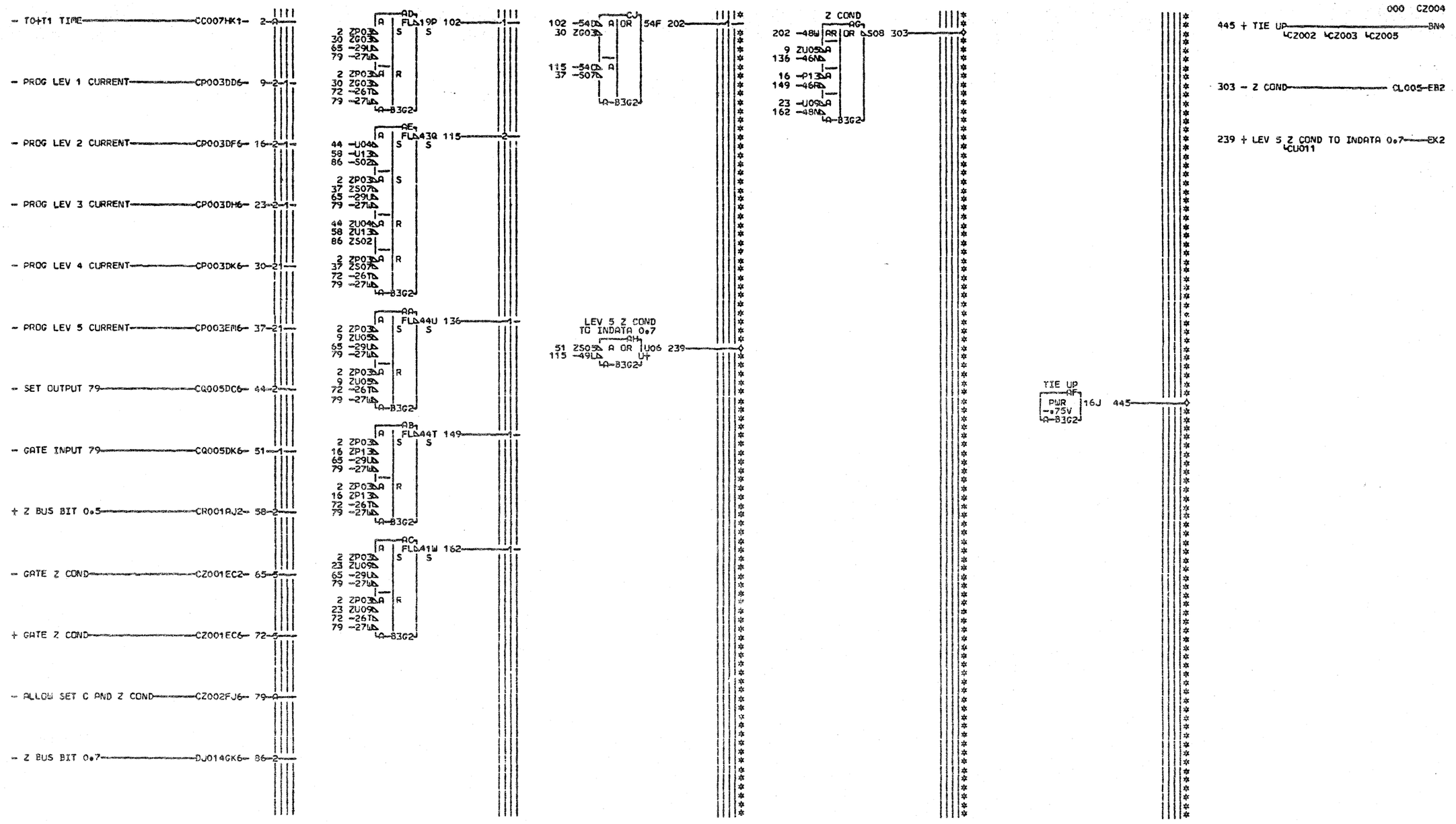
- TOHT1 TIME CC007HK1- 2-A
- PROG LEV 1 CURRENT CP003DD6- 9-2-1
- PROG LEV 2 CURRENT CP003DF6- 16-2-1
- PROG LEV 3 CURRENT CP003DH6- 23-2-1
- PROG LEV 4 CURRENT CP003DK6- 30-2-1
- PROG LEV 5 CURRENT CP003EM6- 37-2-1
- SET OUTPUT 79 CQ005DC6- 44-2
- GATE INPUT 79 CQ005DK6- 51-1
+ Z BUS BIT 0.5 CR001AJ2- 58-2
- GATE Z COND CZ001EC2- 65-5
+ GATE Z COND CZ001EC6- 72-5
- ALLOW SET C AND Z COND CZ002FJ6- 79-A
- Z BUS BIT 0.7 DJ014GK6- 86-2
AD FLA19P 102
AE FLA43Q 115
AA FLA44U 136
AB FLA44T 149
AC FLA41W 162
CJ 54F 202
Z COND
AG S08 303
LEV 5 Z COND TO INDATA 0.7
AH U06 239
AF PWR -.75V 16J 445
A-B3G2
000 CZ004
445 + TIE UP BN4
CZ002 CZ003 CZ005
303 - Z COND CL005-EB2
239 + LEV 5 Z COND TO INDATA 0.7 EK2
CU011
LOC. TYPE
A-B3G2 Y702
CONDITION CODES
Z CONDITION LATCHES
E.C. HISTORY
MACH.3705
FRAME 01
IBM CORP.SCD
P.N. 1852859
DATE LAST EC
10-14-80 344270
CZ004
000

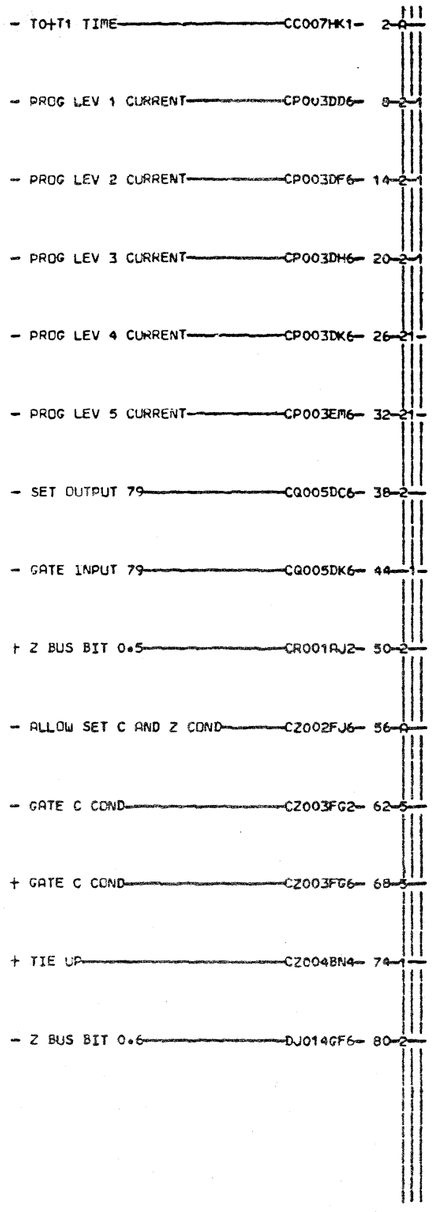

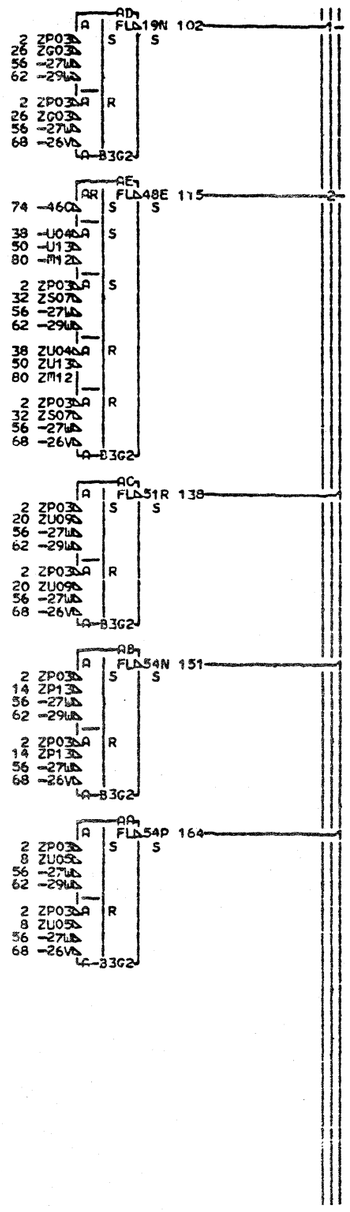

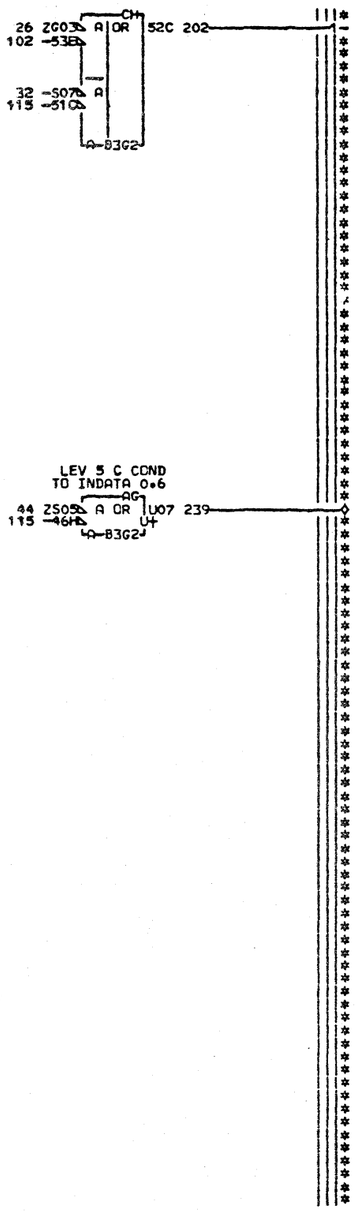

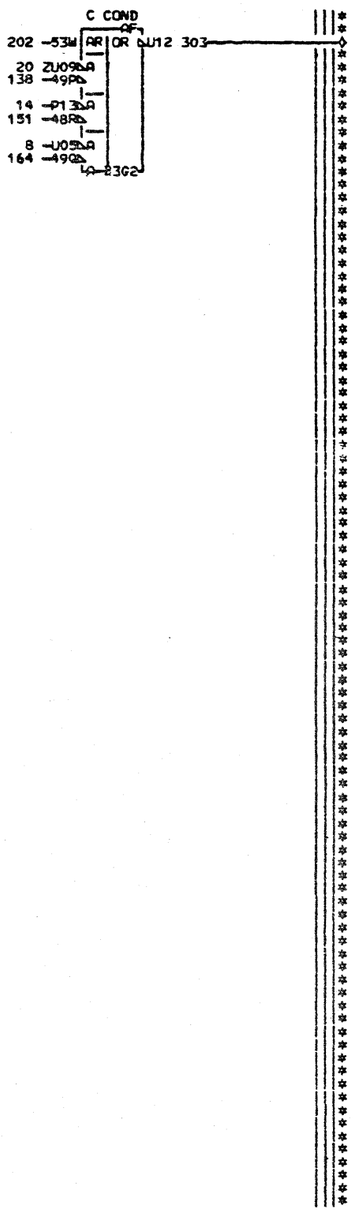

000 CZ005

303 - C COND CL005-DC2

239 + LEV 5 C COND TO INDATA 0.6 EX2
CU011

LOC. TYPE
A-B3G2 Y702

CZ005
000

CONDITION CODES
C CONDITION LATCHES
E.C.-HISTORY E. MACH.3705
FRAME 01
IBM CORP.SCD CZ005
DATE LAST EC 10-14-80 344270
P.N. 1852860 000