CONTROL DATA® 92413-10

CONVERSATIONAL DISPLAY TERMINAL

CC5A2-A/B

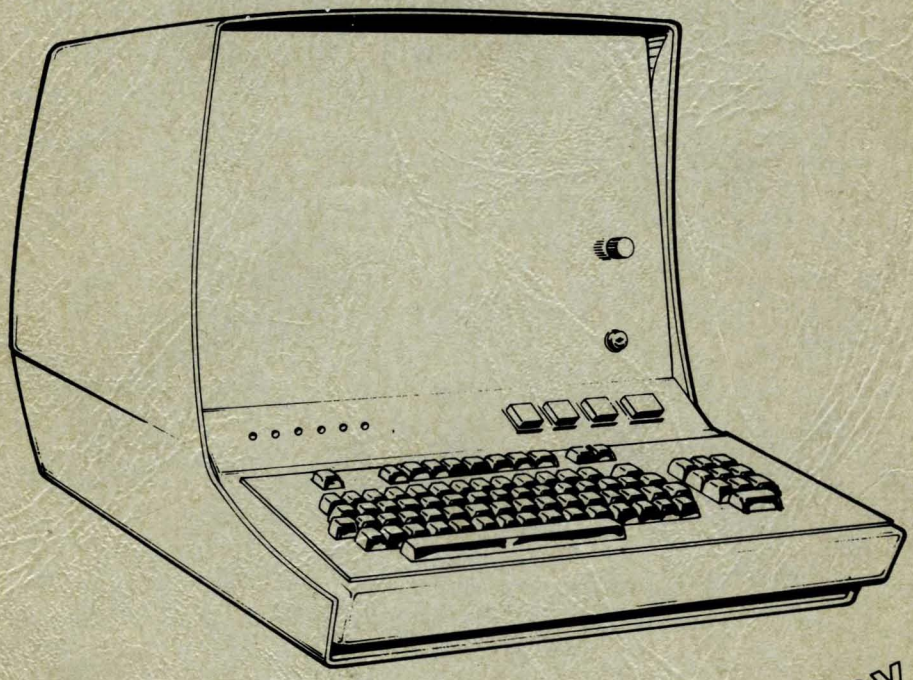

PRELIMINARY

CONTROL DATA CORPORATION

ON-SITE CUSTOMER ENGINEERING MANUAL

CONTROL DATA® 92413-10

CONVERSATIONAL DISPLAY TERMINAL

CC5A2-A/B

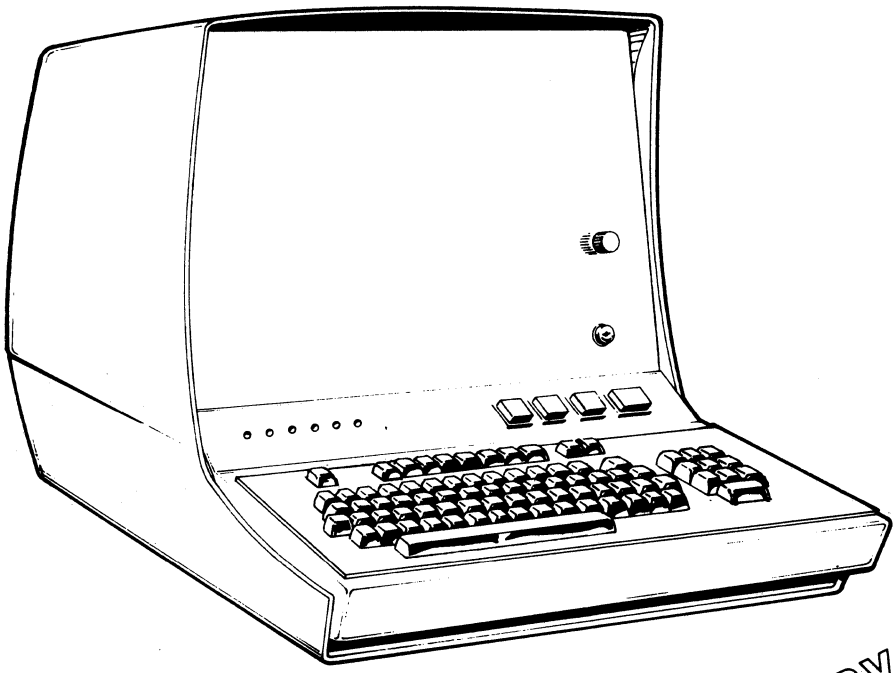

PRELIMINARY

CONTROL DATA CORPORATION

ON-SITE CUSTOMER ENGINEERING MANUAL

92413-10
CONVERSATIONAL DISPLAY TERMINAL
ON-SITE CUSTOMER ENGINEERING MANUAL

REVISION RECORD	
REVISION	**DESCRIPTION**
PD-0 (D1)	Prerelease
(3-31-71)	
PD-1 (D2)	Prerelease (Additions and Changes)
(5-28-71)	
01-0	Preliminary Release
(7-19-71)	
02-0	Manual revised. This printing obsoletes all previous editions.
(7-13-73)	

0784-0A

Publication No.
62048600

Address comments concerning this manual to:

CONTROL DATA CORPORATION
Technical Publications Department
2401 NORTH FAIRVIEW AVENUE
ST. PAUL, MINNESOTA 55113

or use Comment Sheet in the back of this manual.

© 1971, 1973
by Control Data Corporation
Printed in the United States of America

CONFIGURATION INFORMATION

This manual reflects the equipment configurations listed below.

EXPLANATION: Locate the equipment type and series number, as shown on the equipment FCO log, in the list below. Immediately to the right of the series number is an FCO number. If that FCO number and all of the FCO numbers underneath it match all of the FCO numbers on the equipment FCO log, then this manual accurately reflects the equipment.

Equipment Type	Series	With FCO's
CC5A2-A	01	428 (ECO only)
CC5A2-A	02	573 (ECO only)
CC5A2-A	03	

Equipment Type	Series	With FCO's
CC5A2-B	01	428 (ECO only)
CC5A2-B	02	573 (ECO only)
CC5A2-B	03	

FOREWORD

This publication serves as an on-site maintenance manual for servicing the CONTROL DATA® Conversational Display Terminal. The terminal may be equipment CC5A2-A (120 volts, 60 Hertz) or equipment CC5A2-B (208/230 volts, 50 Hertz); each is functionally identical. Either equipment may contain the expanded character memory option defined as equipment CC311-A. The terminal is specifically designed to operate as a remote message I/O device within a central processor controlled telecommunications system.

The terminal provides standard teletypewriter I/O functions and as such becomes a plug-in replacement for teletypewriter remote terminals. An output channel is contained in the terminal to enable use of an optional printer to obtain hardcopy of displayed messages.

This manual consists of nine sections. General Description — defines the Conversational Display Terminal and describes typical applications. Operation — describes controls and operating procedures. Installation and Checkout — describes the procedures for placing the terminal in service. Theory of Operation — describes the functional theory of the operation of a Conversational Display Terminal. Diagrams — provides diagrams showing signal interconnections, display terminal configuration, and power distribution. Maintenance — describes preventive and corrective maintenance procedures. Troubleshooting — provides methods for isolating faulty modules in the display terminal. Parts Data — provides identification of components. Spare Parts Data — describes those parts to be kept as spares for terminal repair.

Additional copies of this manual may be ordered from:

Control Data Corporation
Literature and Distribution Services
8100 34th Avenue South, P.O. Box 0
Minneapolis, Minnesota 55440

CONTENTS

Section			Page
1	—	GENERAL DESCRIPTION	
		Features	1-2
		Optional Features	1-2
		Typical System Application	1-3
		Physical, Electrical, and Environmental Data	1-3
2	—	OPERATION	
		Display Terminal Modules	2-1
		TV Display Module	2-1
		Logic Module	2-2
		Character Memory	2-4
		Control Logic	2-4
		Interface Circuits	2-4
		Transmit Data	2-5
		Receive Data	2-5
		Request to Send	2-5
		Clear to Send	2-6
		Data Set Ready	2-6
		Signal Ground	2-6
		Data Terminal Ready	2-6
		Printer Output Channel	2-6
		Data	2-7
		Clock	2-9
		Active	2-9
		Strobe	2-9
		Busy	2-9
		Ground	2-10
		Keyboard Module	2-10
		Power Supply Module	2-12
		Controls and Indicators	2-13
		Operator Controls and Indicators	2-13
		Maintenance Controls and Indicators	2-17
		Applying Power to Terminal	2-18

Section | Page

Data Entry 2-18
Cursor 2-18
Keyboard 2-19
Message Editing 2-21
Cursor Control 2-21
RESET Key. 2-21
RETURN Key 2-21
← (Backspace) Key. 2-21
→ (Skip) Key. 2-22
↑ (Cursor Up) Key 2-22
↓ (Line Feed) Key 2-22
Line Clear and Clear 2-22
LINE CLEAR Key 2-22
CLEAR Key 2-23
Display Operation Mode. 2-23
Inverse Video. 2-23
Options. 2-24
16-Line x 80-Character Display Format 2-24
Hardcopy Receive-Only Printer 2-24
Printer On-Line Mode 2-25
Printer Off-Line Mode 2-25

3 — INSTALLATION AND CHECKOUT

Crating 3-1
Uncrating. 3-1
Installation 3-7
Installation Procedures. 3-7
Cable Connections 3-9
Data Set Cable 3-9
Printer Cable 3-9
Power Cable. 3-10
Checkout. 3-11
User Instructions 3-13

4 — THEORY OF OPERATION

Module Functions. 4-1
Logic Module 4-1
TV Module 4-3
Keyboard 4-4
Logic Functions. 4-4
Read/Write Memory. 4-4

Section Page

Data Control Gates 4-5
Disassembly Register 4-5
Assembly Register 4-5
Duplex Control 4-6
Video Serializer 4-6
Inverse Video Control Circuit 4-6
Composite Video Driver Circuit 4-6
Parity Check Circuit 4-6
Printer Control 4-7
Printer Interface 4-7
Interface Circuits 4-7
Receive Interface 4-7
Transmit Interface 4-7
Remote Operating Mode 4-7
Local Operating Mode 4-8
Control and Indicator Functions 4-8
PRINTER ON LINE Switch/Indicator 4-8
PRINT Key 4-8
PRTR BUSY (Printer Busy) 4-9
PRTR ACT (Printer Active) 4-9
DSR (Data Set Ready) 4-9
CTS (Clear To Send) 4-9
Keylock Switch 4-9
Baud Rate Switch 4-9
Data Routing 4-10
Keyboard Data Entry 4-10
Remote Data Entry 4-11
Data Transaction 4-11

5 —— DIAGRAMS 5-1

6 —— MAINTENANCE

Safety Procedures and Precautions 6-1
Safety Procedures 6-1
Safety Precautions 6-2
Preventive Maintenance 6-2
Corrective Maintenance 6-3
Power Supply Module and Adjustments 6-3
TV Module Adjustments 6-3
Adjustment Controls 6-7
Contrast 6-7
Vertical Hold 6-8
Horizontal Hold 6-8
Focus 6-8

Section | Page

Vertical Size 6-9
Vertical Linearity 6-9
Yoke 6-9
Raster Centering 6-9
Horizontal Size 6-9
Remove and Replace Procedures 6-21
Cabinet Hood 6-21
Power Supply Module 6-22
Logic Module 6-23
TV Module 6-24
Keyboard Module 6-25
Display Faceplate 6-26
Power Cable Connections 6-27
Signal Cable Connections 6-29
Keyboard 6-29
TV Module 6-29
Interface 6-29
Miscellaneous Field Spare Parts 6-29

7 — TROUBLESHOOTING

Troubleshooting Philosophy 7-1
Fault Isolation 7-1
Master Clear 7-3
Voltage Adjustment 7-3
Module Removal and Replacement Procedures 7-3
Fault Isolation Procedures 7-3

8 — PARTS DATA

Genealogy Charts 8-2
Assemblies 8-2
Genealogy Chart (CC5A2-A) 8-3/8-4
Genealogy Chart (CC5A2-B) 8-5
Display Station (80 x 8) 120 Volt (4 sheets) 8-6
Display Station (80 x 8) 208/230 Volt (4 sheets) 8-14
Connector Panel Assembly (120 Volt) 8-22
Connector Panel Assembly (208/230 Volts) 8-26
Panel Assembly (Viewing) 8-30
Control Assembly 8-32
Signal Jumper Cable Assembly 8-34
AC Power Cable Assembly 8-36
CRT Power Cable Assembly 8-38
DC Power Cable Assembly 8-40

Section — Page

Cable Set 713 LCDH 8-43
Data Set Cable Assy (External). 8-44
Interconnect Cable Assembly. 8-46
AC Power Jumper Cable 8-48

9 — SPARE PARTS DATA 9-1

FIGURES

Section — Figure — Page

1 — GENERAL DESCRIPTION

1-1 Conversational Display Terminal 1-1
1-2 Typical Processor/Terminal Communications System . . . 1-3

2 — OPERATION

2-1 Terminal Functional Block Diagram 2-2
2-2 Module Locations 2-3
2-3 Modem Interface Signals 2-5
2-4 Terminal/Printer Interface 2-7
2-5 Printer Channel I/O Signals 2-8
2-6 Keyboard 2-10
2-7 Foldback Under Full Load to Short-Circuit Current . . . 2-13
2-8 Front, Operator Control, and Keyboard Panels 2-14
2-9 Connector Panel (Basic Terminal, 220 Volts) 2-14
2-10 Cursor Display. 2-19
2-11 Display Scroll Operation (8-Line Basic Display) 2-20
2-12 Inverse Video 2-23
2-13 Display Format Option 2-24

3 — INSTALLATION AND CHECKOUT

3-1 Display Terminal Packaging 3-2
3-2 Video Display Module Packaging. 3-3
3-3 Display Logic Module Packaging 3-4

Section	Figure		Page
	3-4	Display Power Supply Packaging	3-5
	3-5	Keyboard Packaging	3-6
	3-6	Installation Procedures	3-8
	3-7	Connector Panel	3-9
	3-8	Printer Cable Interconnect	3-10
	3-9	Data Set Connector	3-12
4 —		THEORY OF OPERATION	
	4-1	Character Dot Formations on Scan Lines	4-2
	4-2	Data Routing Block Diagram	4-10
5 —		DIAGRAMS	
	5-1	Signal Interconnection Diagram	5-2
	5-2	Display Terminal Configuration	5-3
	5-3	Power Distribution (120-Volt Model)	5-4
	5-4	Power Distribution (240-Volt Model)	5-5
6 —		MAINTENANCE	
	6-1	Power Supply Adjustments	6-4
	6-2	TV Module	6-5
	6-3	TV Module Adjustment Locations	6-5
	6-4	Normal Test Pattern	6-6
	6-5	Contrast Too High	6-10
	6-6	Contrast Too Low	6-11
	6-7	Vertical Scanning Not Synchronized (Slips Frames)	6-12
	6-8	Vertical Scanning Not Synchronized (Rolls)	6-13
	6-9	Horizontal Scanning Not Synchronized (Tears Horizontally	6-14
	6-10	Effects of Incorrect Focusing Adjustment	6-15
	6-11	Vertical Size Incorrectly Adjusted	6-16
	6-12	Vertical Linearity Incorrectly Adjusted	6-17
	6-13	Yoke Incorrectly Adjusted	6-18
	6-14	Raster Centering Incorrectly Adjusted	6-19
	6-15	Horizontal Size Incorrectly Adjusted	6-20
	6-16	Cabinet Hood Mounting	6-21
	6-17	Power Supply Module Mounting	6-22
	6-18	Logic Module Mounting	6-23
	6-19	TV Module Mounting	6-24
	6-20	Keyboard Module Mounting	6-25
	6-21	Display Faceplate Mounting	6-26

Section	Figure		Page
	6-22	Power Supply-Logic Module Cabling	6-27
	6-23	Power Cable Interconnections	6-28
	6-24	Signal Cable Interconnections	6-30
7 —		TROUBLESHOOTING	
	7-1	Display Terminal Modules	7-2
	7-2	Vertical Blanking Bar	7-6

TABLES

Section	Table		Page
2 —		OPERATION	
	2-1	Displayable Character Repertoire	2-11
	2-2	Control Function Repertoire	2-12
	2-3	Operator Controls and Indicators	2-15
	2-4	Maintenance Controls and Indicators	2-17
6 —		MAINTENANCE	
	6-1	TV Module Adjustment Controls	6-7
7 —		TROUBLESHOOTING	
	7-1	Fault Isolation Chart	7-4
8 —		PARTS DATA	
	8-1	Explanation of Drawing Column Headings	8-1

SECTION 1

GENERAL DESCRIPTION

This section defines the Conversational Display Terminal, figure 1-1, and typical applications. This equipment replaces teletypewriter remote terminals on either leased or dial telephone lines. It provides a fast, quiet, video telecommunications terminal which provides the operator with composition versatility not possible with a conventional teletypewriter terminal. The terminal is designed for teletypewriter communications system compatibility and is ready for immediate use with EIA Standard RS-232-C data sets (modems) which operate in asynchronous mode up to 300 bps and are equivalent to the AT&T 103 Series.

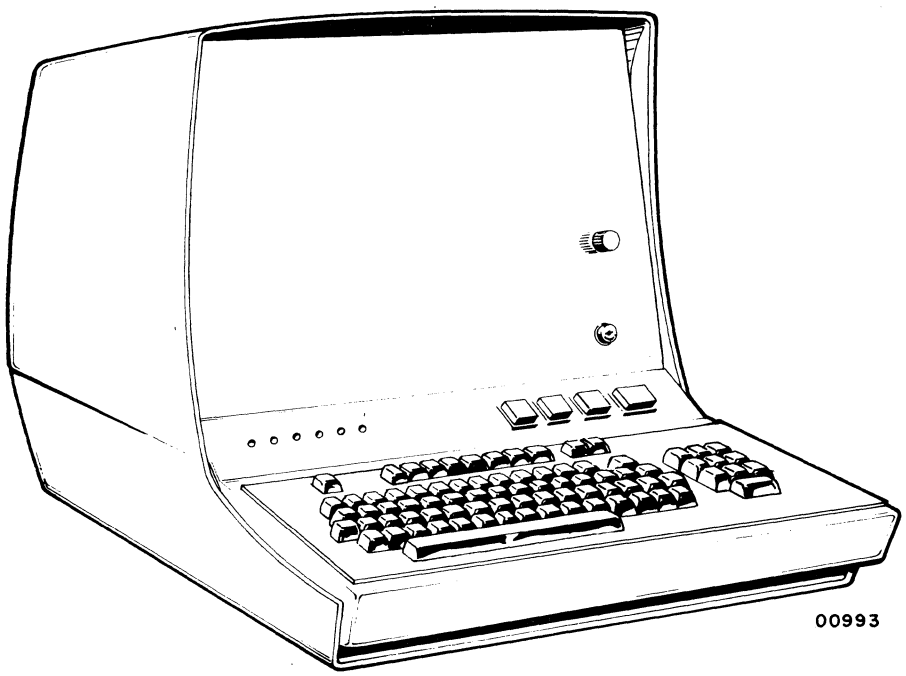

Figure 1-1. Conversational Display Terminal

FEATURES

The terminal contains the following important features:

- Standard teletypewriter keyboard layout with simplified tri-level operation and additional convenience controls.
- Quiet, reliable magnetic-reed-switch keyboard.
- 96 ASCII alphanumeric and symbol selection.
- 32 ASCII control codes.
- Scroll and page format.
- Nondestructive blinking cursor (underline dash).
- Cursor control for up, down, left, right, and home.
- Inverse video (black on white) where desired.
- Display character size 1/4 inch high by 1/8 inch wide (nominal) formed by 5 x 9 dot matrix using a standard 262-line television raster.
- 8 lines of 80 characters.
- 60-Hz display refresh rate with 120-volt, 60-Hz terminal; 50-Hz display refresh rate with 208-/230-volt, 50-Hz terminal.
- Metal oxide semiconductor memory (MOS).
- RS-232-C interface capable of asynchronous data transmission at 75, 110, 150, and 300 bps.
- Switch selections for full or half duplex; odd, even, or mark parity; keyboard lockout; remote or local mode; scroll or page format; baud rate.
- Output channel for hardcopy printer.

OPTIONAL FEATURES

The terminal may contain the following optional features:

- Modular character-memory expansion of additional 640 characters — easy field installation. This provides a display with 16 lines of 80 characters.
- Hardcopy printer.

TYPICAL SYSTEM APPLICATION

The terminal will operate as a remote terminal in communications systems which provide AT&T 103 Series (or equivalent) modem interface for two-way communication. The interface provides terminal operation in a time-sharing, central-processor-controlled communications system as shown in figure 1-2. Communications are performed in a serial character-by-character fashion without "block" transfers.

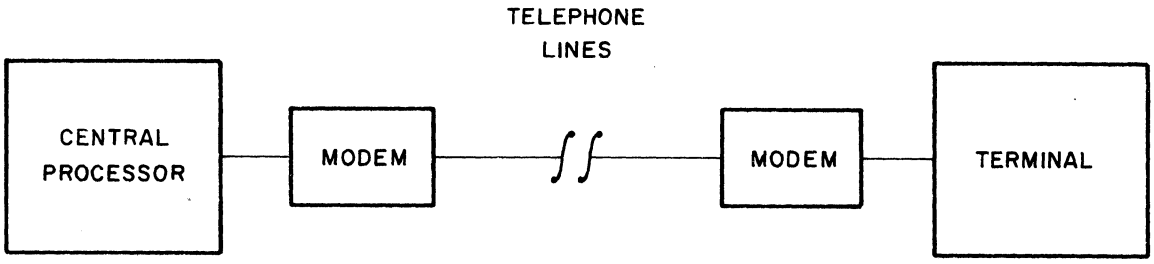

Figure 1-2. Typical Processor/Terminal Communications System

PHYSICAL, ELECTRICAL, AND ENVIRONMENTAL DATA

Dimensions and Weight

Height: 18 in. (46 cm)
Width: 18 in. (46 cm)
Depth: 29 in. (74 cm)
Weight: 75 lb (34 kg)

Power Requirements

• CC5A2-A	• CC5A2-B
120 volts	208/230 volts
60 Hz	50 Hz
1.50 amp max	0.75 amp max

Environmental Specifications

Operating Temperature: +40° to +120°F (+4° to +49°C)
Operating Humidity: 10% to 90% - no condensation
Operating Altitude: -1000 to +10,000 ft (-305 to +3048m)
Storage Temperature: -30° to +150°F (-34° to +66°C)
Storage Humidity: 5% to 95% - no condensation
Storage Altitude: -1000 to +15,000 ft (-305 to +4572m)

Heat Dissipation

582 Btu/hr (146.6 kg-cal/hr)

SECTION 2

OPERATION

This section contains a basic operational description of the terminal and is intended to acquaint the reader with the functional and manual operations of the equipment. Topics covered are: functional operation of display modules (internal and interface), operator controls and indicators, maintenance controls and indicators, applying power, data entry, and options.

DISPLAY TERMINAL MODULES

The Conversational Display Terminal contains four replaceable modules. These modules may be replaced in the field. Figure 2-1 is a block diagram showing the logical relationship of the modules. Figure 2-2 shows the location of these modules in the display terminal.

- TV display module
- Logic module
- Keyboard module
- Power supply

The following paragraphs describe the functions of each module.

TV DISPLAY MODULE

The display portion of the terminal consists of a field-replaceable, high resolution television display module. Control of the video display comes from the character memory and the associated control logic. The basic display terminal displays 8 lines of 80 characters on a rectangular CRT with a 15-inch (38 cm) diagonal. The viewing area is 9-1/4 inches (23.5 cm) by 5-1/4 inches (13.5 cm) for both the 8 lines of 80 characters in the basic display and the 16 lines of 80 characters with the expanded memory option. Characters appearing on the display screen are formed with a 5- by 9-dot matrix which is selectively blanked or unblanked during a normal television raster scan of 262 horizontal lines for the 60-Hz terminal and 314 horizontal lines for the 50-Hz terminal. Nominal character size is 1/8 inch (0.3 cm) wide by 1/4 inch (0.6 cm) high. A cursor (entry marker) appears on the display screen as a

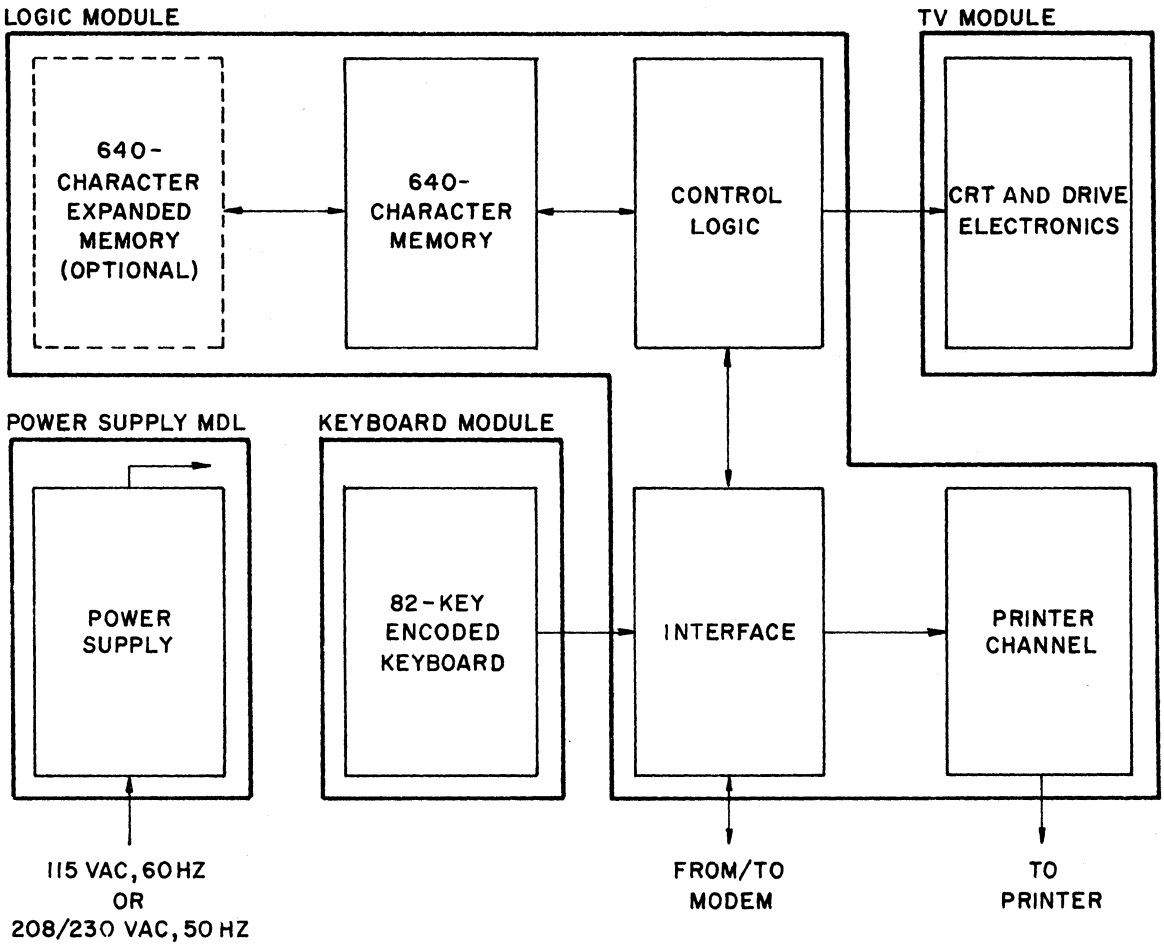

Figure 2-1. Terminal Functional Block Diagram

blinking underline dash to indicate the position where the next character will display on the screen. To maintain a good character image on the screen, the complete screen display is repeated or refreshed 60 times a second for the 120-volt display terminal model and 50 times a second for the 220-volt display terminal model.

LOGIC MODULE

The logic module is designed to be replaced in the field. It contains four circuit cards: character memory, control logic, interface circuits, and printer output channel.

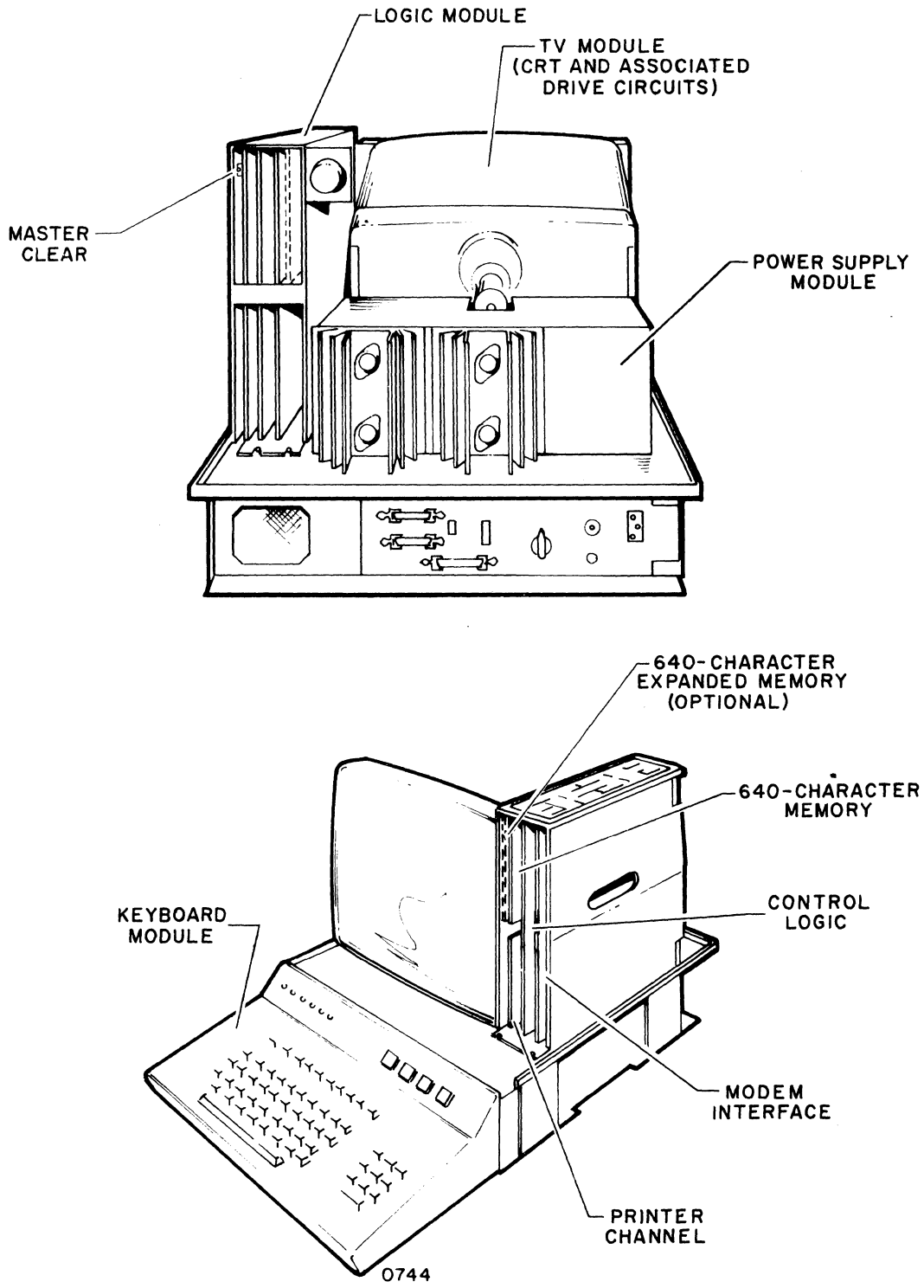

Figure 2-2. Module Locations

Character Memory

The character memory is a circuit card located within the logic module. This card contains a metal oxide semiconductor (MOS) memory for storage of 640 seven-bit character codes providing display refresh and input/output data. The basic terminal contains one memory card for the display of 8 lines of 80 characters; a second card may be added in the field as an option allowing the display of 16 lines of 80 characters each.

Control Logic

The control logic is contained on a circuit card within the logic module. This circuit card provides the timing and sequencing circuits for the display terminal and a 256-word, 10-bit MOS read-only memory (ROM). This memory is programmed with the beam blank/unblank dot patterns for video formation of all displayable characters on the display screen.

Interface Circuits

The asynchronous interface circuits control all data routing within the terminal and between the terminal and the communications modem. These circuits are contained on two circuit cards within the logic module.

Data and control function routing performed by the interface circuits between the keyboard, modem, control, and printer channel depends on the settings of the transmission and printer control switches described in this section.

The interface circuits are designed to operate with communications signals compatible to EIA Standard RS-232-C, such as the AT&T 103 Series data sets, or equivalent. This type of modem communicates word-by-word with 8-bit serial data words (including parity). The interface communicates at manually selectable transmission rates of 75, 110, 150, and 300 bits per second. The circuits do all serial-to-parallel and parallel-to-serial conversion, perform all modem control, and during transmission perform the data-clocking function and parity checking (if any).

Figure 2-3 shows the signals required for communication between the modem interface connector located on the back panel of the terminal and an AT&T 103 Series (or equivalent) modem. The maximum cable length allowable for any of these signals is 50 feet. The following paragraphs define these signals and their operable voltage levels.

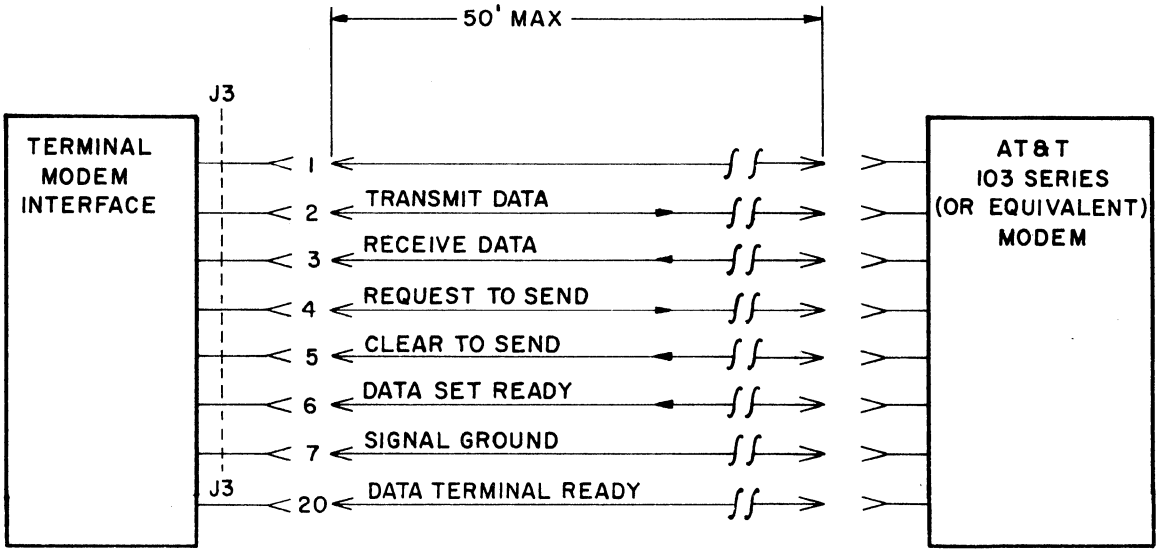

Figure 2-3. Modem Interface Signals

Transmit Data

Data travels from the terminal interface circuits to the modem via the transmit data line. When the interface is not transmitting data, the terminal holds the transmit data line to a logical 1 (more negative than -3 volts).

Receive Data

Data travels from the modem to the terminal interface circuits via the receive data line. When the modem is not transferring data to the terminal, the modem holds the receive data line to a logical 1 (more negative than -3 volts).

Request to Send

The terminal interface circuit sends a request to send signal to initiate a transmit operation. A clear to send signal must be received by the terminal before transmission begins. Receipt of this signal is indicated by the clear to send (CTS) indicator.

Clear to Send

In reponse to the request to send signal, the modem establishes contact with remote equipment. After this contact is established, a clear to send signal is sent to the terminal, lighting the CTS indicator.

Data Set Ready

The modem makes this signal line active (more positive than +3 volts) when the modem is in the data mode. This means that the modem is not in the idle or talk mode, nor is it without power.

Signal Ground

This signal is the voltage base from which the control and data signal voltage levels are referenced.

Data Terminal Ready

When power is applied to the terminal, the data terminal ready line becomes active (more positive than +3 volts), indicating to the modem that the terminal has power on and is able to send and receive data.

Printer Output Channel

An output channel contained on the interface circuit card allows the use of a printer for producing a hard copy of displayed messages. The printer channel presents data to a printer on a 7-bit ASCII character word basis, bit-by-bit serially. Printer controls included in the terminal allow transfer to the printer of either a full display screen of characters or each character as it is entered at the display keyboard. All character codes 040_8 through 176_8 and the backspace (010_8), line feed (012_8), and return (015_8) are intended for a printer. These controls are described in this section. The printer output channel contains printer-in-use recognition circuits and indicators which signify to the operator when another terminal is using the printer. These circuits allow one printer to be used by up to eight display terminals.

Presence of a printer does not affect operation of the basic (8 line x 80 character) terminal or the expanded line option (16 line x 80 character) configuration as described in the preceding portion of this manual, except that during a printer operation, the keyboard is disabled and the printer channel I/O signals are used by the terminal interface and control circuits to sequence displayable data codes to the printer.

Two printer interface connectors are located at the rear of the terminal on the connector panel. These two connectors are wired internally in a daisy-chain fashion with pin 1 of J1 connected to pin 1 of J2, pin 2 of J1 connected to pin 2 of J2, etc. This allows the terminal to be connected with as many as seven other terminals to a single printer (see figure 2-4). The maximum cable length that can be used in any printer application is 1500 feet. Figure 2-5 identifies the required printer interface signals. The communication technique is a bidirectional, differential, long-line driver/receiver combination with each interface signal requiring a negative (-) and a positive (+) line in a twisted pair as shown in figure 2-5. The following paragraphs describe printer interface line functions.

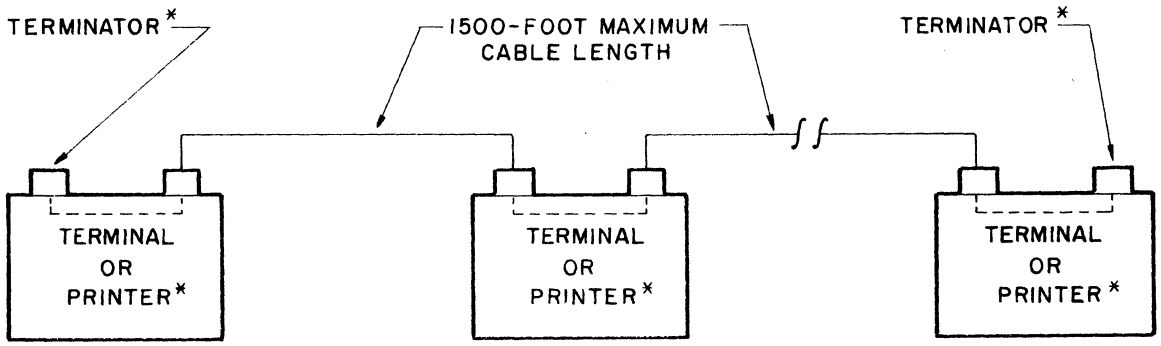

*FROM ONE TO EIGHT TERMINALS MAY SHARE ONE PRINTER. PRINTER MAY BE LOCATED BETWEEN TERMINALS ON THE INTERFACE LINE OR ON EITHER END. TERMINATOR BLOCKS MUST BE INSTALLED ON THE SPARE CONNECTOR OF THE DEVICE (TERMINAL OR PRINTER) LOCATED ON EACH END OF THE INTERFACE.

Figure 2-4. Terminal/Printer Interface

Data

Changing states of the positive (+) and negative (-) line pair signify binary bits of the ASCII compatible codes used for data transmission to the printer.

Data bit "1" condition. . . . Pin 1 + current sinking
Pin 9 - open
Data bit "0" condition. . . . Pin 1 + open
Pin 9 - current sinking

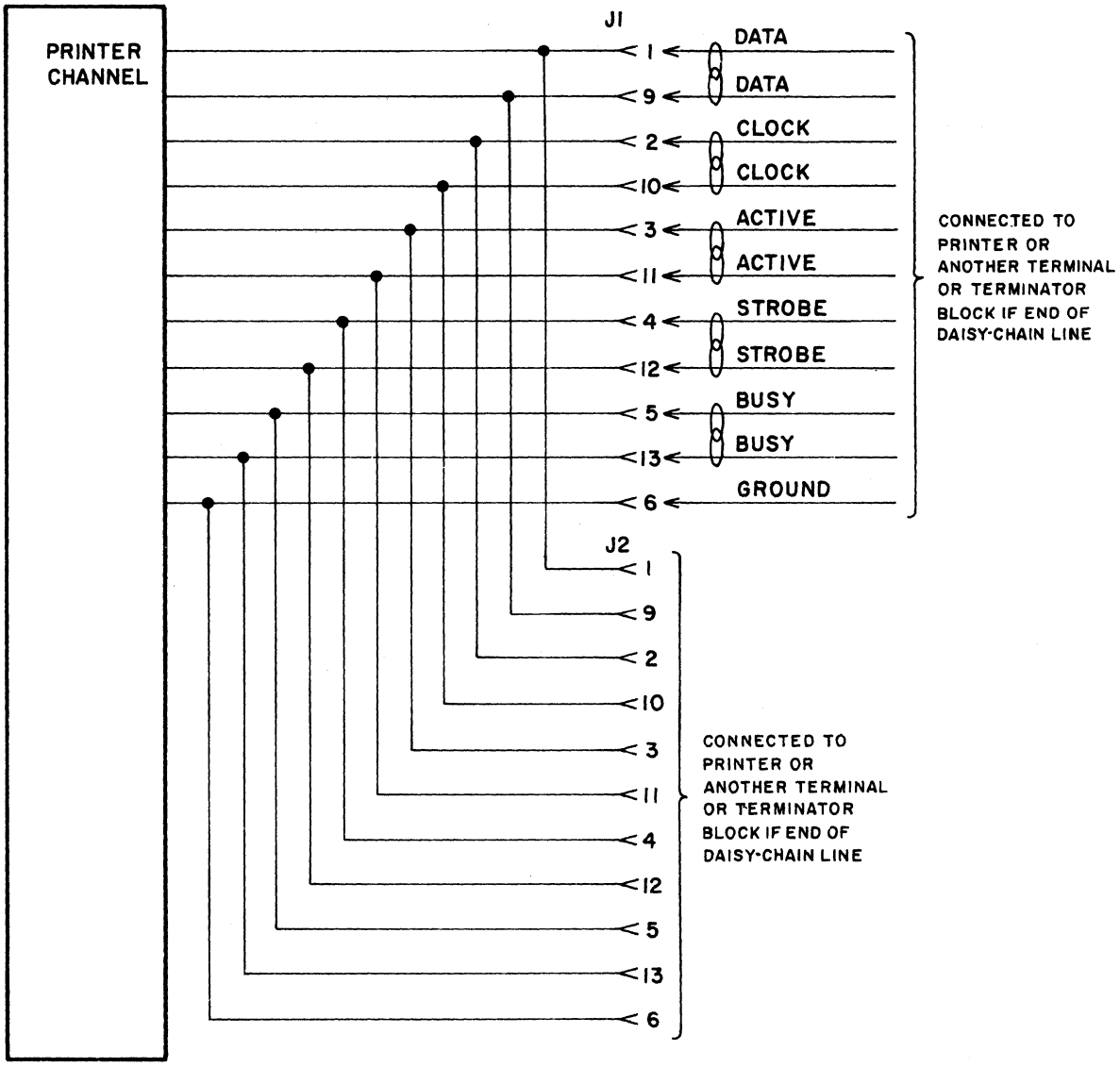

Figure 2-5. Printer Channel I/O Signals

Clock

The terminal issues a clock signal via the clock line pair whenever a data bit on the data line pair has stabilized. The clock signal commands the printer to sample the data line pair for a valid data bit.

Clock (logic "1" condition)	Pin 2+ current sinking Pin 10- open
Not Clock (logic "0" condition) . .	Pin 2+ open Pin 10- current sinking

Active

The active line pair indicates that one of the terminals is using the printer. The terminal using the printer places the active line in a "being used" condition so that other terminals connected to the printer will recognize that the printer is in use and not accessible to them.

Active (logic "1" condition)	Pin 3+ current sinking Pin 11- open
Not Active (logic "0" condition) . .	Pin 3+ open Pin 11- current sinking

Strobe

The terminal issues a strobe signal via the strobe line pair after sending to the printer all seven data bits of ASCII code and the clock signals. The strobe signal commands the printer to translate and execute the complete data word it has just received.

Strobe (logic "1" condition)	Pin 4+ current sinking Pin 12- open
Not Strobe (logic "0" condition) . .	Pin 4+ open Pin 12- current sinking

Busy

The printer uses the busy line pair to indicate to all connected terminals that it is busy internally (during print head return, etc.) and cannot receive data.

Busy (logic "1" condition).	Pin 5- open Pin 13+ current sinking
Not Busy (logic "0" condition). .	Pin 5- current sinking Pin 13+ open

Ground

The ground signal line establishes a common reference ground for signal levels between terminals and the printer. Pin 6 carries the ground.

KEYBOARD MODULE

The keyboard, figure 2-6, is the operator input device for the terminal. The keys are magnetic reed type. The keyboard module supplies 7-bit ASCII codes and operator initiated control signals to the terminal circuits. The character set available is indicated in table 2-1, Displayable Character Repertoire. Table 2-2 lists the Control Function Repertoire.

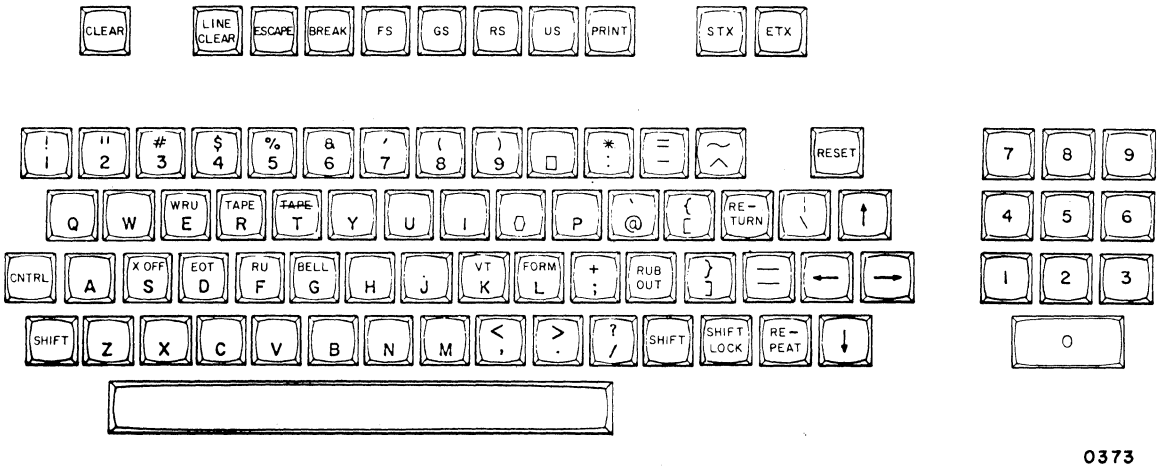

Figure 2-6. Keyboard

The keyboard contains 48 alphanumeric/symbol keys, a cluster of 10 numeric keys, 10 message editing keys, and five special function keys. Pressing any character key, editing key, or function key causes generation of a unique 7-bit code determined by hardware for that key. If a second key is pressed while the first key is still down, the second key will generate its code only after the first key is released. Teletypewriter function codes are available with CNTRL + key. Frequently used communications and edit functions are available from their own key in addition to basic CNTRL + key operation.

TABLE 2-1. DISPLAYABLE CHARACTER REPERTOIRE

OCTAL CODE	CHARACTER	OCTAL CODE	CHARACTER
040	Space	120	P
041	! Exclamation Point	121	Q
042	" Quotation Mark (Diaeresis)	122	R
043	# Number Sign	123	S
044	$ Dollar Sign	124	T
045	% Percent	125	U
046	& Ampersand	126	V
047	' Apostrophe (Closing Single Quotation Mark, Acute Accent)	127	W
		130	X
050	(Opening Parenthesis	131	Y
051	) Closing Parenthesis	132	Z
052	* Asterisk	133	[Opening Bracket
053	+ Plus	134	\ Reverse Slant
054	, Comma (Cedilla)	135	] Closing Bracket
055	- Hyphen (Minus)	136	^ Circumflex
056	. Period (Decimal)	137	_ Underline
057	/ Slant	140	` Grave Accent (Opening Single Quotation Mark)
060	0		
061	1	141	a
062	2	142	b
063	3	143	c
064	4	144	d
065	5	145	e
066	6	146	f
067	7	147	g
070	8	150	h
071	9	151	i
072	: Colon	152	j
073	; Semicolon	153	k
074	< Less Than	154	l
075	= Equals	155	m
076	> Greater Than	156	n
077	? Question Mark	157	o
100	@ Commercial At	160	p
101	A	161	q
102	B	162	r
103	C	163	s
104	D	164	t
105	E	165	u
106	F	166	v
107	G	167	w
110	H	170	x
111	I	171	y
112	J	172	z
113	K	173	{ Opening Brace
114	L	174	| Vertical Line
115	M	175	} Closing Brace
116	N	176	~ Equivalent or Similar
117	O		

OCTAL CODE	SPECIAL SYMBOLS	OCTAL CODE	SPECIAL SYMBOLS
177	▮ Parity Error or Rub Out	016	❮ Begin Inverse
003	▲ ETX or Print	017	❯ End Inverse

TABLE 2-2. CONTROL FUNCTION REPERTOIRE

MNEMONIC	OCTAL CODE	KEYBOARD OPERATION	MNEMONIC	OCTAL CODE	KEYBOARD OPERATION
NUL	000	CNTRL + @	DLE	020	CNTRL + P
SOH	001	A	DC1	021	Q
STX	002	B or STX	DC2	022	R
• ETX ♦	003	C or ETX	DC3	023	S
EOT	004	D	DC4	024	T
ENQ	005	E	• Skip	025	U or →
ACK	006	F	• Line Clear	026	V or LINE CLEAR
BEL	007	G	ETB	027	W
• BS	010	H or ←	• Clear	030	X or CLEAR
HT	011	I	• Reset	031	Y or RESET
• LF	012	J or ↓	• Cursor Up	032	Z or ↑
VT	013	K	ESC	033	[or ESCAPE
FF	014	L	FS	034	\ or FS
• CR	015	M or RETURN	GS	035	] or GS
• SO♦	016	N	RS	036	^ or RS
• SI ♦	017	CNTRL + O	US	037	CNTRL + _ or US

• Causes a display operation; all other control functions are ignored by the display.

♦ Causes displayable character.

POWER SUPPLY MODULE

The power supply module in equipment CC5A2-A uses 120-volt, 60-Hz primary power to supply internal power requirements of +5 vdc, - 12 vdc, +12 vdc, +73 vdc, and 6.3 vac. The power supply of the CC5A2-B equipment uses 208-/230-volt, 50-Hz primary power to provide the same internal power requirements. The control logic and keyboard use +5 vdc. The keyboard also uses - 12 vdc. The +12 vdc drives the character refresh memory. The +73 vdc drives the TV module circuits. Current for the CRT heater element is supplied by the 6.3 vac. The power supply is an on-site replaceable module and should normally be returned to a repair depot for any necessary repairs.

The power supply has a transformer input with a full-wave, solid-state rectifier and has linear regulation with foldback current limiting. A separate integrated-circuit regulator controls the current flow of a series-pass transistor for the +5-volt, +12-volt, and -12-volt circuits. A discrete regulator controls the current flow of the series-pass transistor in the +73-volt circuit. Each regulator senses the output voltage of its circuit through a voltage divider. The circuit compares this voltage with a reference voltage and changes the current input to the pass transistor to maintain a constant output voltage.

If a short circuit occurs in the load of any regulator, a current-limiting transistor in the regulator circuit becomes forward biased. The result is a reduction of the current through the series-pass output transistor. This, in turn, reduces the output voltage.

In the +5-volt regulator circuit, an overvoltage-protect circuit limits the current when the voltage rises beyond a predetermined value. If the output voltage rises above 6.2 volts, a sense circuit turns on a silicon-controlled rectifier (SCR) which causes the regulator to limit the output current. In this same regulator, if one of the two series-pass transistors shorts, the SCR causes the fuse in the collector circuits of that transistor to open.

Figure 2-7 shows the effect of the foldback current limiting. Circuit design provides that when a predetermined current limit of 150 percent is reached, the current begins to decrease (fold back).

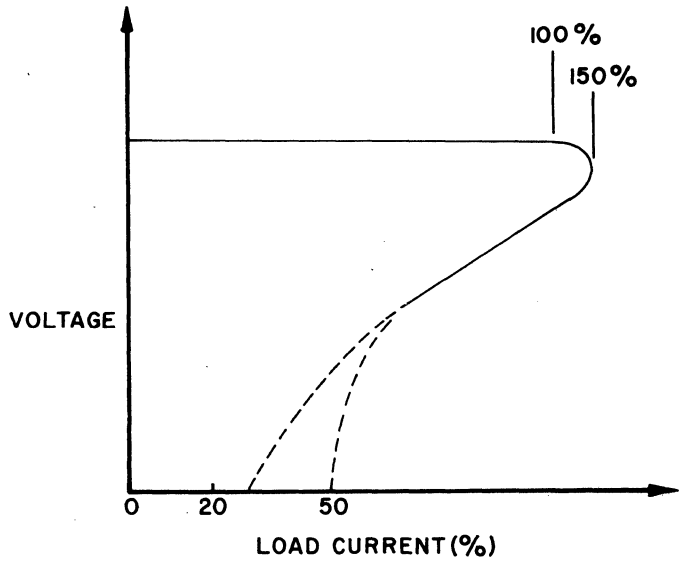

Figure 2-7. Foldback Under Full Load to Short-Circuit Current

CONTROLS AND INDICATORS

A number of key and switch controls are located on the display terminal along with indicator lights. These allow initiation and observation of the display operation.

OPERATOR CONTROLS AND INDICATORS

The display terminal contains controls and indicators on four different panels — the keyboard panel, control panel, front panel, and connector panel. Figure 2-8 shows the front of the display terminal which has three of these panels. The fourth panel, the connector panel, is located on the rear of the display terminal and is shown in figure 2-9. A list of operator controls and indicators is given in table 2-3.

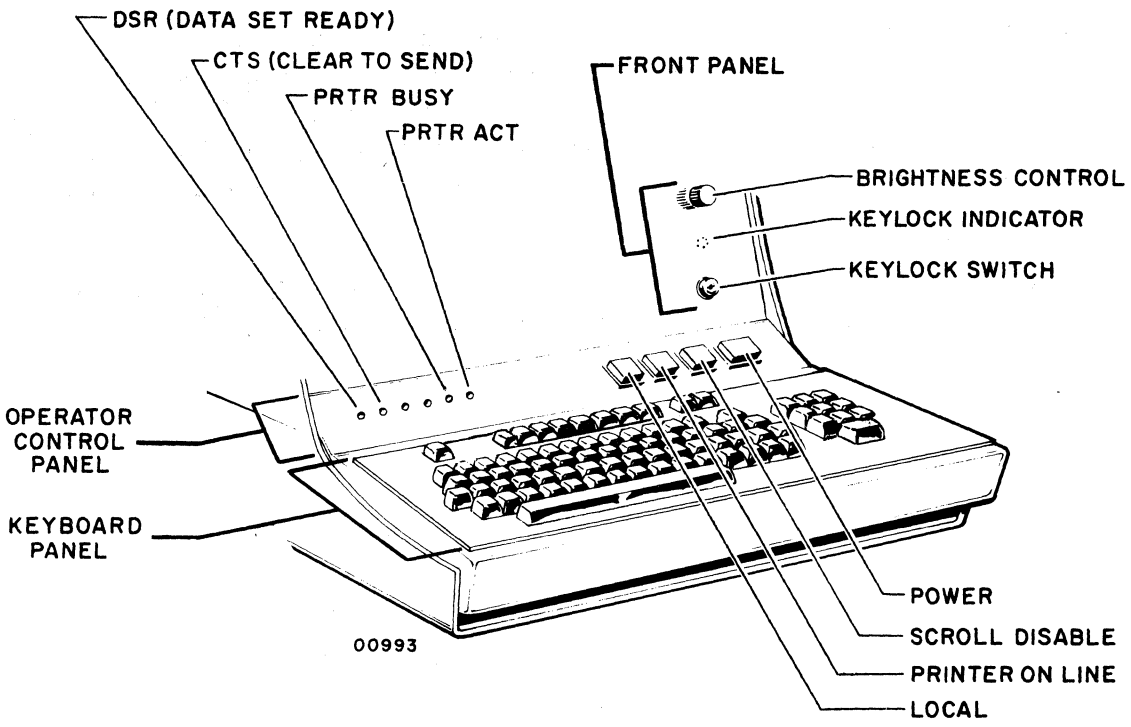

Figure 2-8. Front, Operator Control, and Keyboard Panels

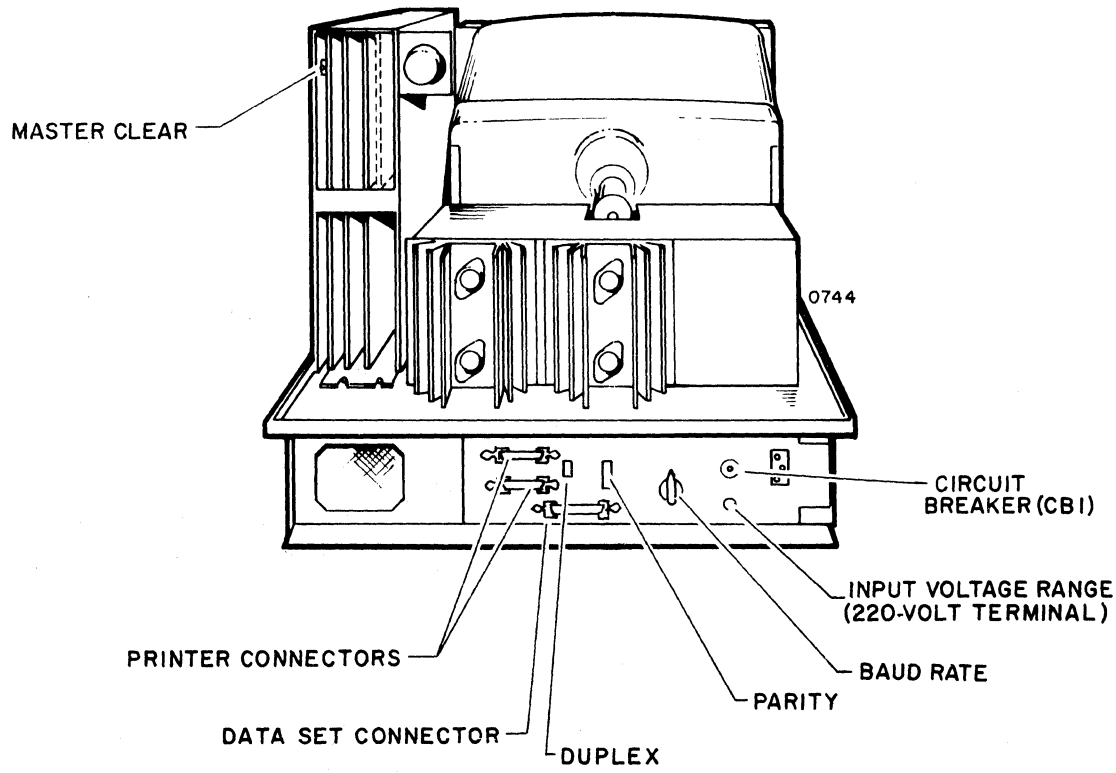

Figure 2-9. Connector Panel (Basic Terminal, 220 Volts)

TABLE 2-3. OPERATOR CONTROLS AND INDICATORS

CONTROL OR INDICATOR	TYPE	LOCATION	FUNCTION
POWER	Pushbutton Switch/Indicator	Operator Control Panel	Applies primary power to terminal when illuminated. Application of primary power sets all logic elements to initial or starting condition.
Brightness Control	Rotary Potentiometer Control	Front Panel	Allows adjustment of character intensity shown on the display. CCW: Reduces intensity CW: Increases intensity
Keylock Switch	Key-Operated Lock-Switch	Front Panel	Allows manual disable of keyboard to prevent keyboard generation of character codes. Terminal transmit function is also disabled; however, character and control data may still be received.
Keylock Indicator	Indicator Light	Front Panel (Above Keylock Switch)	Illuminated when keyboard disabled by Keylock switch.
LOCAL	Pushbutton Switch/Indicator	Operator Control Panel	Disables transmit circuits of terminal when illuminated. Keyboard data then automatically passes to memory for display. Data from communications modem still allowed and takes precedence over keyboard originated data. Local mode is commonly used when testing the terminal.
SCROLL DISABLE	Pushbutton Switch/Indicator	Operator Control Panel	Disables display line scroll operation when indicator is illuminated (see figure, Display Scroll Operation). Display is in page mode when indicator is lit.
DUPLEX FULL/HALF	2-Position Slide Switch	Connector Panel	FULL: All keyboard generated codes routed directly to communications modem. Codes not stored in memory or displayed unless returned from remote equipment. Local mode disables transmit function. HALF: Keyboard generated codes route to the modem and the display memory for display if no information is coming from computer. Local mode disables transmission to the modem but allows display of keyboard entries and received data.
BAUD RATE	4-Position Rotary Switch	Connector Panel	Allows operator to select data transfer/receive rates between terminal and communications line. 75, 110, 150, and 300 bits-per-second available.

TABLE 2-3. OPERATOR CONTROLS AND INDICATORS (CONT)

CONTROL OR INDICATOR	TYPE	LOCATION	FUNCTION
PARITY EVEN/MARK/ODD	3-Position Slide Switch	Connector Panel	EVEN: Data words transmitted with even parity and checked for even parity when received. MARK: (Center position.) Parity disregarded. ODD: Data words transmitted with odd parity and check for odd parity when received.
Bell Tone	Audible Tone	Internal	Sounds bell when cursor enters 73rd character position of any display line to indicate approaching end of line. Sounds if bell code (007_8) generated from keyboard or received from communications line.
DSR (Data Set Ready)	Indicator Light	Operator Control Panel	Illuminated when terminal modem indicates it has power on and is ready to send data to the terminal.
CTS (Clear To Send)	Indicator Light	Operator Control Panel	Illuminated when modem activates clear to send line. Must be on to start transmit.
Keyboard Keys	Magnetic-Reed, Momentary-Contact Switches	Keyboard Panel	Provides data entry for message composition on the display screen. Also provides entry keys for special communication functions. See both Data Entry and Keyboard, for details.
PRINTER ON LINE	Pushbutton Switch/Indicator	Operator Control Panel	For use with hardcopy printer. Illuminated position activates hardcopy printer channel. All displayed characters are printed when printer is connected with terminal. When not on (light out), PRINT key on keyboard must be pressed to obtain desired hard copy of displayed data.
PRTR BUSY (Printer Busy)	Indicator Light	Operator Control Panel	For use with hardcopy printer. When illuminated, indicates printer is busy with this terminal or another one sharing printer (8 terminals may share 1 printer). If PRINT key or PRINTER ON LINE switch is pressed while PRTR BUSY is lit, new print operation will not occur until after PRTR BUSY extinguishes.

TABLE 2-3. OPERATOR CONTROLS AND INDICATORS (CONT)

CONTROL OR INDICATOR	TYPE	LOCATION	FUNCTION
PRTR ACT (Printer Active)	Indicator Light	Operator Control Panel	For use with hardcopy printer. Illuminated only when terminal is transferring data to printer or has exclusive control of printer via the printer on-line mode.
PRINT	Magnetic-Reed, Momentary-Contact Switch	Keyboard Panel	For use with hardcopy printer. With printer off line and not busy (see above), pressing PRINT key sets cursor to start of displayed page and then advances cursor through entire display. During this time, entire displayed page is transferred to printer. This print operation disables any data entry operations from keyboard and disables transmit to modem. Receiving data aborts the print operation.
CB1 (Circuit Breaker)	2-Position Pushbutton Switch	Connector Panel	Pressing this red pushbutton resets the internal circuit breaker if it has opened due to overload.
INPUT VOLTAGE RANGE (208/230 Volts) (Not required on 120-volt terminal)	2-Position Rotary Switch	Connector Panel	NORMAL: For 210- to 256-vac, 50-Hz power source. LOW LINE: For 187- to 230-vac, 50-Hz power source.

MAINTENANCE CONTROLS AND INDICATORS

Controls and indicators which will be helpful during maintenance of the display are listed in table 2-4. Figures 2-8 and 2-9 show their location.

TABLE 2-4. MAINTENANCE CONTROLS AND INDICATORS

CONTROL OR INDICATOR	TYPE	LOCATION	FUNCTION
DSR (Data Set Ready)	Indicator Light	Operator Control Panel	Illuminated when terminal modem indicates it has power on and is ready to send data to the terminal. For maintenance use to check presence of usable carrier signal from the terminal.
CTS (Clear to Send)	Indicator Light	Operator Control Panel	Illuminated when modem activates clear to send line (see Interface Circuits, this section). For maintenance use to check modem conditions for transmitting to modem.
Master Clear	Pushbutton Switch	Interface Card	Pressing this switch clears internal circuits to initial or starting logic condition.

APPLYING POWER TO TERMINAL

To apply power to the terminal, use the following procedure.

1) Press the POWER switch/indicator (it should light).
2) Wait 30 seconds for cursor to appear on the viewing screen.
3) If brightness of viewing screen is too bright/dim adjust Brightness knob as necessary. Terminal should not be operated with excessive display screen brightness or displayed information will be distorted and the life of the CRT display tube may be shortened.
4) With keyboard unlocked, and local mode set, press several alpha-numeric keys to check display.
5) If the cursor does not appear after checking brightness per step 3 above, push the red circuit breaker on the connector panel and reapply power. If the cursor still does not display or if pressed character keys or cursor controls fail to display, see Fault Isolation Procedures, Section 7, this this manual.

DATA ENTRY

Data may be entered into the display terminal memory from the terminal keyboard with half duplex or local operation or from remote or external equipment such as a central processor. Information stored in the terminal memory is displayed on the display screen. When a character or other displayable character code is entered via the keyboard or received from a central processor, its display location will be indicated by the location of the cursor. With a blank screen, the cursor will still be displayed. The keyboard contains control keys for moving the cursor and editing a message, as well as character keys and function control keys.

CURSOR

The cursor is a blinking symbol located beneath the position where the next displayable character will be entered onto the display screen. See figure 2-10. It blinks approximately three times a second. When a character key is pressed, the character shown on the key will be displayed on the display screen above the cursor. Data entry may be either page format or scroll format. In page format (SCROLL DISABLE indicator illuminated) and with the display screen cleared, the cursor is under the first character position in the top line. As each character is entered from the keyboard, the cursor moves one character position to the right.

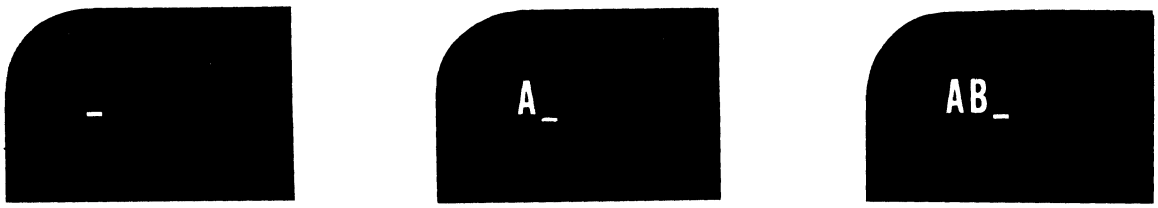

BLANK DISPLAY WITH CURSOR

DISPLAY AFTER PRESSING CHARACTER KEY A

DISPLAY AFTER PRESSING CHARACTER KEYS A AND B

NOTE: THE CURSOR AND DISPLAYED CHARACTERS APPEAR AS WHITE FORMS ON A BLACK BACKGROUND UNLESS CONTAINED IN AN INVERSE VIDEO FIELD (SEE INVERSE VIDEO, THIS SECTION).

Figure 2-10. Cursor Display

When the cursor is advanced from the 72nd character position of a line to the 73rd position, an audible tone will sound indicating the proximity of the end of the line. When the cursor is advanced from the 80th character position at the end of the line, it will automatically move to the first character position of the next line down. This process will continue until the last character position of the last line is reached. When the cursor advances from this position, it will automatically return to the first character position of the top line. If the display terminal is operating in scroll mode when the cursor reaches the end of the last line, any additional input will cause all lines on the display screen to move up one line position, figure 2-11. The top line will move off the top of the screen and the cursor will move to the beginning of the new blank bottom line.

KEYBOARD

The keyboard contains 48 alphanumeric symbol keys, a cluster of 10 numeric keys, 10 message editing keys, and five special function keys. Two character sets are available for display. Table 2-1 shows the characters available with the 96-character set. Pressing any character or function key generates a unique 7-bit ASCII compatible code assigned to the key by hardware. If a second character or function key is pressed while another key is still down, the second key will not interfere with the first key. The second key will produce its code only after the first key is released.

REQUEST FILE RECORDS FOR 0800 THROUGH 1000 FOR ANY A102309, A102343, OR A102440

FILE NAME: GOODROE

RECORD 1 A102309 CODE M,N

RECORD 2 A102343 CODE NONE

RECORD 3 A102440

ALSO LIST ANY OTHER ITEMS PERTAINING TO THIS FILE OR CODE

CLASSIFICATION: NONE

REMARKS: SEND HASLO CODE M,N,T,Y

SCROLL MODE + PRESS

NOTE: THIS CAN BE ANY KEY INPUT WHICH ADVANCES THE CURSOR FROM LAST POSITION IN LAST LINE.

FILE NAME: GOODROE

RECORD 1 A102309 CODE M,N

RECORD 2 A102343 CODE NONE

RECORD 3 A102440

ALSO LIST ANY OTHER ITEMS PERTAINING TO THIS FILE OR CODE

CLASSIFICATION: NONE

REMARKS: SEND HASLO CODE M,N,T,Y

Figure 2-11. Display Scroll Operation (8-Line Basic Display)

Message Editing

The entry of a message for display is accomplished with the character keys and the function control keys. A list of function control keys can be found in table 2-2. These control keys permit entering a message in a format suitable for a particular application.

Cursor Control

Six keys are available for moving the cursor on the display screen without altering the displayed data. The RESET and RETURN keys permit large changes in the cursor position. The four cursor keys (Backspace, Skip, Up Cursor, Line Feed) permit small changes.

RESET Key

In page mode, the RESET key moves the cursor from any position on the screen to the first position of the top line. In scroll mode, the cursor is moved to the first position in the bottom line. Initiation of this function is caused by generated of 031_8 code by the RESET key or CNTRL + Y keys or receipt from a central processor.

RETURN Key

This key moves the cursor from any position in a data line to the first character position of that line. Generation of the 015_8 code by the RETURN key or CNTRL + M keys or receipt from a central processor will initiate this function.

←(Backspace) Key

This key moves the cursor one character position to the left. If the cursor is in the first character position, it will move to the last character position of the line above. If the cursor is in the first character position of the top line, the cursor will move to the last position of the last line. Initiation of this function is caused by generation of 010_8 code by the ← key or CNTRL + H keys or receipt of the code from a central processor.

→(Skip) Key

This key moves the cursor one character position to the right. If the cursor is at the end of a line, it will move the cursor to the start of the next line. If the cursor is at the last character position of the last line and the display is operating in page mode, the cursor will move to the first position of the top line. In scroll mode, the displayed lines will move up one line, the top line moving off the display, and the cursor will move to the first character position of the blank last line. Initiation of this function is caused by generation of 025_8 code by the →key or CNTRL + U keys or receipt of the code from a central processor.

↑ (Cursor Up) Key

This key moves the cursor up one line, maintaining the same relative position in the line. If the cursor is in the top line, it will move to the same relative position in the bottom line. Initiation of this function is caused by generation of 032_8 code by the ↑ key or CNTRL + Z keys or receipt of the code from a central processor.

↓ (Line Feed) Key

This key moves the cursor down one line maintaining the same relative position in the line. If the cursor is in the bottom line and the display is in page mode, the cursor will move to the same relative position in the top line. If the display is in scroll mode and the cursor is in the last line, then all lines will move up one line and the cursor will move to the first character position of the blank last line. This is called a line feed and allows initiation of the scroll action without filling the whole last line with data. Initiation of this function is caused by generation of 012_8 code by the ↓ key or CNTRL + J keys or receipt of the code from a central processor.

Line Clear and Clear

These functions affect the displayed data and are used for modification of previously entered messages. The line clear and clear functions allow portions of, or the total message to be removed.

LINE CLEAR Key

This key causes the removal of all displayed data from the cursor position to the end of the line. The cursor does not move. Initiation of this function is caused by generation of 026_8 code by the CLEAR key, CNTRL + V keys or receipt of the code from a central processor. This function is not available when display is operating in scroll mode.

CLEAR Key

This key causes all displayed data to be removed from the display screen and the cursor to be moved to the first character position of the top line if display is operating in page mode and moved to first position of last line if operating in scroll mode. Initiation of this function is caused by generation of 030_8 code by the CLEAR key or CNTRL + X keys or receipt of the code from a central processor.

DISPLAY OPERATION MODE

The selection of the correct operating mode should be made before placing the display terminal in active operation. Place the terminal in local mode, indicator illuminated, to check out the performance of the various terminal functions. In this mode all data entered at the keyboard will be stored in the display memory and displayed on the screen. No data will be transmitted to the central processor. Messages can still be received. To operate in remote mode, disable the LOCAL switch, indicator extinguished; this will allow transmission of the keyboard entered data to the remote equipment or central processor. Two types of remote operation are available — half duplex and full duplex. With half duplex, the transmitted data is also stored in the display memory and displayed. In full duplex, no keyboard entered data is stored in memory for display. All displayed data is sent to the terminal from remote equipment, such as the central processor.

INVERSE VIDEO

Inverse video allows highlighting portions of a display message, figure 2-12. Characters with the inverse video field are black on a white background. There is no limit to the number of inverse video fields that may be displayed or the size of any one field. The start inverse video field code 016_8 is generated from the keyboard by pressing CNTRL + N keys. The end inverse video field code 017_8 is generated from the keyboard by pressing CNTRL + O character keys. Inverse video may also be received from remote equipment.

Figure 2-12. Inverse Video

OPTIONS

This portion of the manual describes options that may be used with the terminal. If the equipment does not use an option, disregard this portion of this manual.

Option 1 — 16-line x 80-character display format
Option 2 — Hardcopy receive-only printer

16-LINE X 80-CHARACTER DISPLAY FORMAT

The terminal is designed to accept a character-memory expansion of 640 additional characters, thus enabling 16 lines of 80 characters on the video display as compared with the basic version with 8 lines of 80 characters, figure 2-13. This expansion is a plug-in printed circuit memory card (expanded memory kit CC311-A). If this option is used, the two character memory cards, being identical, are fully interchangeable. This expansion is easily added as an on-site change if ordered by a customer after receiving the basic terminal.

STANDARD 8x80 DISPLAY

OPTIONAL 16x80 DISPLAY

Figure 2-13. Display Format Option

HARDCOPY RECEIVE-ONLY PRINTER

An optional hardcopy printer is available for use with up to eight display terminals. The printer allows printing a hard copy of the messages displayed on the display screen. The printer may be used in the on-line or off-line mode. With the on-line mode, displayed characters will be transferred to the printer as they are entered into the display from the keyboard or from the central processor. In the off-line mode, a full message may be composed and corrected before being transferred to the printer. Character codes 040_8 through 176_8, shown in table 2-1, along with the control codes

for backspace (010_8), line feed (012_8), and return (015_8), are used with the printer. Details of the printer channel are described in the paragraphs on Display Terminal Modules in this section.

Printer On-Line Mode

Use of an on-line printer with the terminal will provide an automatic, permanent copy of incoming messages. The operator must observe the following items when placing the terminal on line with an associated printer.

1) Check that PRTR BUSY indicator is extinguished.
2) Press PRINTER ON LINE switch (this switch should illuminate, the PRTR BUSY indicator should come on, and PRTR ACT should illuminate).

When the printer is on line with the terminal, all received or composed displayable characters appearing on the display screen will transmit to the printer for printout. The control functions of backspace, return, and line feed also result in printer operations; however, all other control functions are ignored for printout operation.

Printer Off-Line Mode

Normally the printer should be off line (PRINTER ON LINE indicator extinguished) when the operator is composing messages with the terminal. This allows the operator to make a rough draft of messages and perform any necessary corrections without the printer recording each character as it is entered or changed. When a message is complete and a printed copy is desired, the operator must do the following:

1) Check that PRTR BUSY indicator is extinguished.
2) Press PRINT key (PRTR ACT indicator should illuminate while the displayed message transfers to the printer). During this message transfer, the keyboard is locked out to ensure correct hardcopy of the displayed message; however, an incoming message from external equipment (e.g., central processor) will enter the terminal and abort the print operation.

SECTION 3

INSTALLATION AND CHECKOUT

This section describes crating, uncrating, installation, and checkout procedures for the Conversational Display Terminal and on-site replaceable spare modules. Power requirements and cabling information are also provided.

CRATING

Reusable shipping containers are used by the manufacturing facility for initial shipment. These containers and packing materials should be retained on site in the event it is necessary to return faulty modules to the repair facility. Crating materials and packing procedures are described in separate illustrations covering the terminal and spare modules. Figure 3-1 provides packing information for the terminal. Figures 3-2 through 3-5 provide packing information for the spare modules.

UNCRATING

Refer to figure 3-1 and uncrate the display terminal as follows:

1) Open the shipping container and carefully remove the terminal.
2) Carefully remove all exterior packing material (plastic dust cover, shipping pallet, etc.) ensuring that the viewing screen is not damaged.
3) Place the terminal on a sturdy, level-surfaced desk, counter, or table intended as the work station. Ensure that adequate surface area and rigidity are provided to safely support the unit.
4) Refer to Installation, this section, for removal of interior packing materials.
5) Retain all packing materials and the reusable shipping container for future use.

NOTES

1) REMOVE HOOD AND INSERT A PIECE OF URETHANE FOAM BETWEEN LOGIC MODULE AND CRT.
2) REMOVE CONNECTOR CAP FROM NECK OF CRT AND TAPE TO SIDE OF POWER SUPPLY WITH FILAMENT TAPE.
3) TAPE TOP OF VIEWING SCREEN TO CRT FRAME WITH 2 PIECES OF FILAMENT TAPE AND REPLACE HOOD.
4) MOUNT DISPLAY TERMINAL TO PALLET BASE USING SIX EACH 5/16-18Nc x 1-1/4 MACH. SCREWS, LOCK WASHERS AND FLAT WASHERS.
5) PLACE BOTTOM CUSHION IN CONTAINER WITH BRIDGE OF CUSHION TOWARD REAR OF TERMINAL.
6) PLACE TERMINAL IN CONTAINER WITH TAPED TUBE AND TOP CUSHION.
7) PLACE UNIT IN CONTAINER WITH TAPED TUBE AND TOP CUSHION.
8) CLOSE EXTERIOR CONTAINER AND SEAL WITH 3" REINFORCED WHITE BOX SEALING TAPE.

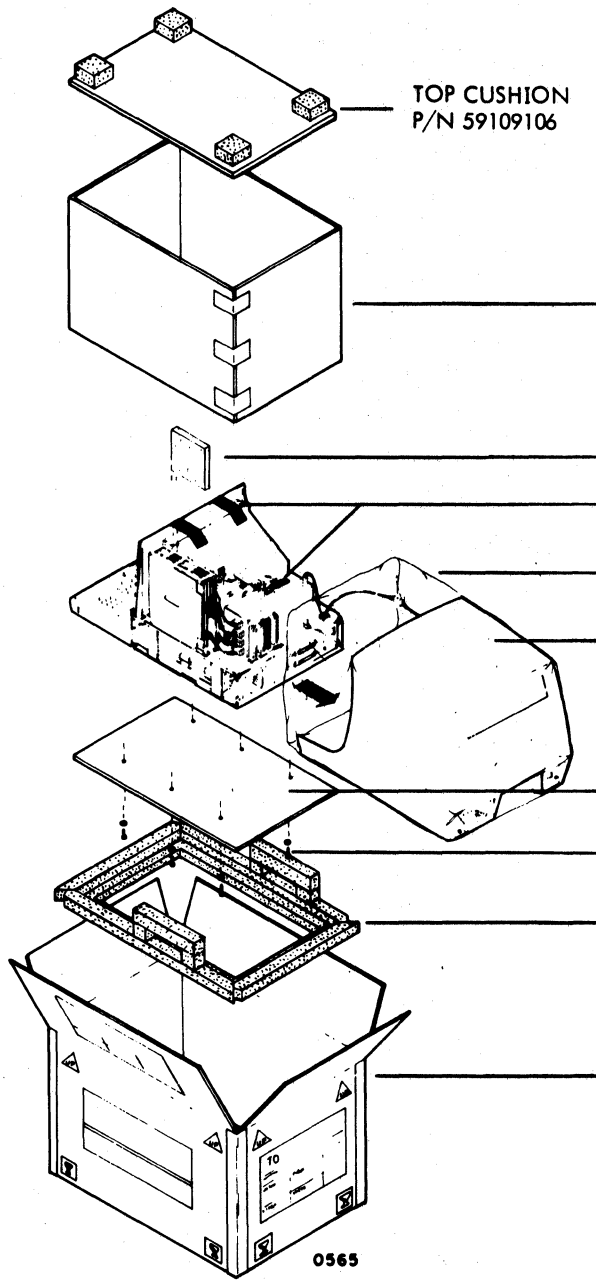

Figure 3-1. Display Terminal Packaging

NOTES

1) PLACE 4 CORNER PADS IN EXTERIOR CONTAINER.
2) PLACE INTERIOR BOX CONTAINING VIDEO DISPLAY MODULE (MANUFACTURER'S PACKAGING IN EXCONTAINER.
3) PLACE 4 CORNER PADS ON TOP OF INTERIOR CONTAINER.
4) INSTALL TOP OF EXTERIOR CONTAINER AND SEAL WITH 3/4" FILAMENT TAPE.

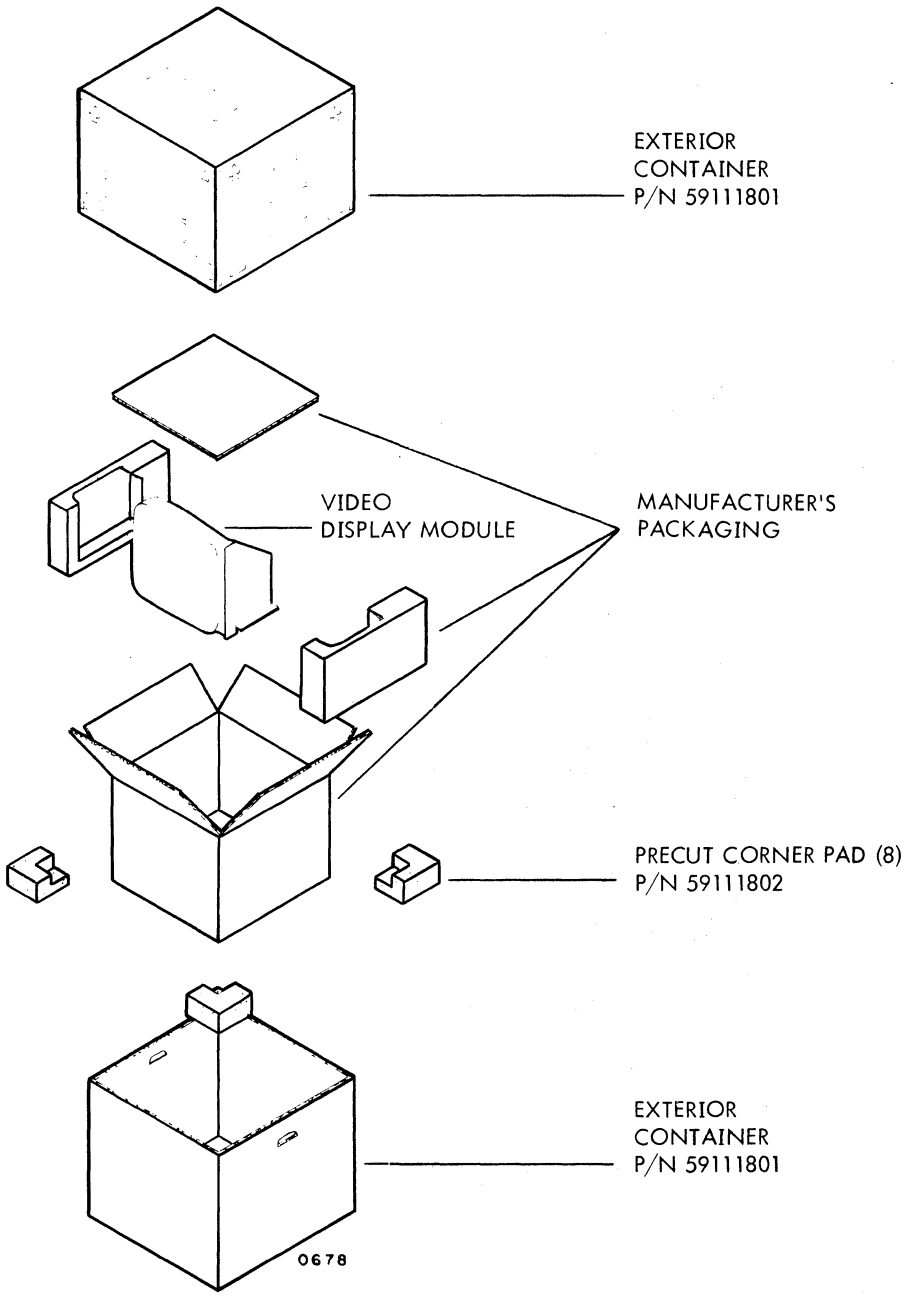

Figure 3-2. Video Display Module Packaging

NOTES

1) PLACE D-120 AIR CAP (FOLD ONCE) IN BOTTOM OF CONTAINER.
2) PLACKAGE PER ILLUSTRATION AND SEAL WITH 3/4" FILAMENT TAPE.

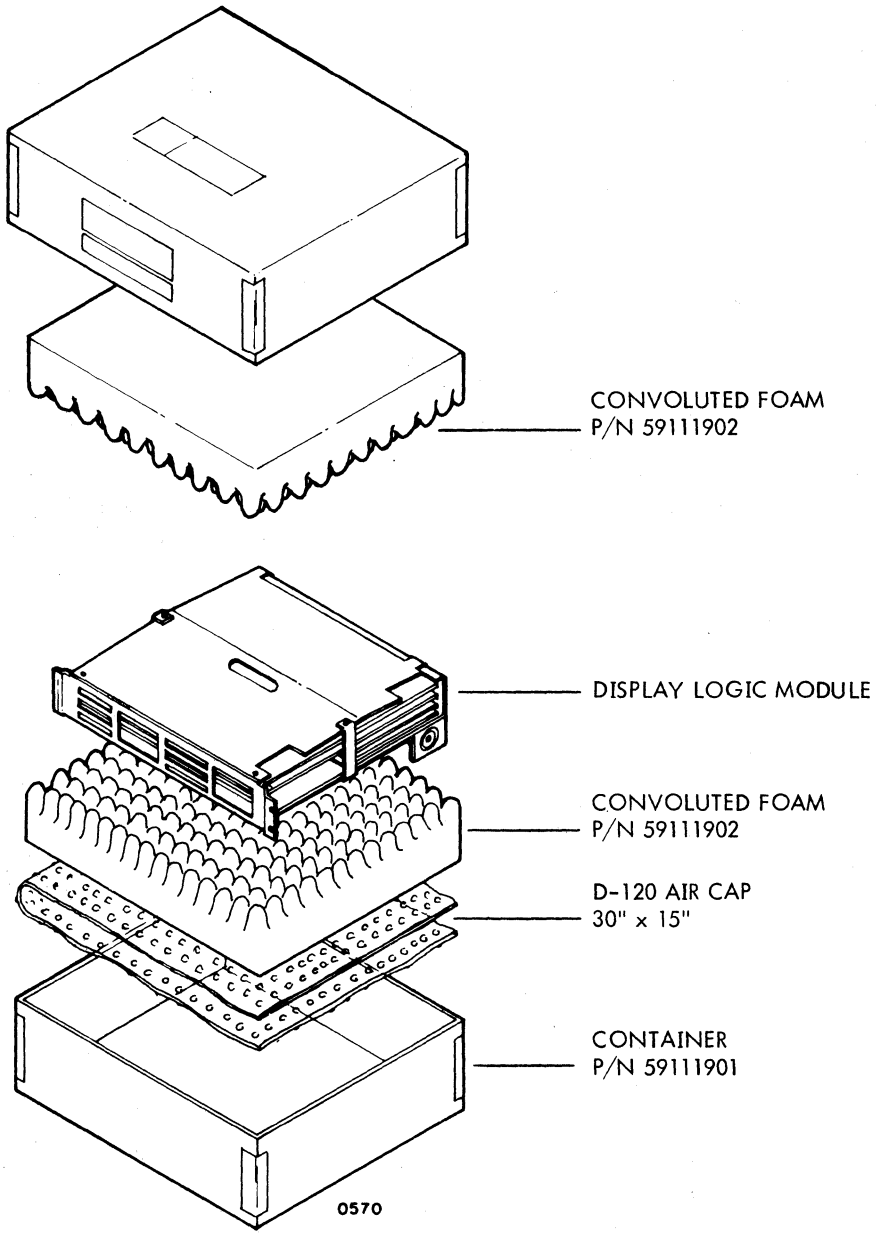

Figure 3-3. Display Logic Module Packaging

NOTES

1) MOUNT POWER SUPPLY ON PALLET USING #10 MACHINE SCREWS, NUTS, AND FLAT WASHERS.
2) ADD PALLET CLIPS TO TABS ON SIDE OF POWER SUPPLY.
3) INSTALL TAPED TUBE AND CLOSE INTERIOR CONTAINER.
4) PLACE FOAM END CAPS ON INTERIOR CONTAINER AND PLACE INTO EXTERIOR CONTAINER.
5) SEAL CONTAINER WITH 3/4" FILAMENT TAPE.

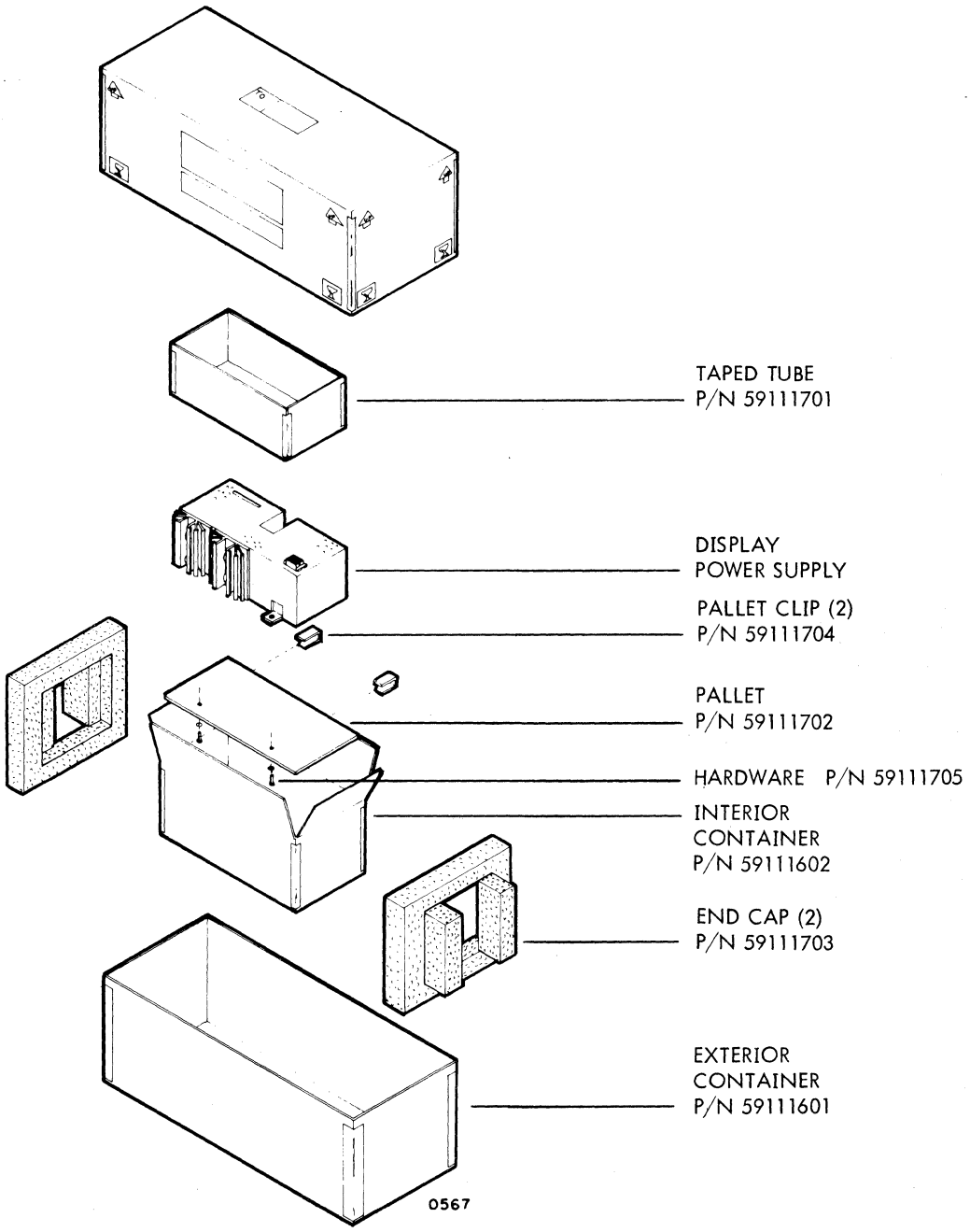

Figure 3-4. Display Power Supply Packaging

NOTES

1) PLACE URETHANE FOAM PADDING ON UNDERSIDE OF PC BOARD, DIRECTLY UNDER THE ROM CHIP.
2) PLACE ALUMINUM FOIL SHEET ON UNDERSIDE OF PC BOARD COVERING THE FOAM PADDING AND ROM CHIP.
3) PLACE KEYBOARD IN POLYETHYLENE BAG P/N 59111503.
4) PLACE CREASED CARDBOARD SHEET P/N 59111502 AROUND KEYBOARD. SECURE WITH FILAMENT TAPE.
5) FOLD 30" AIR CAP WTICE AND PLACE OVER KEYBOARD.
6) WRAP 90" AIR CAP TWICE LENGTH-WISE AROUND KEYBOARD.
7) PLACE WRAPPED KEYBOARD IN CONTAINER AND SEAL WITH 3/4" FILAMENT TAPE.

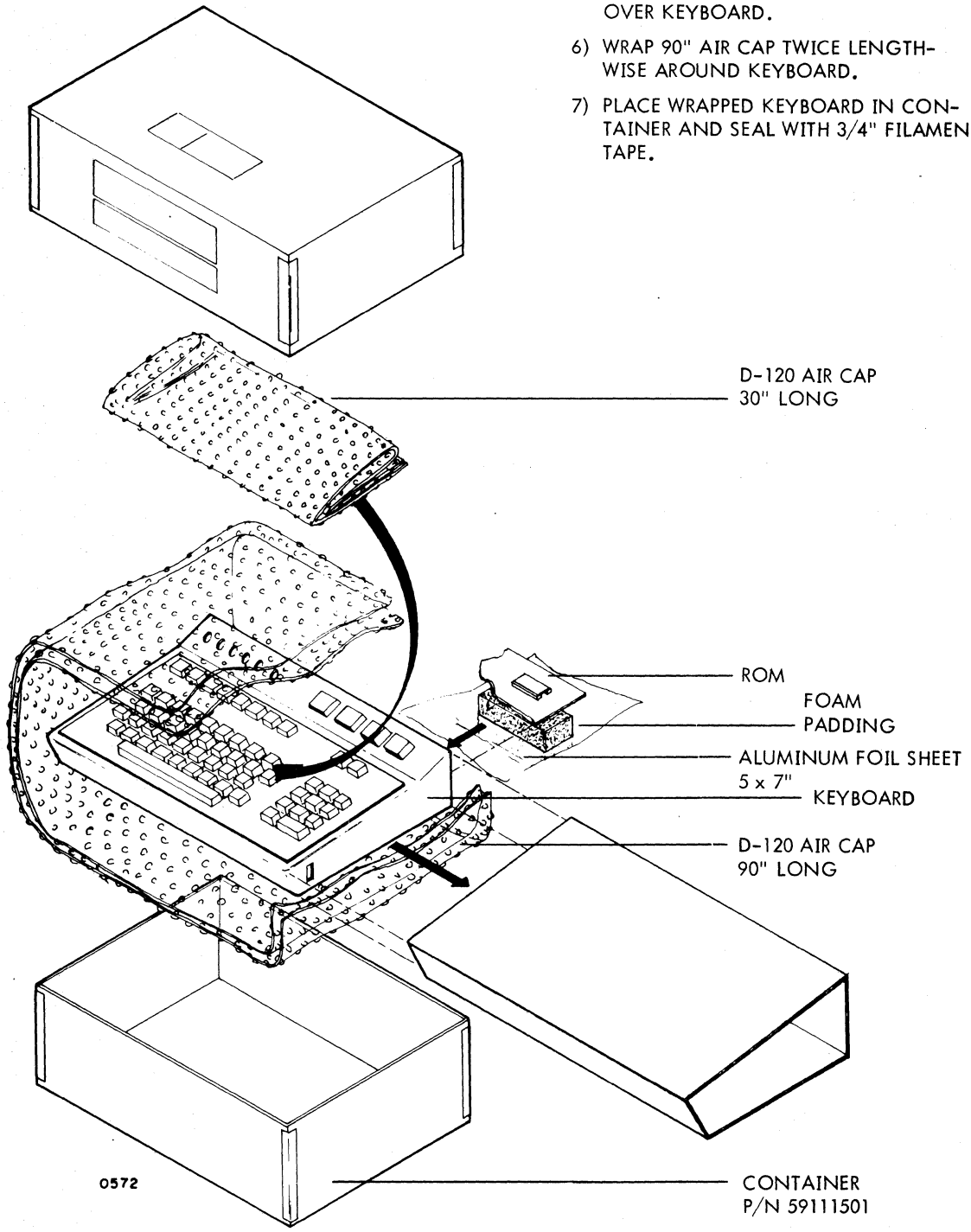

Figure 3-5. Keyboard Packaging

INSTALLATION

The following paragraphs describe the procedures for installing a display terminal. This includes removing packing material, checking cable connections, and operational check-out of the terminal.

CAUTION

Remove ac power cord from ac receptacle before removing hood from terminal. Always replace hood before plugging ac power cord into ac receptacle.

INSTALLATION PROCEDURES

The following procedures should be followed for installing the terminal; reference figure 3-6.

1) Be sure terminal is on a sturdy work area and remove plastic dust cover.

CAUTION

Two men are recommended for lifting the terminal. Avoid stress on terminal hood when lifting or damage may result.

2) Remove the cabinet hood — turn screws (1) until they are free of the terminal framework. Do not remove screws from hood. Grasp both sides of hood (2) and carefully slide it back toward rear of display terminal until hood clears framework.

3) Remove foam block (3).

4) Carefully remove tape (4) from display screen. DO NOT SCRATCH SCREEN.

5) Untape CRT connector (5) and connect to plug on base of CRT. Do not force together; connector will go on plug only one way.

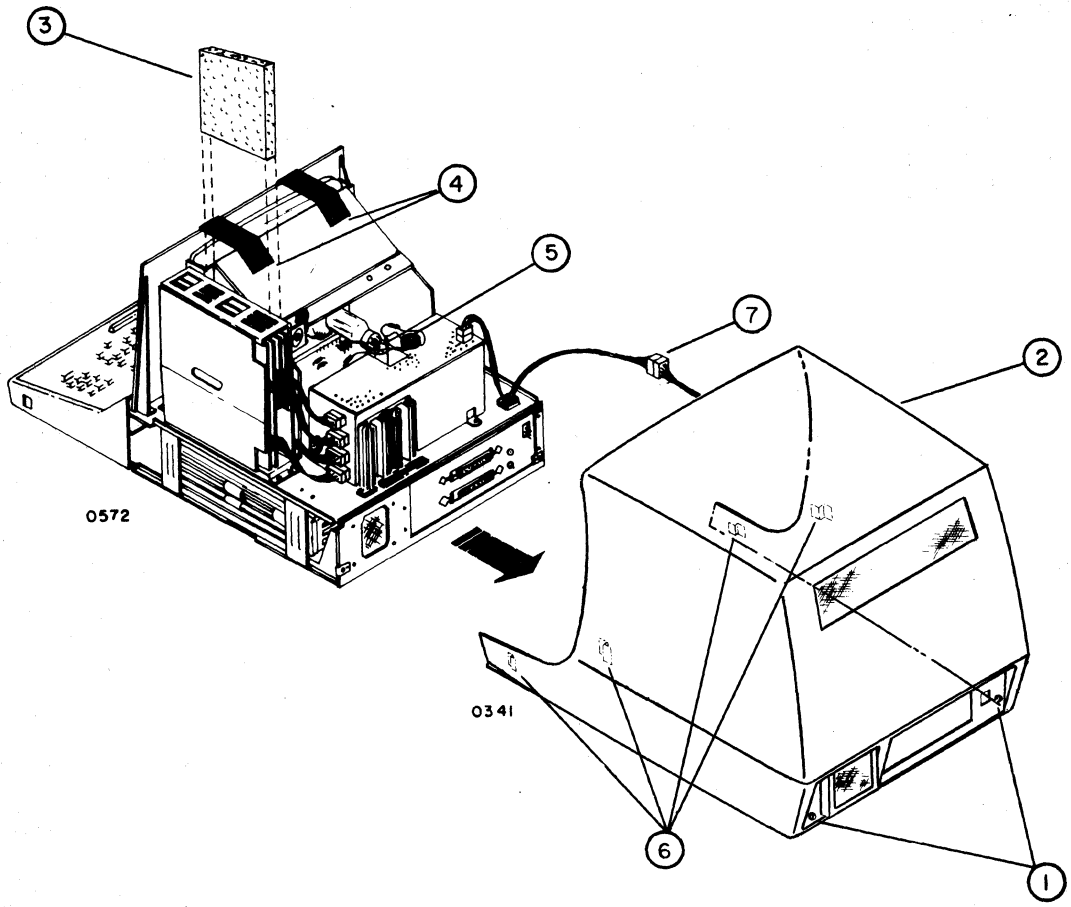

Figure 3-6. Installation Procedures

6) Visually inspect all connectors to ensure they are properly seated.

7) Locate the fan and fan cable connector (7), under the top of the hood. Partially replace the hood and connect the plug and socket in the fan cable.

8) Make sure the ac cable is disconnected from the wall receptacle before replacing the hood.

9) Replace hood (2) carefully by sliding hood over chassis until front engagement tabs (6) are firmly sealed. Align ac socket in hood with plug in chassis before tightening screws (1) at rear of terminal.

CABLE CONNECTIONS

Before proceeding further with the installation steps, the terminal should be placed at its operating station location. This location should be a sturdy, level-surfaced desk, counter, or table which will safely support the terminal. Adequate area should be provided to allow a minimum of 6 inches behind the terminal for ventilation and cable connection.

Data Set Cable

Connect site data set (modem) cable to connector labeled DATA SET on connector panel (maximum modem-to-terminal cable length is 50 feet). Reference figure 3-7.

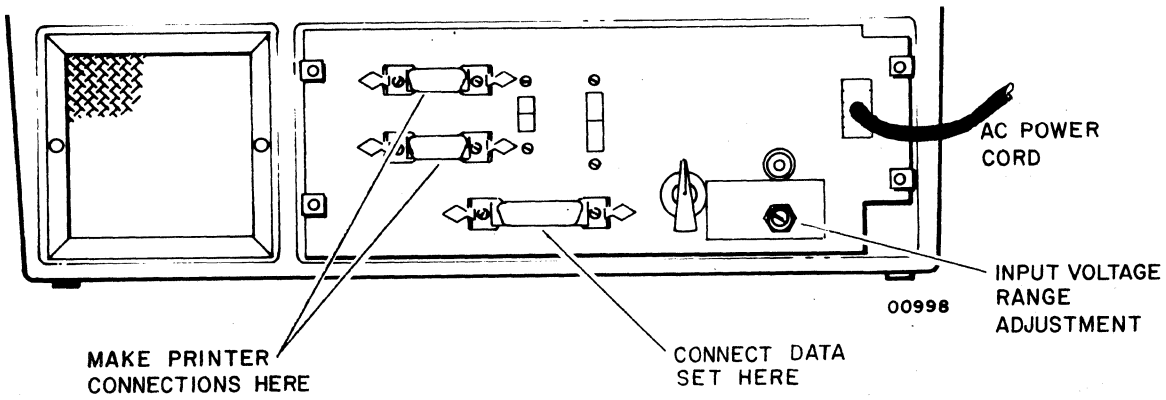

Figure 3-7. Connector Panel

Printer Cable

If a hardcopy printer is associated with the terminal, connect site printer cables to connectors labeled PRINTER on connector panel (see figure 3-8). Figure 3-8 shows the required cable routing for terminals using a printer (maximum printer interface cable length, including any other terminals sharing the printer in daisy-chain fashion, is 1500 feet).

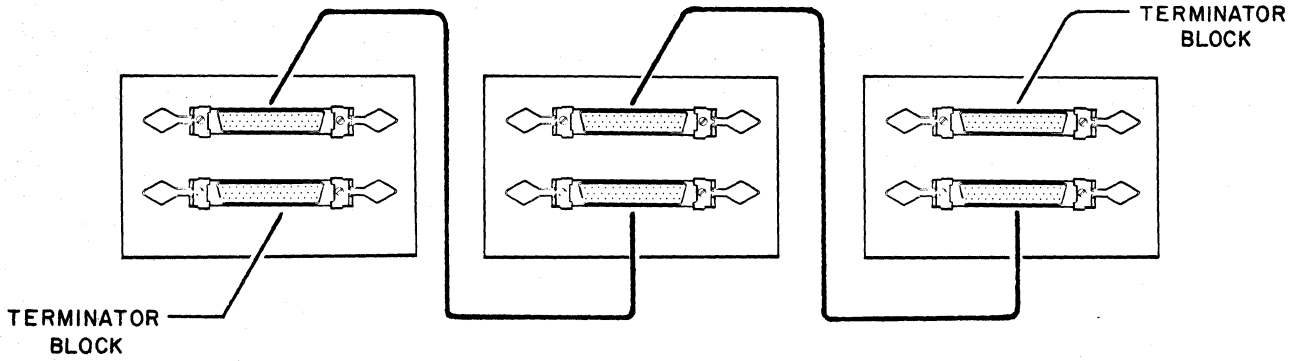

Figure 3-8. Printer Cable Interconnect

From one to eight terminals may share one printer. Printer may be located between terminals on the interface line or on either end. Terminator blocks must be installed on the spare connector of the device (terminal or printer) located on each end of the interface.

Power Cable

Model CC5A2-A uses a 120-vac power source and no adjustment of power input is required. On model CC5A2-B adjustment is required. If the ac power source is 210 to 256 volts, set the INPUT VOLTAGE RANGE selector screw on NORMAL. If the ac power source is between 187 and 230 volts, then set the INPUT VOLTAGE RANGE selector screw on LOW LINE.

NORMAL: Position for 210- to 256-vac power source

LOW LINE: Position for 187- to 230-vac power source

Connect ac power cable to external power source. Press POWER switch/indicator located on the operator control panel to apply power to the terminal. Power is on when indicator is lit.

CHECKOUT

Checkout is an operational performance check and does not require any test equipment. The following operational performance check may be done to check the terminal operation.

1) With power on (POWER indicator lit) rotate Brightness control knob (on front panel) clockwise until the cursor (blinking underline) is visible in the display area. Brightness should not be set higher than necessary as this may reduce the life of the display tube.

2) Unlock keyboard (Keylock indicator extinguished — turn Keylock keyswitch if necessary).

3) Ensure that the terminal is in (local test) operating mode by observing LOCAL switch/indicator on the operator control panel. If lit, the unit is in local mode; if not lit, press LOCAL switch to light indicator.

4) Disable the scroll format mode (SCROLL DISABLE switch/indicator lit — press switch if necessary).

5) Check the display operation for all displayable symbols by pressing each alphanumeric key on the keyboard and observing results on the display screen (see Section 2, Operation, for displayable symbol keys if necessary).

6) Check keyboard and display operation for all edit control function keys while observing results with displayed data on the display screen (see Section 2, Operation, for control function keys if necessary).

7) Check operation of keyboard control keys SHIFT LOCK, SHIFT, and REPEAT (see Section 2, Operation, for these keys if necessary).

8) Fill entire display area with symbols "a" on top line, "b" on second line, "c" on third line, etc. (8 lines of 80 symbols with basic unit and 16 lines of 80 symbols with expanded memory kit CC311-A).

9) Ensure that the cursor is in the last character position of the bottom display line.

10) Press SCROLL DISABLE switch/indicator, extinguishing light, to place terminal in scroll format mode.

11) Press → (Skip) cursor control key or space bar and observe the scroll operation which should occur (see Section 2, Operation).

12) Fill new last line with any keyboard symbol(s) and observe display for scroll operation again as last symbol position in the bottom line is filled.

13) Perform simulated operational test:

a) Turn off terminal power.

b) Using three short lengths of paper clips, carefully connect together the following pin contacts in the data set connector, figure 3-9:

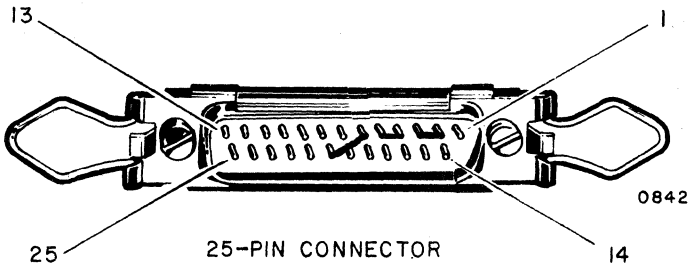

Figure 3-9. Data Set Connector

- Pin 2 (transmitted data) to pin 3 (received data).
- Pin 4 (request to send) to pin 5 (clear to send).
- Pin 6 (data set ready) to pin 20 (data terminal ready).

c) Turn terminal power on. The cursor should appear. Disable local mode (indicator out). The data terminal ready signal (pin 20) should be present and cause the DSR (Data Set Ready) indicator to light.

d) Place terminal in half duplex mode.

e) Press character key "H" several times. Watch CTS indicator (Clear to Send). For each character entry the terminal should generate a request to send signal (pin 4) which is connected to pin 5 (clear to send).

f) Place terminal in full duplex mode and repeat step e).

g) Place printer on line (indicator lit). PRTR BUSY and PRTR ACT indicators should light.

h) Place printer off line. Press PRINT key. Cursor should step through displayed data simulating data transfer. Cursor movement will be much faster than with a printer attached (about 2 seconds for total step-through time).

14) Refer to the site system operating instructions, or have site personnel assist, and perform all required functions for the terminal, utilizing the CNTRL key and all special function keys (refer to the Operators Guide for the terminal if necessary).

The foregoing checkout procedure may be modified for a particular site. If the terminal should fail to operate correctly, first check all cable connections WITH POWER CABLE REMOVED; replace power cable and check terminal operation again. If the terminal still operates incorrectly, refer to Section 7, Troubleshooting, for field corrective action.

USER INSTRUCTIONS

After the terminal has been installed and made operational, discuss the terminal operations with the user. Of particular importance are the four items listed below.

1) Be sure those operating the terminal read the Operators Guide.
2) Review the meaning of the switches on the connector panel. Notes on their setting should be made in the Operators Guide.
3) Review the instructions on Equipment Care and Operator Troubleshooting found in the Operators Guide. An understanding of these instructions will reduce the number of service calls required.
4) Review the keyboard operation: alphanumeric keys, editing keys, and control function keys.

WARNING

Dangerous high voltage exists within the circuits of the unit when power is applied. Exercise utmost caution when checking connections even with power turned off and/or power cable removed. See Safety Procedures and Precautions in Section 6, Maintenance.

SECTION 4

THEORY OF OPERATION

It is the purpose of this section to provide a description of the functional operation of a Conversational Display Terminal. The modules described are the logic module, TV module, and the keyboard module. The power supply module is omitted since its function is constant regardless of the terminal operation being performed. Following the module descriptions are descriptions of the terminal logic functions, control functions under operator control, and the data routing within the terminal.

MODULE FUNCTIONS

Three modules are involved with data routing in the display terminal. The logic module circuits provide the routing and controlling of the data. The TV module provides the display of the data and the keyboard provides the means of operator input.

LOGIC MODULE

The control logic provides timing, sequence, and character generation circuits necessary for the internal functions of a terminal. A 20-MHz oscillator supplies the master timing for the control logic. The character generation circuit uses a large scale integrated (LSI) read-only memory (ROM) which supplies 96 standard ASCII character codes plus three special character codes. The ROM is a metal oxide semiconductor (MOS) type with 256 words, 10-bits each. The ROM is programmed with the necessary beam blank/unblank dot patterns for video formation of all displayable characters.

The logic module generates the composite video for display of the data entry cursor. The cursor underlines the character position on the screen where the next input or output action will occur. The cursor is a horizontal row of five closely spaced dots. The cursor displays in the next to the bottom scan line in a display line (see figure 4-1).

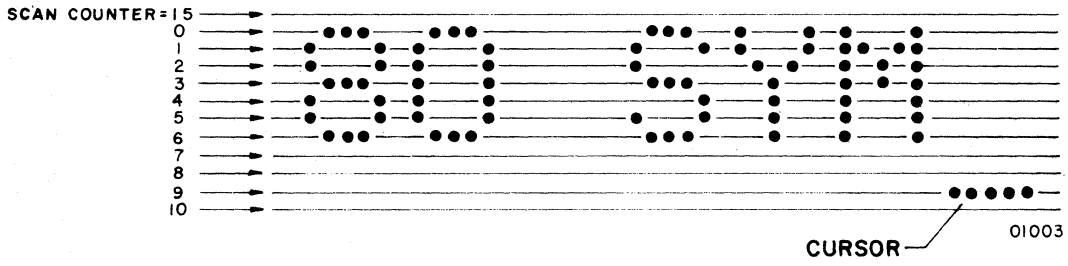

Figure 4-1. Character Dot Formations on Scan Lines

The cursor position also relates to the address in memory where the next entry or retrieval of a character code will take place. A write or read operation makes the display line containing the cursor available at all times. The cursor Y counter determines which of the read/write memory lines is selected. Then, the logic waits for an X compare before entering or retrieving a character code in the read/write memory.

The display uses a series of closely spaced dots to portray a character. The logic module supplies composite video signals so that the electron beam of the display CRT unblanks (turns on sufficient to illuminate the phosphor coating on the face of the CRT) within a 5-dot by 9-dot matrix, as required to produce the dots needed to form each character. All characters will be no more than 5 dots wide by 9 dots high. Figure 4-1 shows the dot patterns of several characters.

Interface circuits provide for communications with a modem. This interface is asynchronous and is designed to operate with data bit serial signals compatible to EIA Standard RS-232-C such as with AT&T 103 Series modems (or equivalent). The modem interface circuits are located on two printed circuit cards in the logic module. The interface communicates at switch selectable rates of 75, 110, 150, and 300 serial bits of data per second.

The interface circuits perform two functions: 1) receive data and 2) send data. The data set ready signal must be active before the module will receive data. The clear to send signal must be active before the module will send data. In addition, the display station must not be busy receiving data or transferring data to the printer channel when a send data function is to be performed. If it is, the display does not perform the function.

A receive data function commands the logic circuits to transfer any code on the receive data line into the read/write memory at the present cursor position, or to perform an internal control function such as clear, reset, or advance cursor.

A send data sequence occurs when a keyboard strobe is received by the logic module, and the module is not in a receive data sequence, the clear to send signal is active, and the disassembly register is not active. The data is sequenced on the send data line in a bit serial mode. The code goes out to the remote equipment when the terminal is operating in either full or half duplex mode and not in local mode. The codes do not enter the display memory in full duplex mode. In local mode the codes are routed to the read/write memory and no codes are sent to the transmit interface. In half duplex mode the codes are sent to both the read/write memory and the remote interface.

To send data, the logic module generates the request to send control signal to initiate a transmit operation. In response to the request to send signal, the modem associated with the display terminal makes the clear to send signal signify that external communication connections are established. The terminal now may send serial data bits to the modem via the send data signal line.

When an associated modem has data for the terminal to receive, it sends it serially to the receive interface via the receive data signal line. Receive data takes precedence over other display terminal operations. The interface circuits recognize the presence of receive data when a start bit appears on the line.

TV MODULE

The TV module provides the visual display of the characters stored in the read/write memory. These characters come from the read/write memory. Control for the CRT to display 8 lines (16 optional with expanded memory) of characters is supplied from the logic module. Each line has 80 character positions. All lines and all character positions may be used in a message to make a "page" with a maximum of 640 characters (or 1280 characters with optional memory).

Each display line of characters contains 12 horizontal scan lines. Figure 4-1 shows the relationship between characters and the scan lines which produce them. As the electron beam of the CRT makes one scan of the display screen, the logic module composite video output unblanks the beam, as necessary, to illuminate dots in only one row of each character matrix in each of the 80 character positions. As seen in figure 4-1, it requires seven scans to produce the dot patterns for the characters shown. The two scan lines immediately below the characters shown are used, as required, to produce dot patterns for other characters (e.g., lowercase "g", "p"). The top and bottom scan lines provide a frame or character separation between characters in adjacent lines. Such line separation ensures visual clarity when characters display as black characters on a white background (inverse video — beam unblanks except on character dot patterns).

A synchronization (sync) circuit uses the information from the X counter, Y counter, and scan counter to position the electron beam of the CRT relative to the logic circuit timing. The X counter advances one count for each character position along a given display line. The Y counter advances one count for each display line. The scan counter keeps count of the scan line, figure 4-1, in which the electron beam is positioned by the Y counter.

The refresh sequence prevents the decay of the displayed data. Also, it continually updates the display with the latest information present in the read/write memory. The refresh rate is sixty times per second for the 120-volt model and fifty times per second for the 220-volt model.

A blinking underline of a character position represents the cursor on the screen of the CRT. The cursor position indicator consists of the cursor X counter and the cursor Y counter. They remember the horizontal and the vertical axis coordinates, respectively, for the location of the cursor within the display. A compare (counts are equal) must exist between the X counter and the cursor X counter as well as between the Y counter and the cursor Y counter before the display terminal can display the cursor. This compare tells the terminal that the electron beam is at the cursor symbol position. Then, if the scan counter = 9, the beam unblanks to display the cursor.

KEYBOARD

The keyboard provides the means for the operator to enter characters into the display terminal. A figure in Section 2, Operation, shows a view of the keyboard panel and the other two panels available to the operator. There is a 96-character set available for keyboard entry. Details of the keyboard are given in Section 2, Operation.

LOGIC FUNCTIONS

The logic functions described here are the functions selected for describing the data routing in the display terminal.

READ/WRITE MEMORY

The read/write memory furnishes the storage for the character codes which the logic module uses when refreshing the CRT display or when transmitting data to external equipment. An 80-bit shift register stores one bit of each character's 7-bit code in an 80-character display line. Therefore, seven 80-bit shift registers store all the bits for one display line. The basic display contains eight display lines. This requires 56 shift registers (seven per line) to provide the necessary room for code storage. The basic building block in memory is a logic unit which contains four 80-bit

shift registers. Because of this arrangement, the memory is referred to as a "quad-80 memory." Each shift register has its own internal recirculation circuitry. Recirculation (shifting) continues for as long as the shift register receives both a recirculation enable and a clock pulse from an external source.

When the signal read memory is active, the display terminal transmits data to an external equipment beginning at the present cursor position. This places the 7-bit character code on the memory output lines.

READ-ONLY MEMORY

A preprogrammed read-only memory, ROM, contains a character matrix which supplies the bits to build the video pulse train which unblanks the CRT electron beam to form a horizontal 5-dot row within the character matrix in the display line. The electron beam displays only one 5-dot row of each character in a display line for each horizontal scan line. The ROM has a separate matrix for each character in the repertoire of the display terminal. A code from the read/write memory determines the selection of the preprogrammed character matrix. When the synchronous timing signal arrives, the ROM logic samples the read/write memory code on the character matrix address lines to select the related character dot matrix in the ROM. Then the ROM makes a 10-bit word available on its output lines. Because the electron beam displays only 5 dot positions of a character for each scan line, the 10-bit word furnishes the dot blank/unblank information for two adjacent scan lines of one character. The scan counter output selects one-half of the 10-bit word when the counter has an even count. The following odd count in the scan counter switches the selection to the other half of the 10-bit word. The third advance of the scan counter enables the selection of a new row in the character matrix to form a new 10-bit word.

DATA CONTROL GATES

The data control gates have two data inputs — keyboard and read/write memory. The gates select the data input which will be transferred to the disassembly register.

DISASSEMBLY REGISTER

The disassembly register converts parallel memory or keyboard data to serial data words suitable for transmission to a modem and/or to the printer channel, and the assembly register.

ASSEMBLY REGISTER

During a receive data function or send data function, when in local or half duplex mode, the assembly register converts the serial data word to parallel data.

DUPLEX CONTROL

The duplex control circuit determines whether data intended for transmission (send data) transmits only to the communications modem or if it transmits to the modem and also is routed to the assembly register for transfer to the read/write memory for display. Full duplex selection allows transmission to the modem only. Half duplex selection permits transmission and routing to the read/write memory. However, if the local circuit is enabled, all send data operations are disabled, and all data entries initiated from the keyboard are sent to the read/write memory and displayed.

VIDEO SERIALIZER

The 5-bit half of the 10-bit word output of the ROM parallel loads into a 5-stage video serializer shift register. The shift register receives six clock pulses to shift out the five bits in serial order to form the video pulse train. The pulse train which results produces one horizontal, 5-dot row of a display line character matrix and a space between adjacent character matrixes.

INVERSE VIDEO CONTROL CIRCUIT

The complementary outputs of the last stage of the video serializer drive separate gates. Only one of these gates may pass the video pulse train at any one time. The gate which will pass the video pulse train depends on whether or not the data is within an inverted field (black on white). If the data is not within an inverted field, the set-side output of the last state of the output shift register gates to give a display of white data on a black background. This is a "normal" display.

If the data is within an inverted field, the clear-side output gates to give a display of black data on a white background. This is an "inverted" display.

COMPOSITE VIDEO DRIVER CIRCUIT

The composite video driver circuit combines the horizontal and vertical sync pulse output of the sync circuit with the video pulse train from the video serializer shift register. The output of this circuit drives the video amplifiers and deflection circuits of the CRT.

PARITY CHECK CIRCUIT

Odd, even, or mark parity check selections are provided for receive data by the parity check circuit.

PRINTER CONTROL

Printer control circuits enable the display terminal to transmit data to an associated printer via the printer interface circuits. Block printout of entire display memory content is available via a PRINT key circuit. Continuous character-by-character printout of data from a communications modem or a keyboard is available with the printer on line.

PRINTER INTERFACE

Dual differential line receivers and dual differential line drivers comprise the printer interface. These circuits allow serial transfer of data to a printer. When the printer active signal is not active, the display terminal is able to acquire the printer channel for its own use. This allows up to eight display terminals to share a common printer. After the display terminal has exclusive printer use, and if the printer is not sending a busy signal, output to the printer is allowed.

INTERFACE CIRCUITS

The display terminal will receive or transmit data via the interface circuits.

Receive Interface

The display terminal accepts data any time it arrives via the communications modem. If an optional printer is connected to the terminal printer interface channel and the printer on line circuits are active, a hard copy of the received data will be obtained.

Transmit Interface

The display terminal may transmit data, ASCII character by character, as it is entered at the keyboard. However, transmission and display of keyboard initiated data depends on which operating mode the interface circuits are set for. The circuits may operate in either remote or local mode depending on the position of the LOCAL switch.

Remote Operating Mode

Remote operating mode is used to transmit data between a terminal and remote equipment. The terminal is designed to transmit data in either of two different duplex modes depending on the condition of the DUPLEX switch.

Full Duplex Operation: With FULL DUPLEX setting, the display interface circuits route all keyboard generated codes through the modem to a central processor, and under central processor program control they must be returned to the logic module interface through the modem before any display occurs.

Half Duplex Operation: With HALF DUPLEX setting, the logic circuits route all displayable keyboard generated codes to the display screen in direct response to keyboard entry and, in addition, the codes are sent through the transmit interface to the modem and to remote telecommunications equipment.

Local Operating Mode

The display terminal will not transmit keyboard data entries when operating in the local mode. This mode is primarily a text mode allowing an operator to check operation of the terminal and optional associated hardcopy printer without placing data transmissions on the telecommunications lines to remote communications equipment.

CONTROL AND INDICATOR FUNCTIONS

The control and indicator functions listed below are those located on the front of the terminal or the connector panel at the rear of the terminal. They are described here to provide an explanation of the controls and indicators as related to the operation of the terminal. Reference Section 2, Operation, for location of these switch/indicators.

PRINTER ON LINE SWITCH/INDICATOR

This switch/indicator is located on the operator control panel. The indicator is illuminated when PRINTER ON LINE is activated. In this position, all keyboard entered characters or received characters are printed when a hardcopy printer is connected to the terminal. When PRINTER ON LINE is activated, the indicators PRTR BUSY and PRTR ACT are illuminated.

PRINT KEY

The PRINT key is used to obtain a hard copy when the terminal is operating off line with the printer.

PRTR BUSY (PRINTER BUSY)

This indicator indicates that the printer is in use by this terminal or another terminal sharing the same printer.

PRTR ACT (PRINTER ACTIVE)

This indicator is illuminated only when this terminal is actively transferring data to the printer or is in the PRINTER ON LINE mode and has exclusive control of the printer.

DSR (DATA SET READY)

This indicator is illuminated when the associated modem activates the data set ready line.

CTS (CLEAR TO SEND)

This indicator illuminates when the associated modem activates the clear to send line.

KEYLOCK SWITCH

This switch enables the operator to manually disable the keyboard. Any messages received from the processor are displayed.

KEYLOCK INDICATOR

This indicator is illuminated when the keyboard is disabled.

BAUD RATE SWITCH

This switch is located on the connector panel at the rear of the display terminal. It provides for the selection of four transmission rates: 75, 110, 150, and 300 baud. Baud rate selection is dependent on the system in which the terminal is operating.

DATA ROUTING

Definitions for the logic blocks in figure 4-2 have been given in prior paragraphs in this section. Bringing these logic blocks together as an integrated system will provide an understanding of the routing of the data within the terminal. Data may be entered into the terminal via the keyboard or the interface circuits from the modem. Data may be transmitted from the terminal to either a printer via the printer interface or the transmit interface circuits to the modem. The direction of data routing between any two logic blocks within the terminal follows the interconnecting lines shown in figure 4-2.

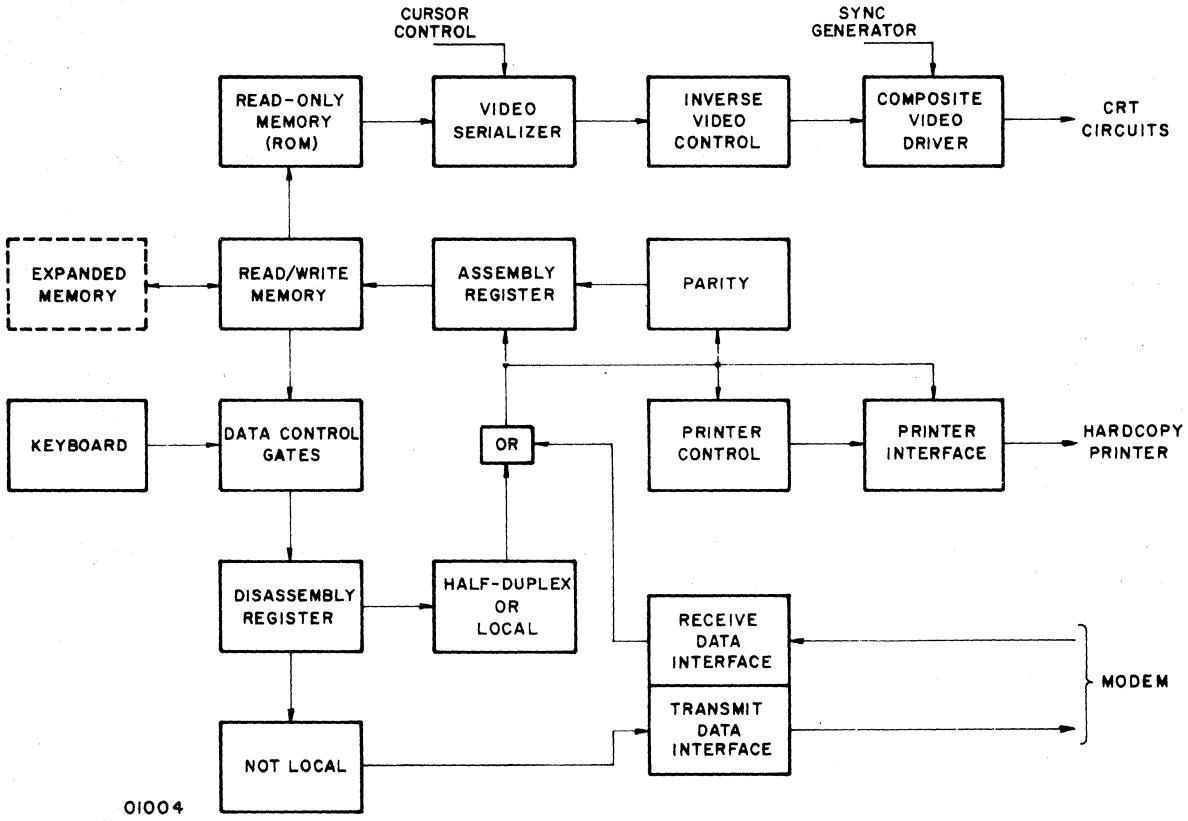

Figure 4-2. Data Routing Block Diagram

KEYBOARD DATA ENTRY

With the keyboard unlocked and no data being received by the terminal, data may be entered by the operator. This data will go to the data control gates. The data control gates route the keyboard entered data to the disassembly register which converts the parallel keyboard data to serial data.

If the terminal is operating in full or half duplex mode, not in local mode, the serial data will be routed to the transmit interface circuits and on to the modem. If the terminal is operating in half duplex mode, the data will also be routed to the assembly register. In local mode the data is routed only to the assembly register and not to the transmit interface. From the assembly register the data goes to the read/write memory.

Data stored in the read/write memory is continually referenced for refresh of the display screen. Data read from the read/write memory is referenced by the read-only memory (ROM) to determine the character to be displayed. Character display data is routed to the video serializer, inverse video control, and composite video circuit and then to the TV circuits for display on the TV screen.

REMOTE DATA ENTRY

Data originating from a remote equipment such as a processor is received by the terminal from the modem and routed through the receive interface circuits. Data is then sent to the assembly register and the parity checking circuits. The assembly register converts the serial data to parallel data and stores the information in the read/write memory. Reception of data prevents the entry of keyboard data. As this information is received and stored in the read/write memory it is also displayed as part of the refresh cycle.

DATA TRANSMISSION

In full or half duplex mode, data entered at the keyboard is routed through the data control gates and the disassembly register to the transmit interface circuits. Data may also be transmitted to the optional printer. With the printer operating on line, data will be routed to the printer interface circuits as it is entered at the keyboard or as it is received at the receive interface. With the printer off line, the data will be block transferred from the read/write memory. The PRINT key will cause a transfer starting at the cursor position. This data will route through the data control gates and disassembly register to the printer interface.

SECTION 5

DIAGRAMS

The diagrams contained in this section provide information on signal interconnection, display terminal configuration, and power distribution. Figure 5-1, Signal Interconnection Diagram, shows the signal cabling between the cards of the logic module and between the logic module and the TV monitor, keyboard, and the connector panel. Figure 5-2 is a block diagram providing an overview of the functional operation of the display terminal. All signals are routed through the control logic section in the logic module. Details of this operation are given in the Theory of Operation section. Figure 5-3 and 5-4 show the power distribution on the display terminal. From these diagrams can be determined the connector numbers and pin numbers of all power cabling. Each terminal module is shown as a dotted line. Figure 5-3 shows the cabling for 120-volt model; figure 5-4 is for 240-volt model.

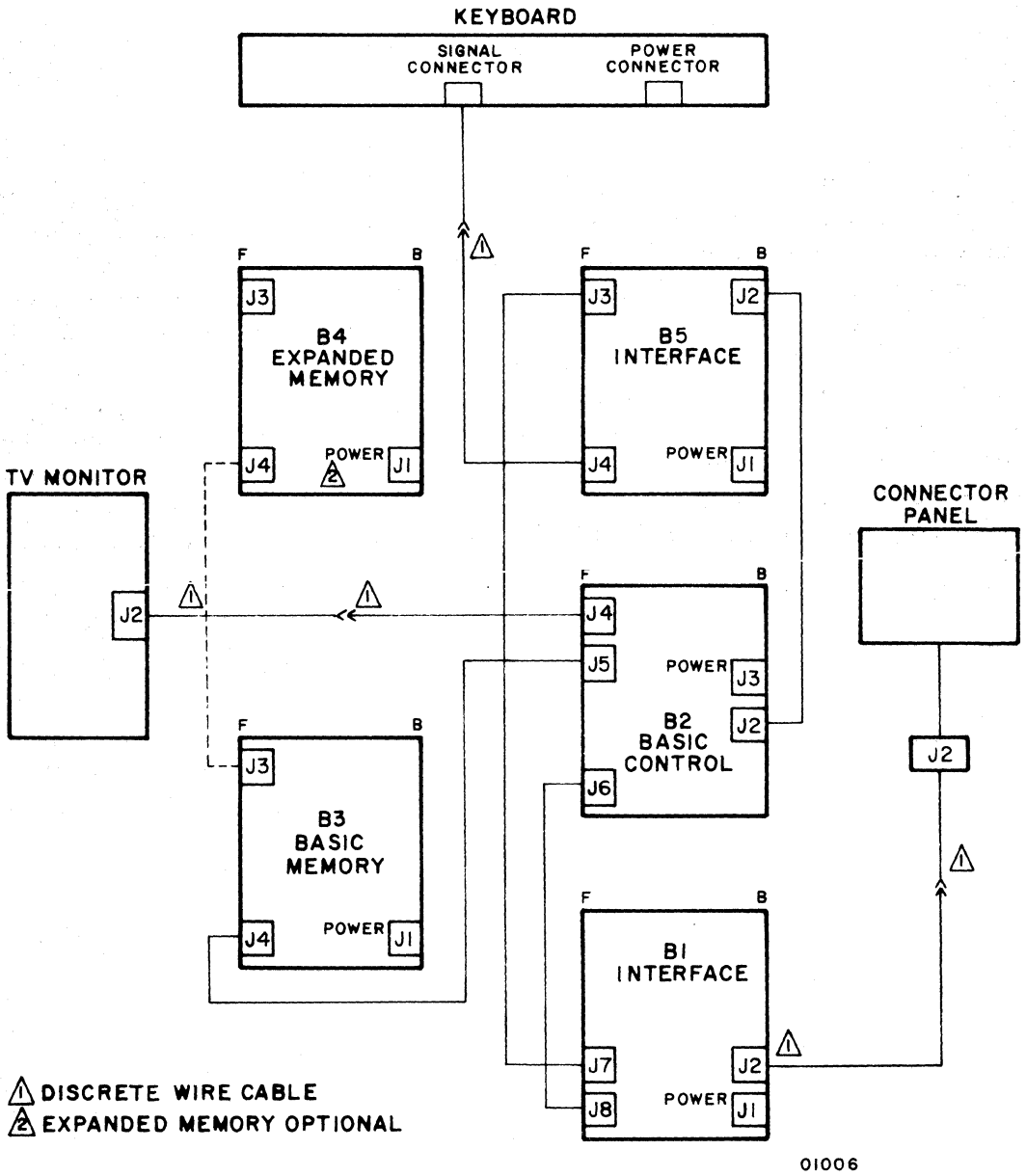

Figure 5-1. Signal Interconnection Diagram

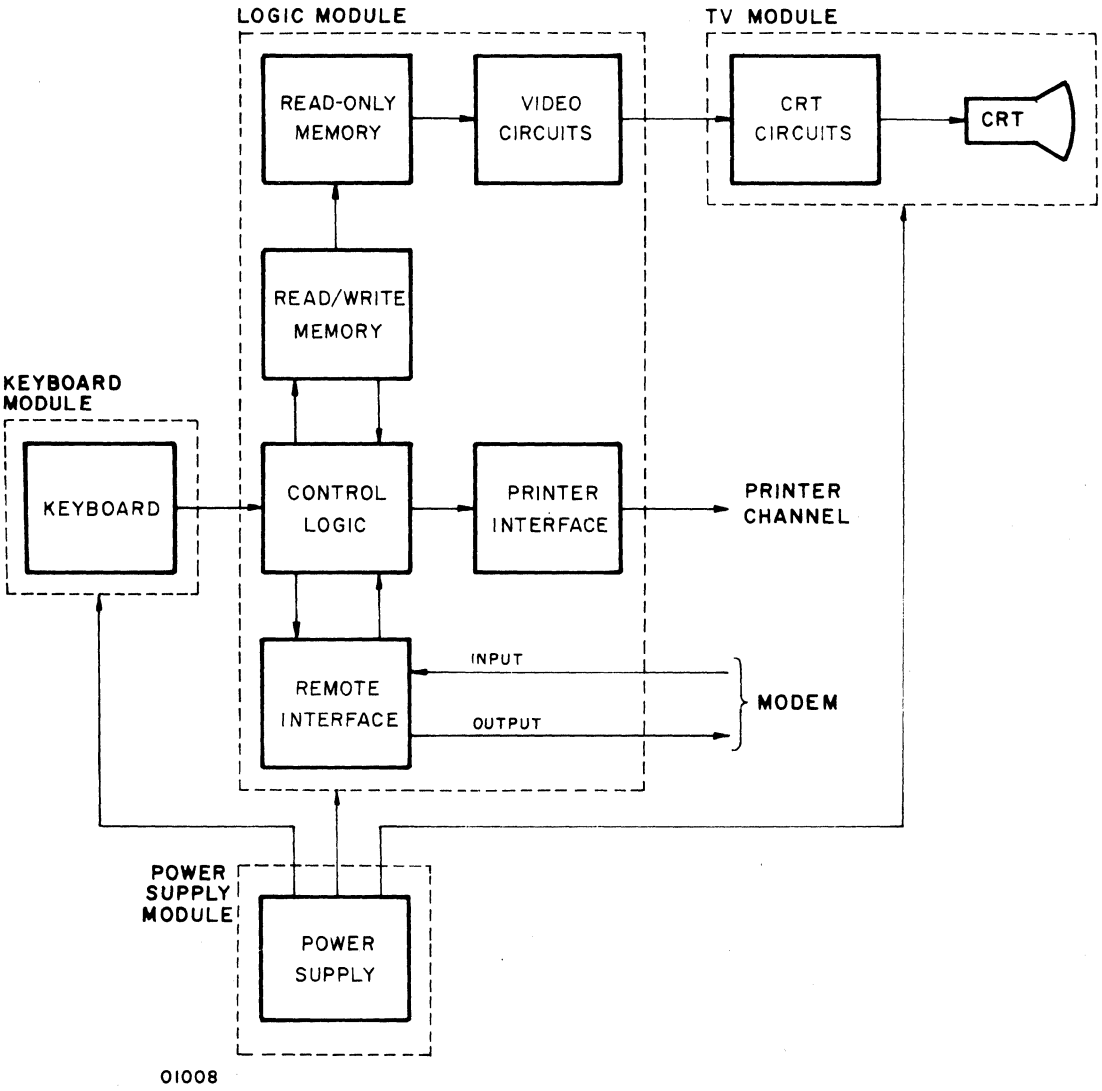

Figure 5-2. Display Terminal Configuration

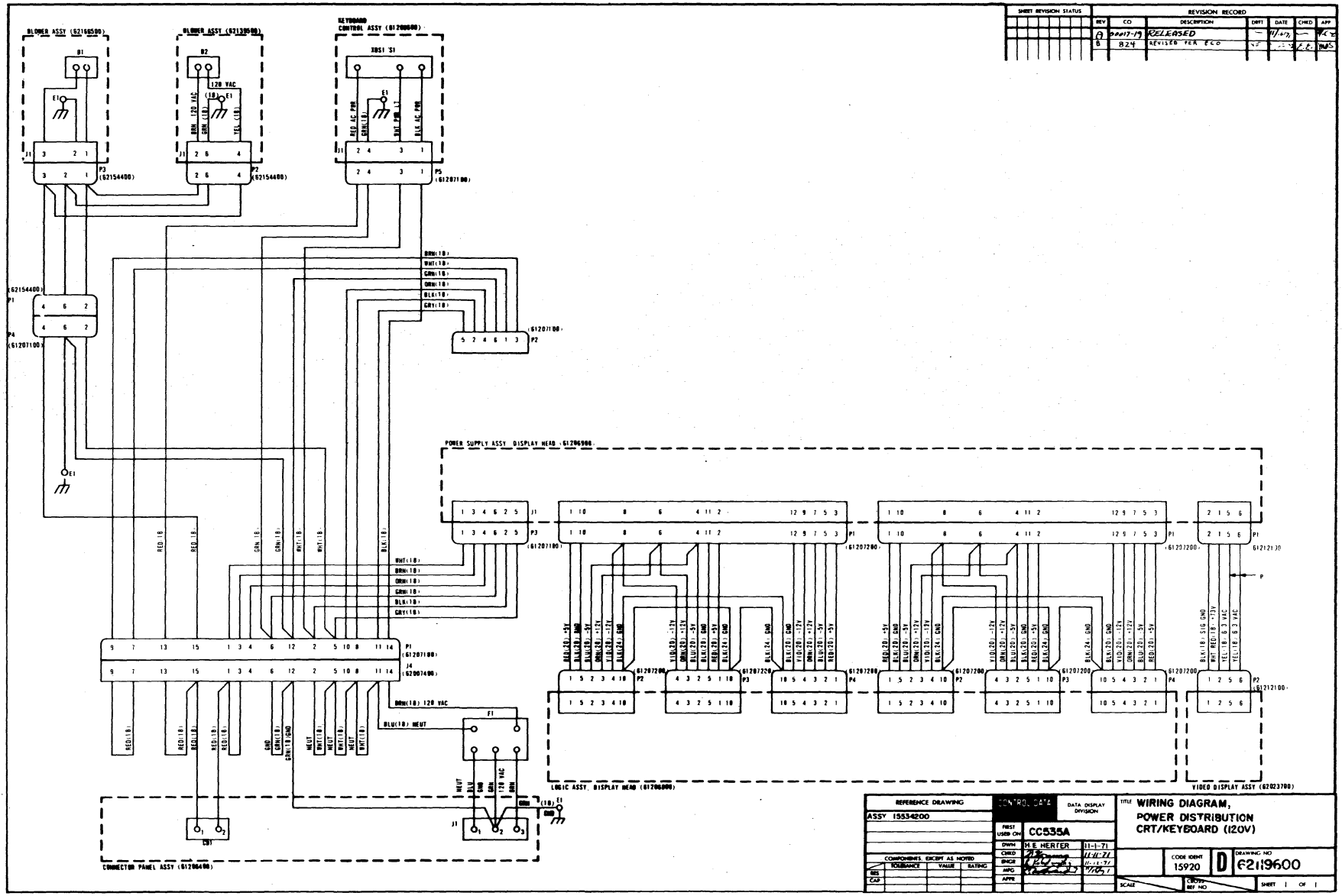

Figure 5-3. Power Distribution (120-Volt Model)

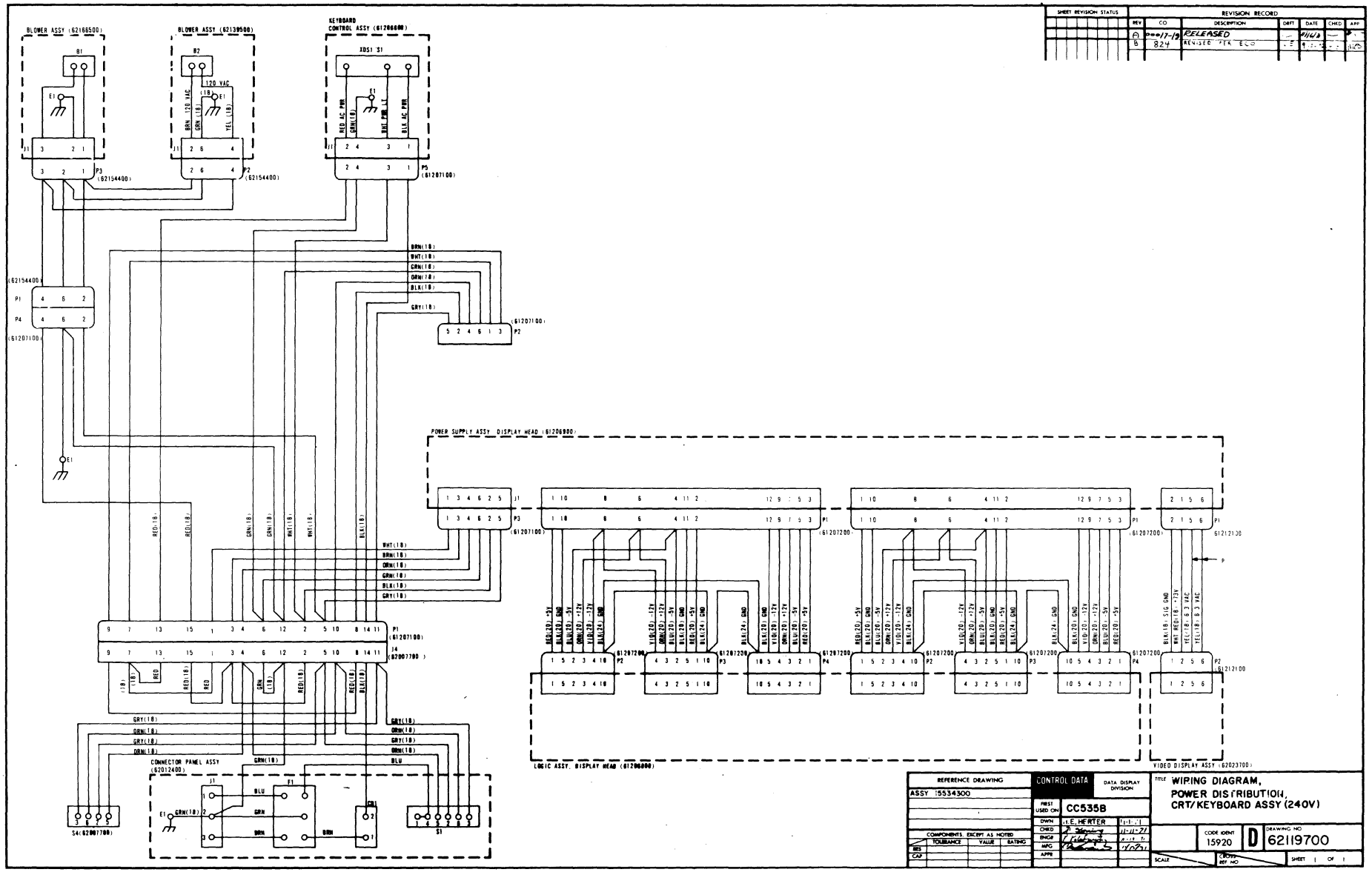

Figure 5-4. Power Distribution (240-Volt Model)

SECTION 6

MAINTENANCE

Maintenance involves two basic types — preventive and corrective. Preventive maintenance involves simple tasks which will help keep the terminal operative. Corrective maintenance is performed after a fault has been noted and isolated. These tasks are more complicated. Before performing corrective maintenance, become familiar with the safety procedures and precautions given in this section.

SAFETY PROCEDURES AND PRECAUTIONS

Anyone working on a terminal when the hood is removed should be familiar with service procedures and precautions before starting.

SAFETY PROCEDURES

Safety procedures should be developed so they are automatically observed as a habit.

1) Always use care when working with electrical circuits to prevent injury to yourself or damage to the circuits.
   a) Do not touch bare metal contacts while power is applied.
   b) Turn off terminal power and remove ac power cord before removing or installing a module.
   c) All tools should be insulated and used with care to prevent shorting or other damaging errors.
2) Use care in handling the CRT.
   a) The CRT is a glass envelope which has been evacuated. Do not nick, scratch, or subject any part of the CRT to undue pressure. Rough handling of the CRT could cause an implosion due to the vacuum in the CRT. An implosion would not only destroy the CRT, but also badly injure the person handling the tube.
   b) Respect all bare connections within the TV module. Stay away from the high voltage circuit which is connected to the flare part of the CRT.

3) Respect all voltages.

   a) Low voltages may cause discomfort or involuntary physical reflexes leading to bruises.

   b) High voltages may cause minor burns and involuntary reflexes leading to bruises.

SAFETY PRECAUTIONS

The following safety precautions should be observed when adjusting the TV module.

1) Do not adjust TV module from front of terminal. It is not possible to see where you are placing the adjusting tool. A personal shock or a circuit short may result.

2) Have assistance or use a mirror for observing the CRT screen when adjusting the module operation.

3) Use special care when adjusting the vertical linearity, vertical size, and focus. They are located in the base of the TV module and the adjustment tool must be placed carefully to avoid touching the wrong part of the circuit while making adjustments.

4) The yoke has bare tabs which could cause a mild shock if touched while adjusting the yoke.

PREVENTIVE MAINTENANCE

Preventive maintenance describes those tasks that should be performed during emergency maintenance by the one answering the emergency maintenance call. This maintenance consists of only light housekeeping tasks. No electrical or mechanical adjustments are required. Verify that the equipment operators/users have been performing the preventive maintenance tasks which are their responsibility (the first four items in the following list).

To perform preventive maintenance on the display terminal, perform the following:

- Remove dust from keyboard with a soft-bristled brush.
- Clean exterior of equipment with a damp, lint-free cloth.
- Clean face of display screen with a clean, soft cloth (any grit on cleaning cloth scratches viewing screen) and a mild glass-cleaning solution (name-brand aerosol or spray glass cleaners are suitable).

- Remove and clean blower air filter as necessary (filter removes from outside). Filter must be kept clean and unobstructed or display terminal may overheat. A water and soap solution is sufficient to clean air filter. Be sure filter is dry before replacing.
- If it becomes necessary to clean inside of display screen and face of CRT, remove the cabinet hood and the view screen face plate (see Remove and Replace Procedures, this section). This procedure is for experienced personnel only.

CORRECTIVE MAINTENANCE

Corrective maintenance is performed as a result of troubleshooting described in Section 7. This can include the adjustment of the power supply output voltages or the adjustment of the display screen image using the TV module adjustments. Part of corrective maintenance involves the exchange of a good module for a defective module. Procedures for removing and replacing these modules are included in this section. Maintenance procedures in this section require the removal of the hood. Before removing the hood, refer to the procedures for removing the hood. While the hood is removed observe all safety procedures and precautions.

POWER SUPPLY MODULE ADJUSTMENTS

A slot in the top of the power supply provides access to the test points (TP) and voltage adjustment screws. To adjust the dc output voltages of the power supply, refer to figure 6-1. If the +5-volt test point does not indicate a voltage present, then check the power supply fuse.

Procedure for adjusting power supply voltages:

+73-Volt Adjustment

1) Set multimeter for reading +73 volts.
2) Connect negative test lead of multimeter to black test point.
3) Connect positive test lead of multimeter to yellow test point.
4) Adjust potentiometer R5 until multimeter indicates +73 volts.
5) Remove positive test lead from test point.

+12-Volt Adjustment

1) Set multimeter for reading +12 volts.
2) Connect negative test lead of multimeter to black test point.
3) Connect positive test lead to orange test point.
4) Adjust potentiometer R10 until multimeter indicates +12 volts.
5) Remove positive test lead from orange test point.

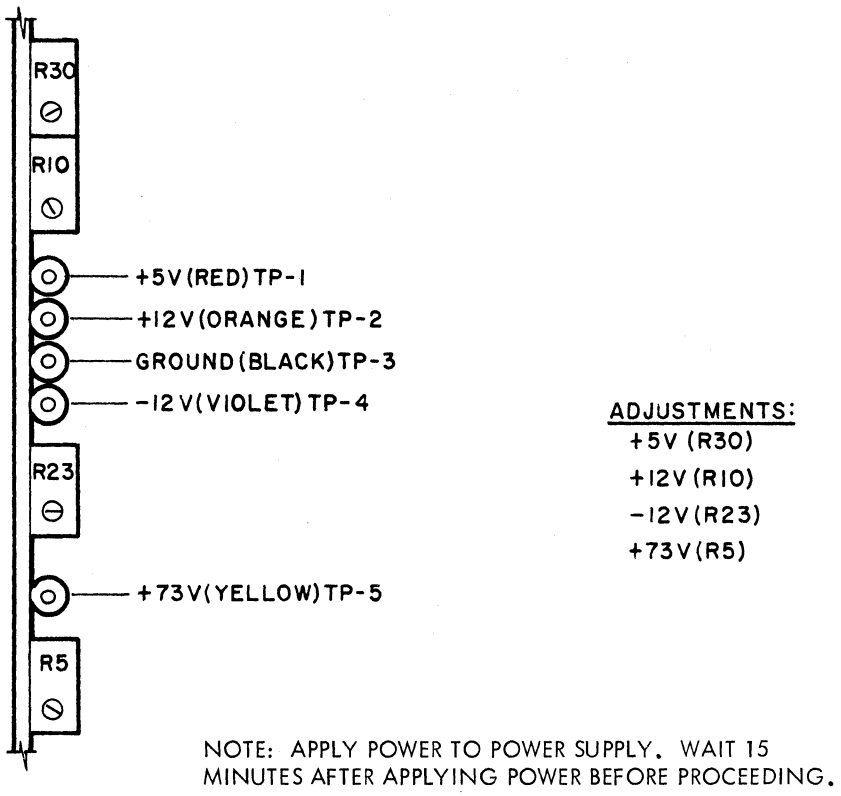

Figure 6-1. Power Supply Adjustments

+5-Volt Adjustment

1) Set multimeter for reading +5 volts.
2) Connect negative test lead of multimeter to black test point.
3) Connect test lead to red test point.
4) Adjust potentiometer R30 until multimeter indicates +5 volts.
5) Remove positive test lead from red test point.

-12-Volt Adjustment

1) Set multimeter for reading -12 volts.
2) Connect positive test lead of multimeter to black test point.
3) Connect negative test lead of multimeter to voilet test point.
4) Adjust potentiometer R23 until multimeter indicates -12 volts.
5) Remove test leads from test points of power supply.

TV MODULE ADJUSTMENTS

The TV module, figure 6-2, contains several adjustments which affect the display on the TV screen. These adjustments are accessible only when the hood has been removed. Depending on the repair time available and the particular problem encountered with the terminal, you may adjust these circuits instead of removing and replacing the TV module. The following paragraphs describe each adjustment which may be performed on site. Figure 6-3 identifies each adjustment control referenced in the following paragraphs. Any adjustment not described in the following paragraphs is not intended for on-site maintenance. Figure 6-4 shows a normal test pattern with the raster centered and the characters sharp and clear.

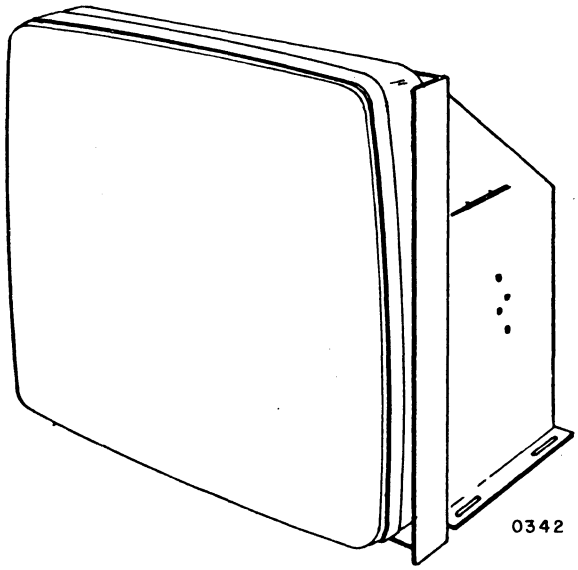

Figure 6-2. TV Module

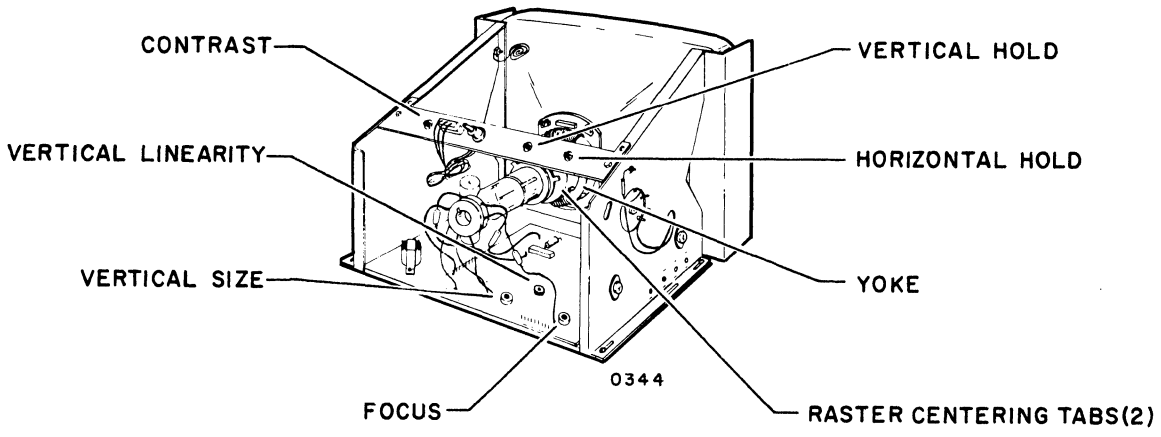

Figure 6-3. TV Module Adjustment Locations

CHARACTERISTICS

H's sharp and clear with dark areas around A's.
Raster is centered and positioned vertically.

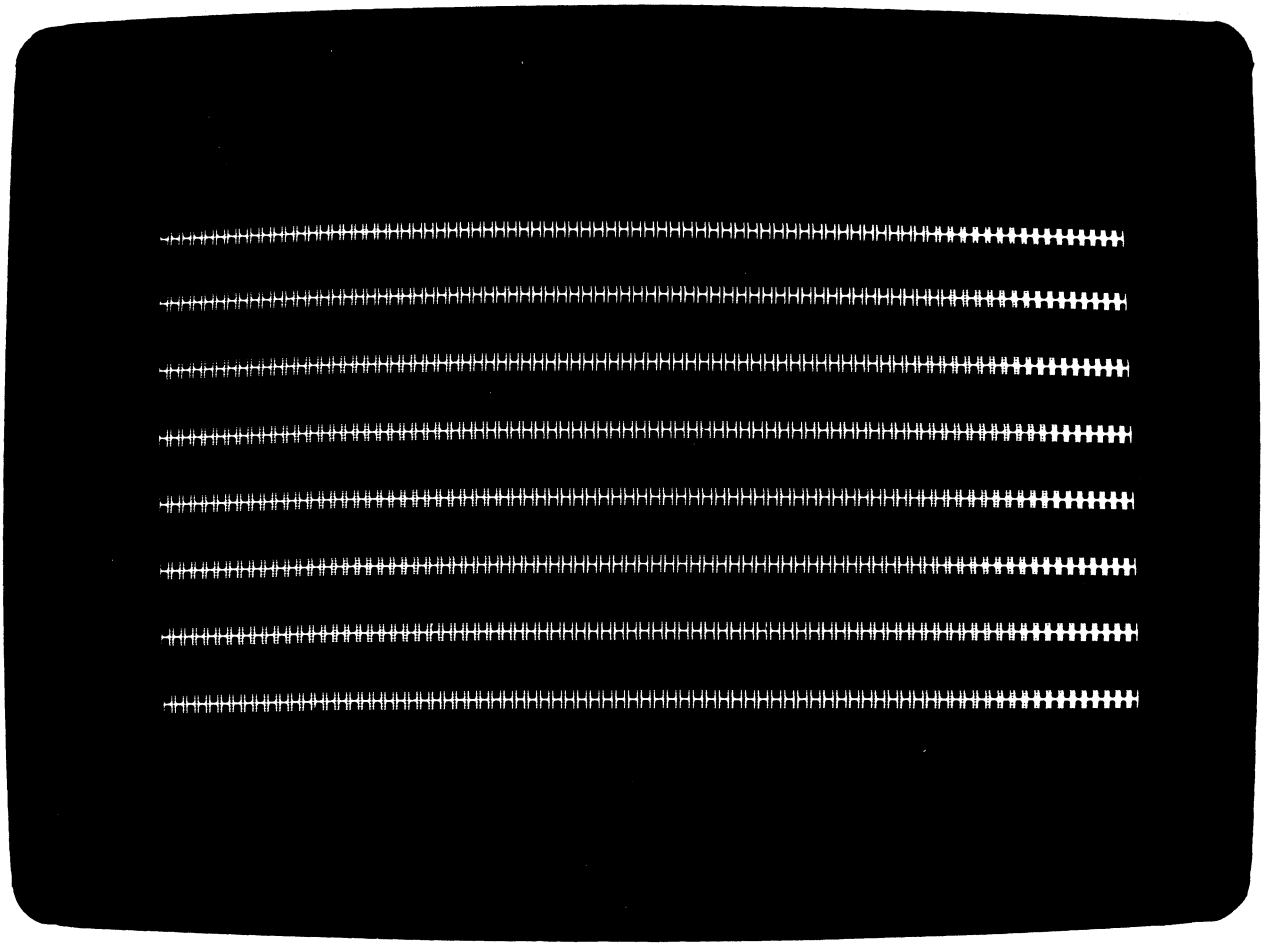

0878

Figure 6-4. Normal Test Pattern

Adjustment Controls

Table 6-1 lists the controls located on the TV module. These controls may be adjusted to correct faulty displays on the display screen. A description of the corrections and adjustments for display screen faults appears in the following paragraphs.

TABLE 6-1. TV MODULE ADJUSTMENT CONTROLS

ADJUSTMENT CONTROL	PURPOSE	TYPE	FIGURE NUMBER SHOWING INCORRECT ADJUSTMENT
Contrast	Adjusts degree of difference between black and white areas on display screen.	Potentiometer	6-5, 6-6
Vertical Hold	Prevents display from rolling vertically.	Potentiometer	6-7, 6-8
Horizontal Hold	Prevents display from tearing horizontally.	Potentiometer	6-9
Focus	Gives sharp, clear formations of letters.	Potentiometer	6-10
Vertical Size	Determines height of display.	Potentiometer	6-11
Vertical Linearity	Provides uniform height of all display lines.	Potentiometer	6-12
Yoke	Rotates display clockwise or counterclockwise.	Magnetic Deflection Coil	6-13
Raster Centering	Moves display left-right or up-down.	Magnets	6-14
Horizontal Size	Determines width of display.	Slug Tuneable Coil	6-15

Note: Apply power to power supply. Wait 15 minutes after applying power before proceeding.

Contrast

To adjust the contrast, perform the following steps, and refer to figures 6-5 and 6-6.

1) Turn contrast control (slot head adjustment screw) fully counterclockwise (minimum contrast).
2) Turn brightness control clockwise until raster is just visible.
3) Turn contrast control clockwise while at the same time turning brightness control counterclockwise until H's are clear and distinct.
4) Continue rotating controls until contrast control makes dots of H's begin to bloom (defocus).

5) Turn contrast control counterclockwise until dots are again sharp and clear.

6) Adjust brightness control for desired brightness of display. (To prolong life of CRT, brightness of display should not be set higher than necessary.)

Vertical Hold

Adjust vertical hold control (slot head adjustment screw) until display does not roll or slip frames in vertical direction. See figures 6-7 and 6-8.

To adjust vertical hold control, perform the following steps:

1) Turn vertical hold control clockwise until display begins to slip or roll vertically, and note setting of control.

2) Turn vertical hold control counterclockwise until display begins to slip or roll vertically, and note setting of control.

3) Set vertical hold control to midpoint of two settings noted in previous steps.

Horizontal Hold

Adjust horizontal hold control (slot head adjustment screw) until display does not warp diagonally. See figure 6-9.

To adjust the horizontal hold control, perform the following steps:

1) Turn horizontal hold control clockwise until display begins to tear horizontally, and note setting of control.

2) Turn horizontal hold control counterclockwise until display begins to tear horizontally, and note setting of control.

3) Set horizontal hold control to midpoint of two settings noted in previous steps.

Focus

Adjust focus control (slot head adjustment screw) until all H's in display are sharp and clear. See figure 6-10.

Vertical Size

Adjust vertical size control (cross head adjustment screw) for display height of 5.25 ± .25 in. (13.5 ± 0.8 cm). See figure 6-11.

Vertical Linearity

Adjust vertical linearity control (slot head adjustment screw) for equal height of H's in all display lines (control has greatest effect upon top and bottom lines). See figure 6-12.

Yoke

To rotate raster clockwise or counterclockwise, perform the following steps. See figure 6-13.

1) Loosen nut on yoke clamp on neck of CRT.
2) Rotate yoke in direction necessary to place raster in level position (no tilt).
3) Tighten nut carefully on yoke clamp so yoke is held firmly to CRT neck.

Raster Centering

Adjust raster left-right or up-down by moving the two raster centering tabs on neck of CRT. Readjust focus, if necessary, after completing raster positioning. See figure 6-14.

Horizontal Size

Adjust horizontal size control for display wide of 9-1/4 ± 1/4 in. (13 ± 0.6 cm). See figure 6-15.

CHARACTERISTICS

H's blurred with horizontal
bar of H's pronounced.

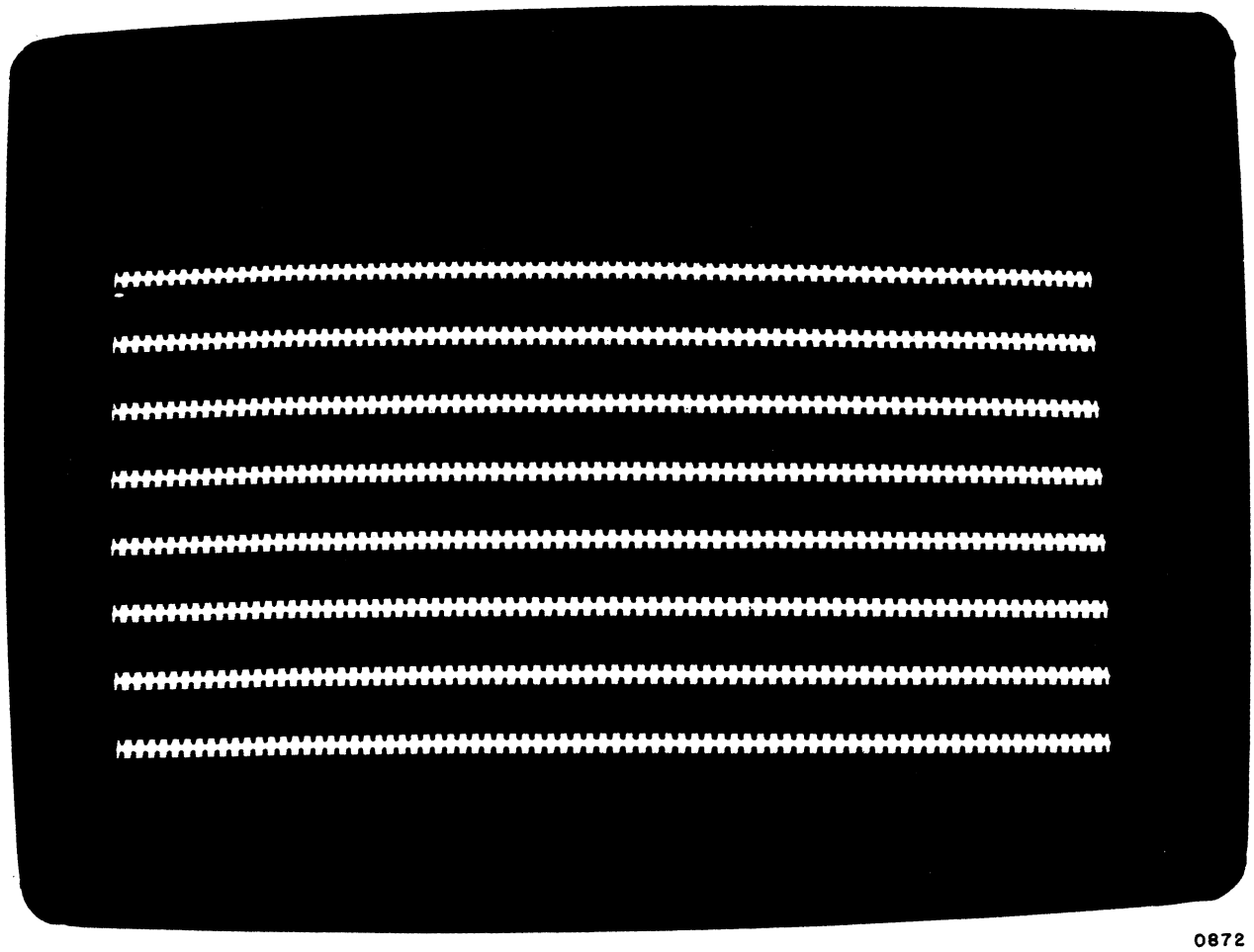

Figure 6-5. Contrast Too High

CHARACTERISTICS

H's not sharp and clear. Light-gray areas around H's.

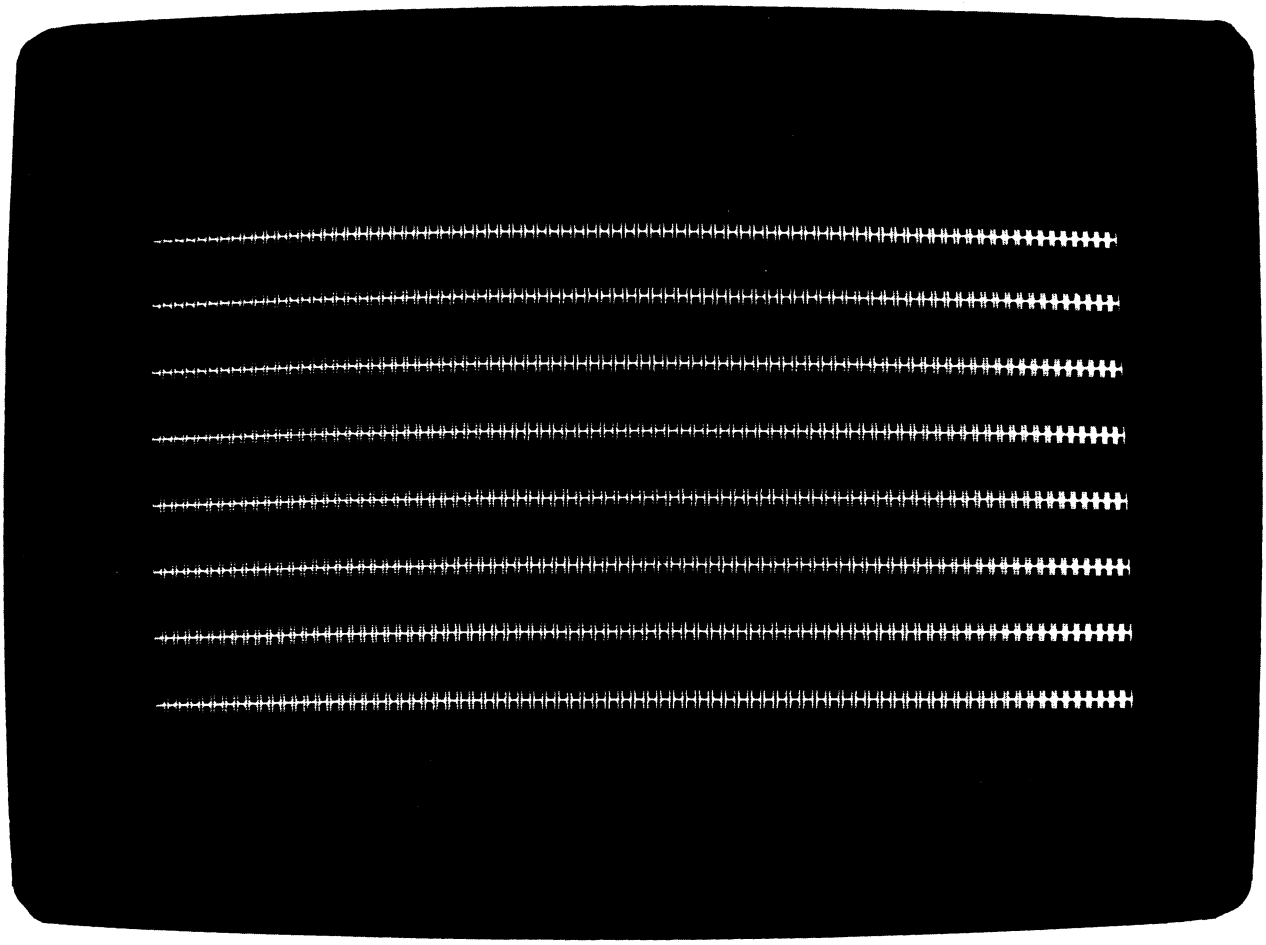

0879

Figure 6-6. Contrast Too Low

CHARACTERISTICS

Results in no vertical hold. Display slowly slips frames vertically.

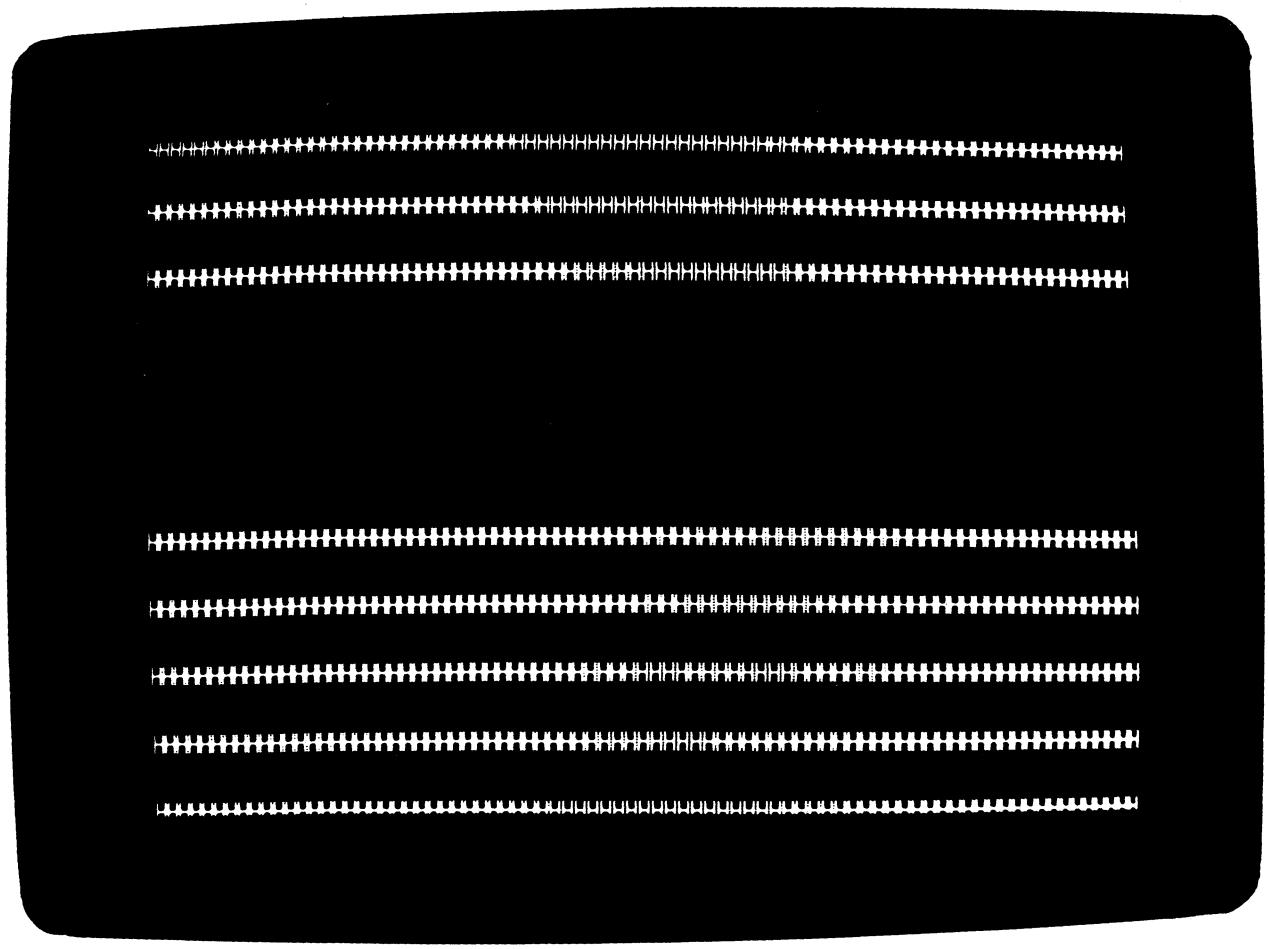

Figure 6-7. Vertical Scanning Not Synchronized (Slips Frames)

CHARACTERISTICS

Results in no vertical hold. Display rolls fast vertically.

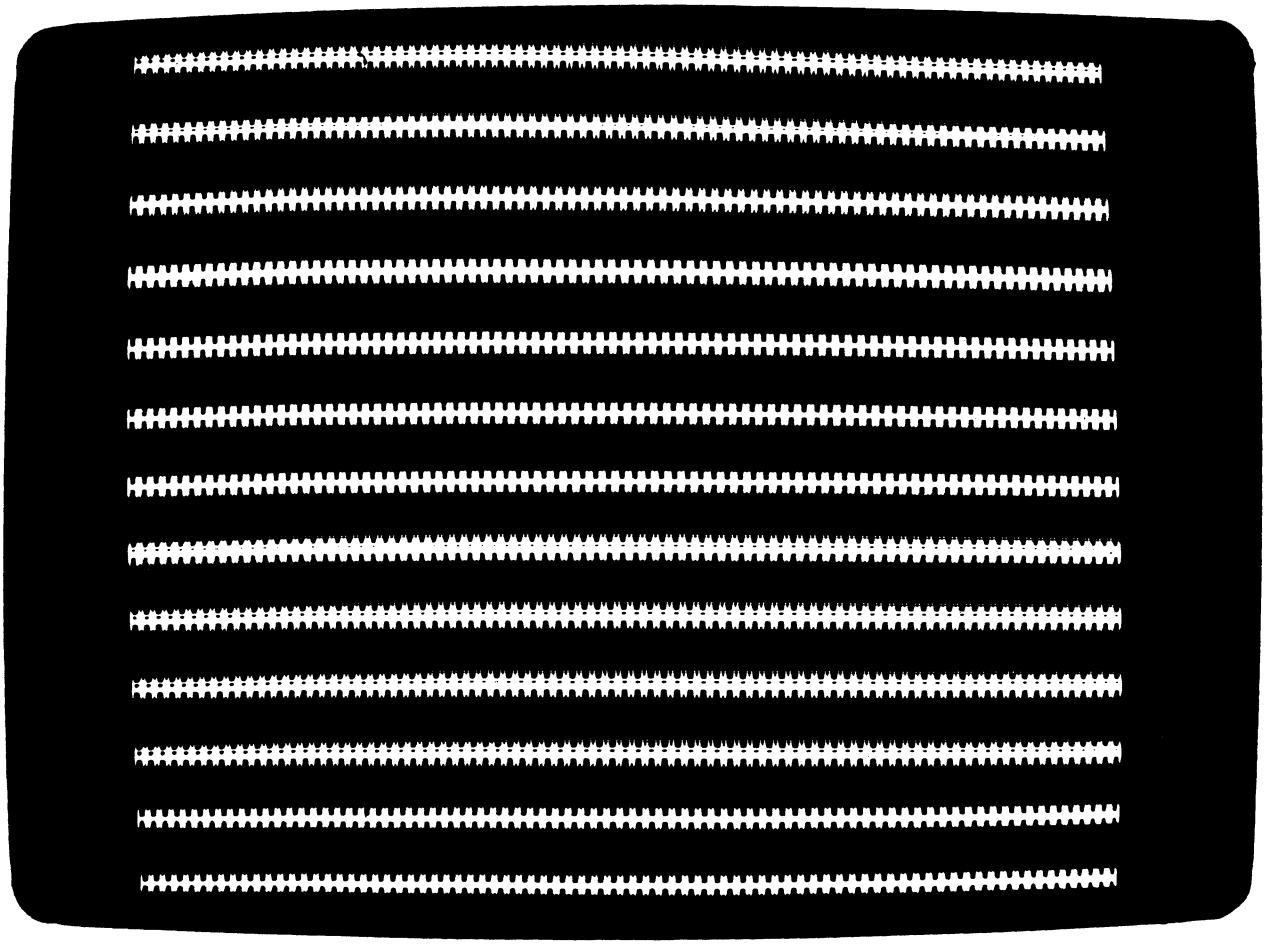

0875

Figure 6-8. Vertical Scanning Not Synchronized (Rolls)

CHARACTERISTICS

Results in no horizontal hold. Display tears horizontally.

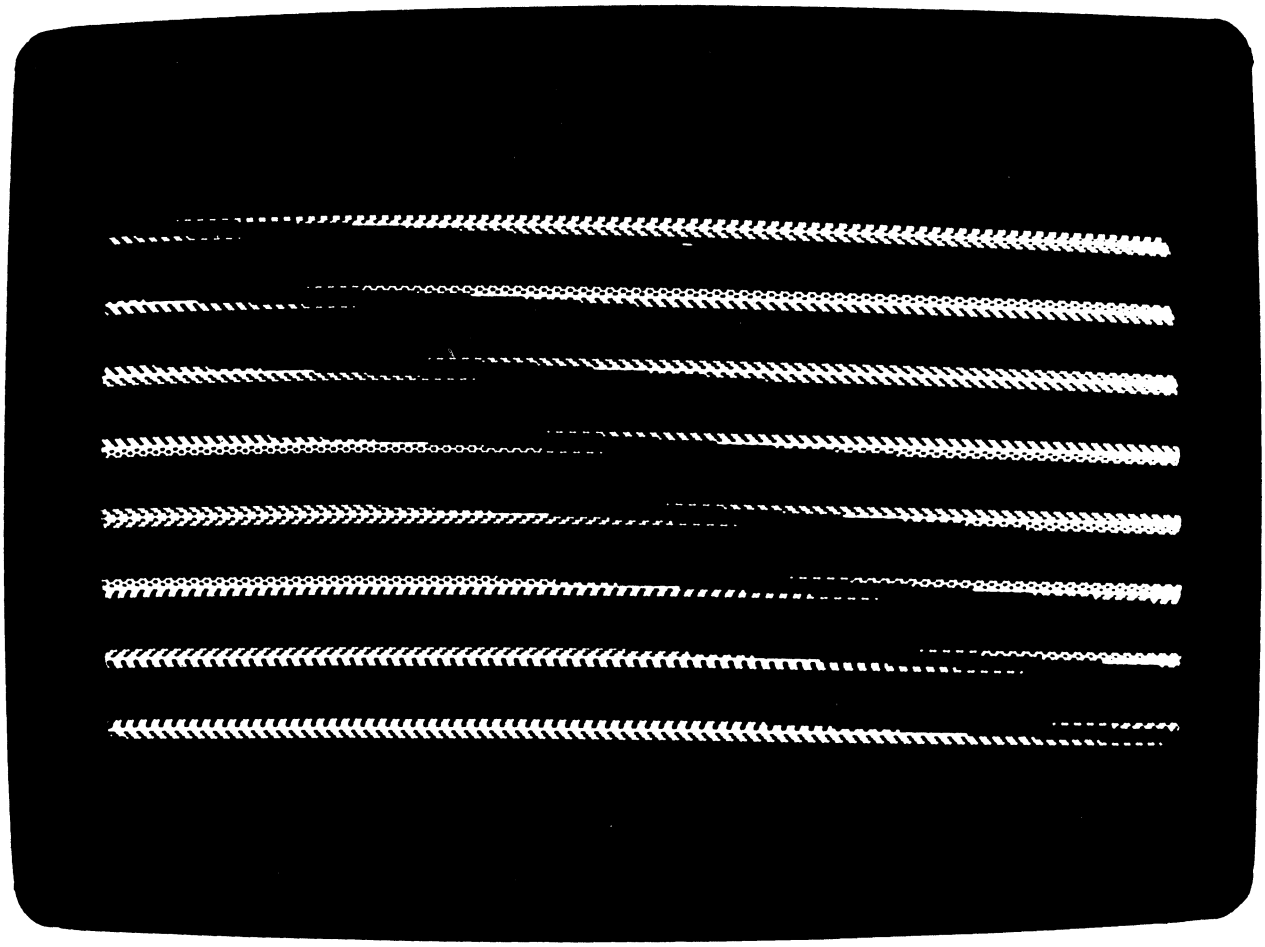

0867

Figure 6-9. Horizontal Scanning Not Synchronized (Tears Horizontally)

CHARACTERISTICS

Dot formations of H's are out of focus.

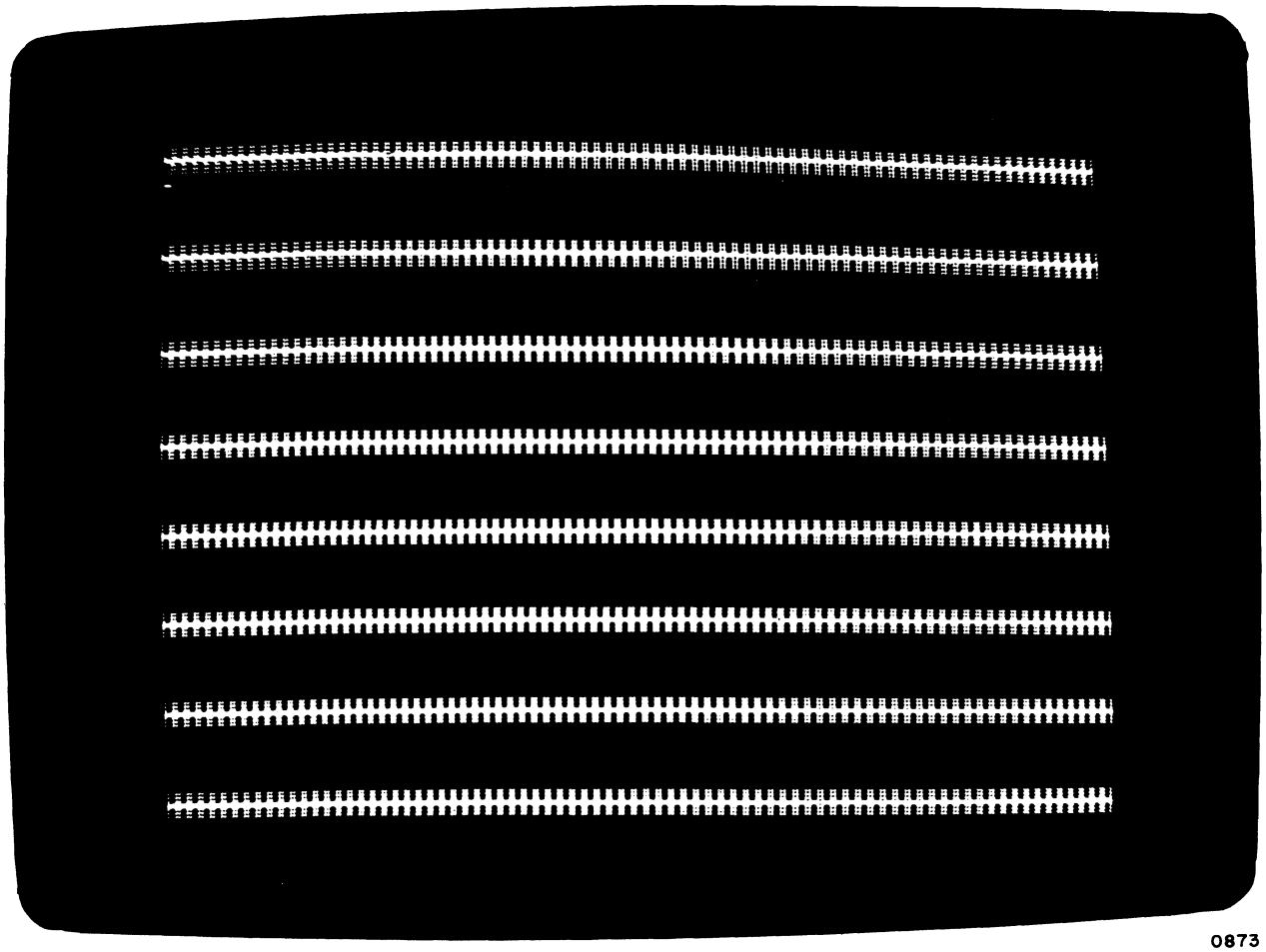

Figure 6-10. Effects of Incorrect Focusing Adjustment

CHARACTERISTICS

Display has insufficient height.

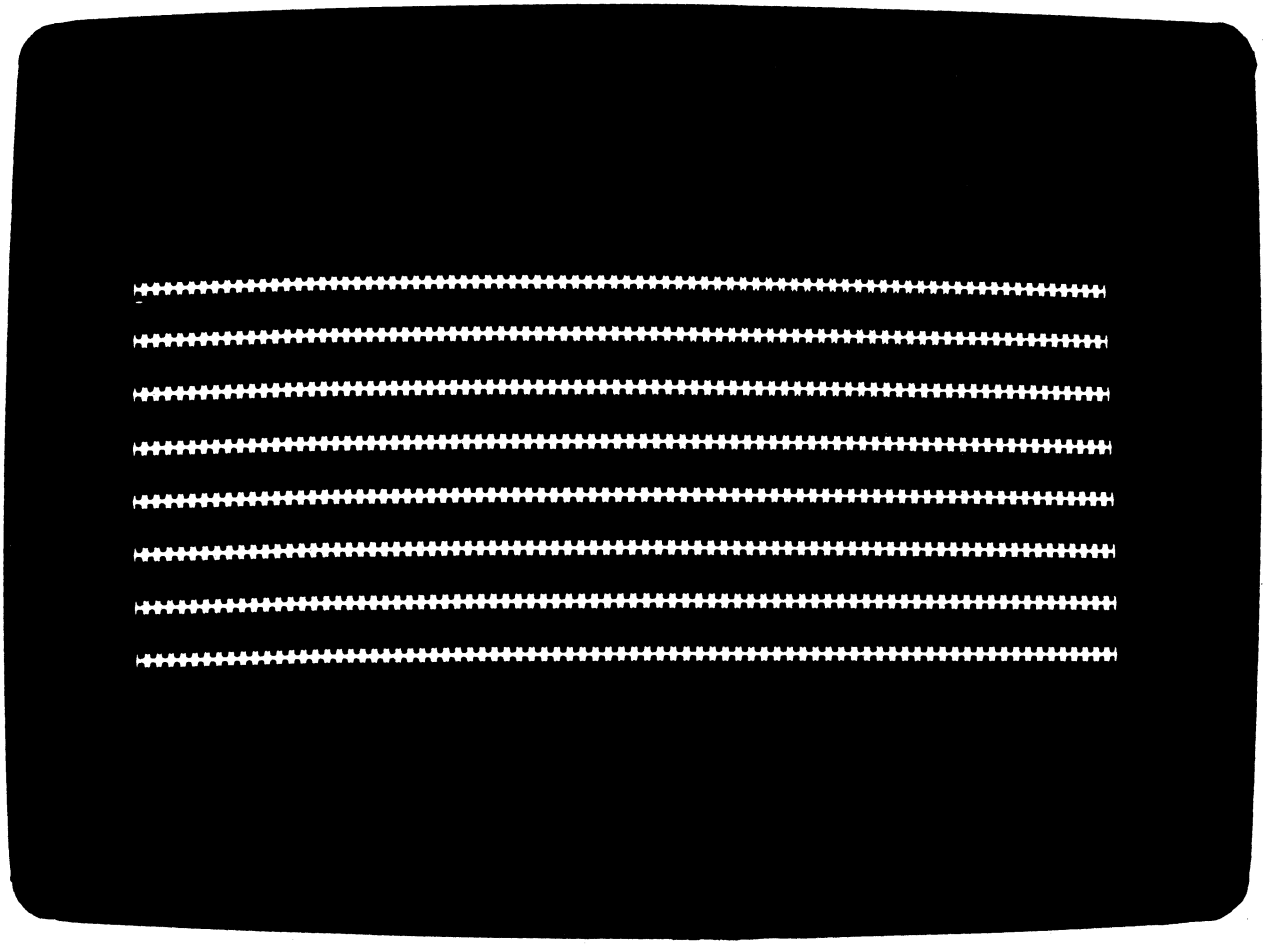

0874

Figure 6-11. Vertical Size Incorrectly Adjusted

CHARACTERISTICS

Depending on adjustment, either top or bottom row of H's is compressed vertically while the other is expanded vertically.

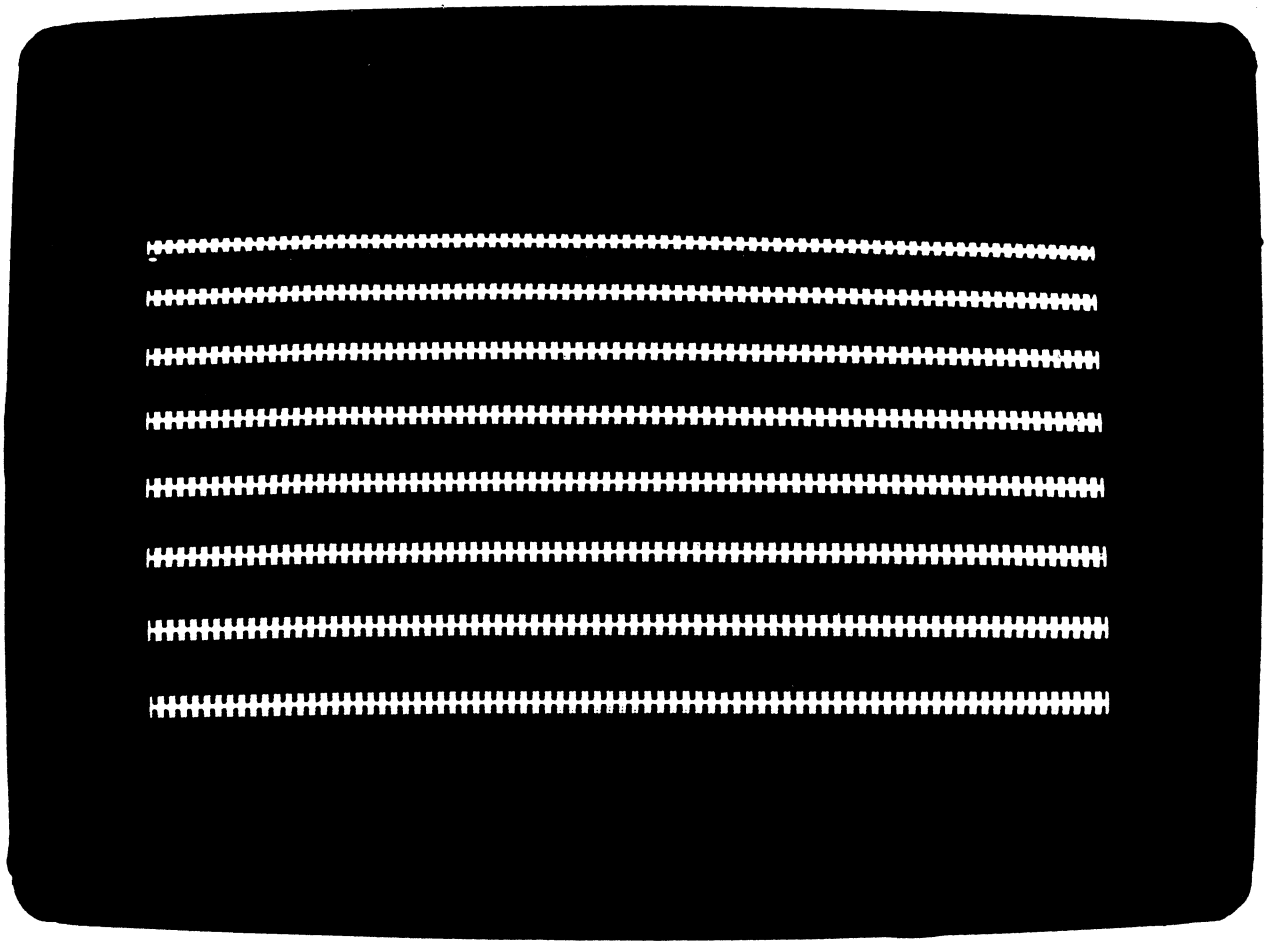

0868

Figure 6-12. Vertical Linearity Incorrectly Adjusted

CHARACTERISTICS

Raster filled with repect to mask because deflection of yoke is tilted.

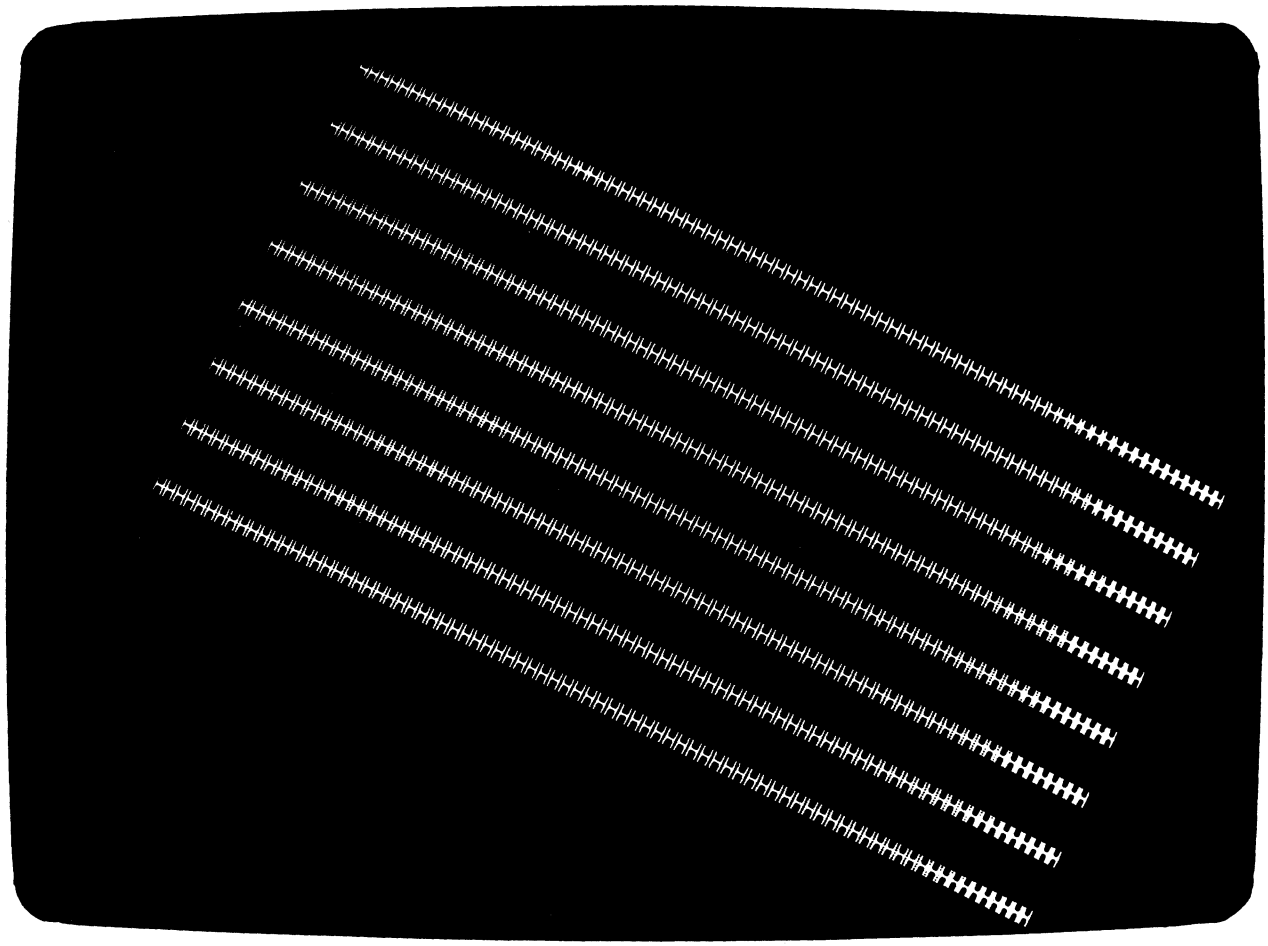

0877

Figure 6-13. Yoke Incorrectly Adjusted

CHARACTERISTICS

Display is below and to the right of correct position.

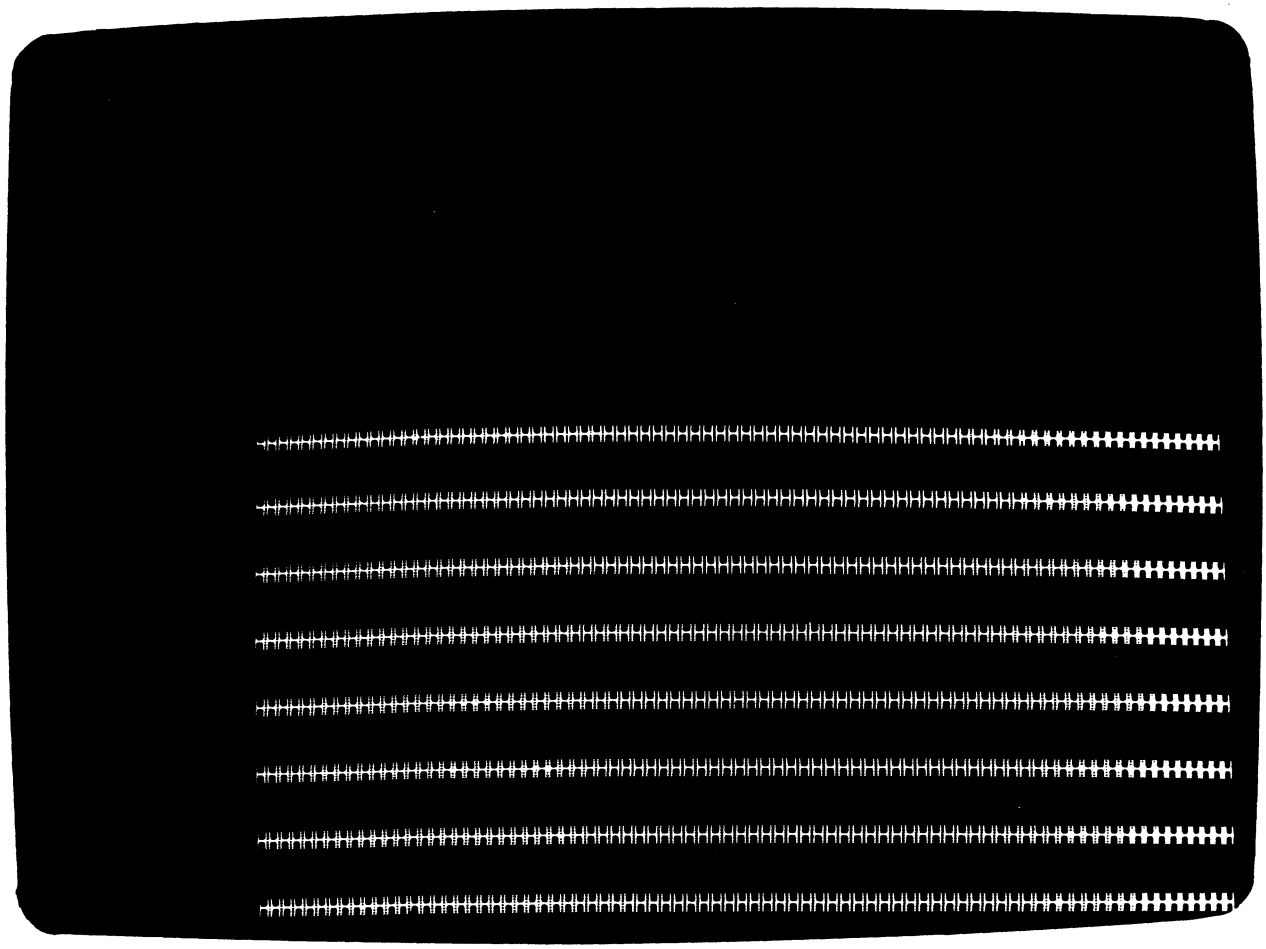

0876

Figure 6-14. Raster Centering Incorrectly Adjusted

CHARACTERISTICS

Display has insufficient width.

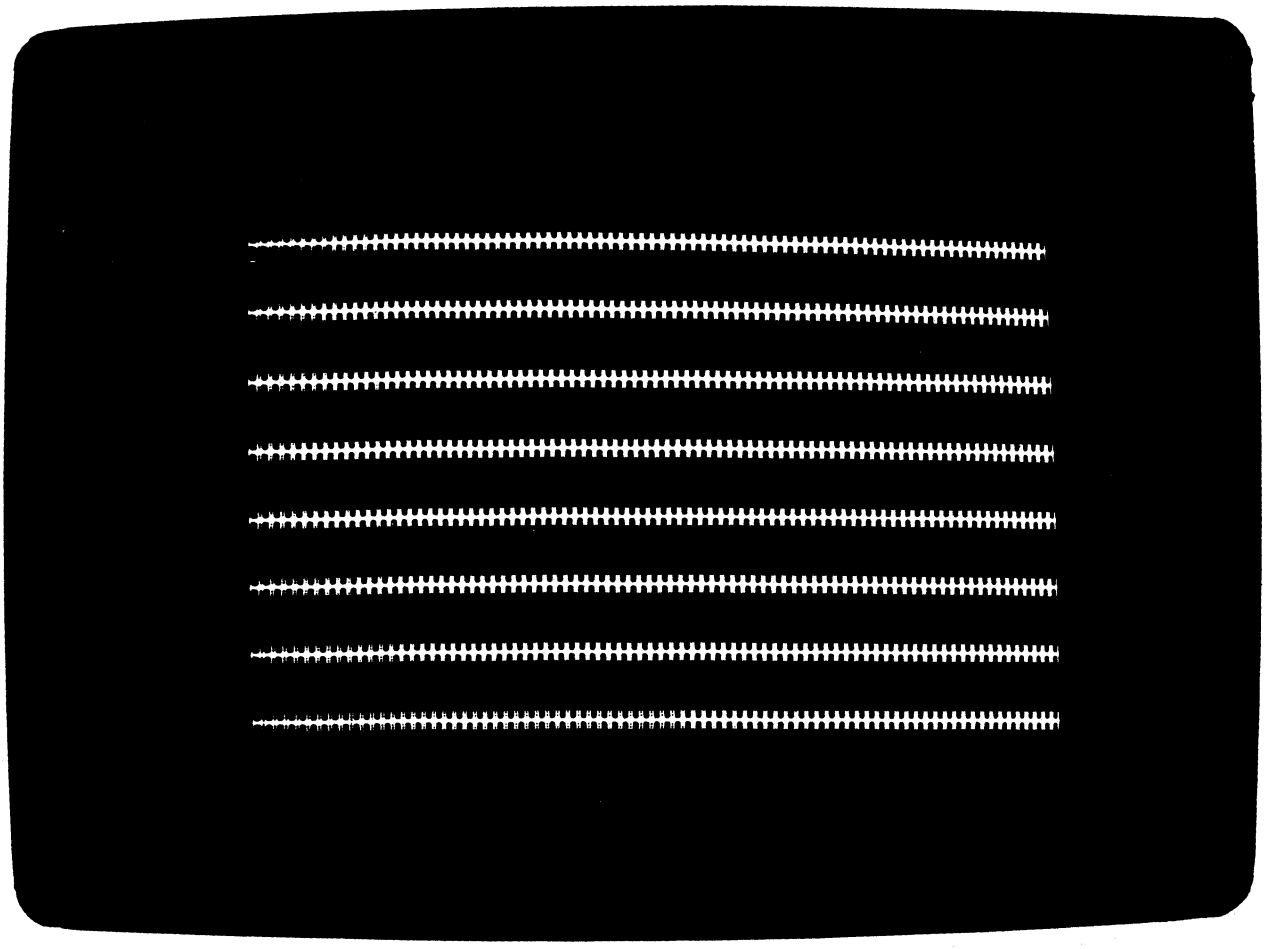

0869

Figure 6-15. Horizontal Size Incorrectly Adjusted

REMOVE AND REPLACE PROCEDURES

To prevent personal injury or equipment damage resulting from electrical shock, the following three steps must always be followed when removing or replacing assemblies or subassemblies of the display terminal.

1) Press POWER indicator/switch. POWER indicator extinguishes.
2) Remove display terminal ac power cord from site ac power outlet.
3) Clear all unnecessary equipment from work area.

Cabinet Hood

To remove the cabinet hood, perform the following:

1) Verify display terminal ac power cord is removed from site power outlet.
2) Disconnect communications cable connectors from connector panel.
3) Remove two mounting screws located at lower back corners of cabinet hood (see figure 6-16).
4) Grasp both sides of hood and carefully slide it back toward rear of display terminal. Disconnect fan cable connector. Move hood until it clears framework of display terminal.

To replace the cabinet hood, reverse the preceding procedure making certain that the holding tabs (two on each side) on the inner side of the front side panels engage the keyboard mounting bracket. Also, connect fan cable connectors and the power plug interlock at the rear of the hood. They must be seated firmly with their mating connectors.

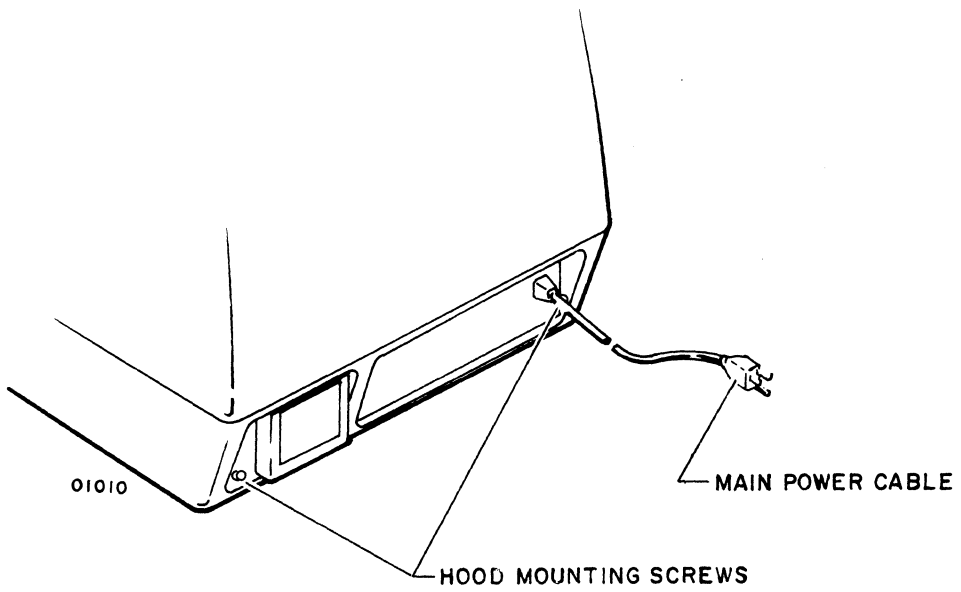

Figure 6-16. Cabinet Hood Mounting

Power Supply Module

To remove the power supply module, perform the following:

WARNING

When removing or replacing the power supply module, DO NOT STRIKE THE NECK OF THE CRT with the power supply. The extremely high vacuum of the CRT can cause it to implode producing serious injury. Safety goggles should be worn.

1) Verify display terminal ac power cord is removed from site power outlet.
2) Refer to cabinet hood removal and remove cabinet hood.
3) Place identifying tags on each cable to power supply so that the cables may be reconnected later to their correct connector.
4) Disconnect all cables from power supply module (see figure 6-17).
5) Remove two mounting screws from mounting tabs located at rear of power supply module (see figure 6-17).
6) Grasp power supply on each side and gently slide it toward rear of display terminal until the two front holddown tabs are free of holddown tab slots in main chassis.

To replace the power supply module, reverse the preceding procedure.

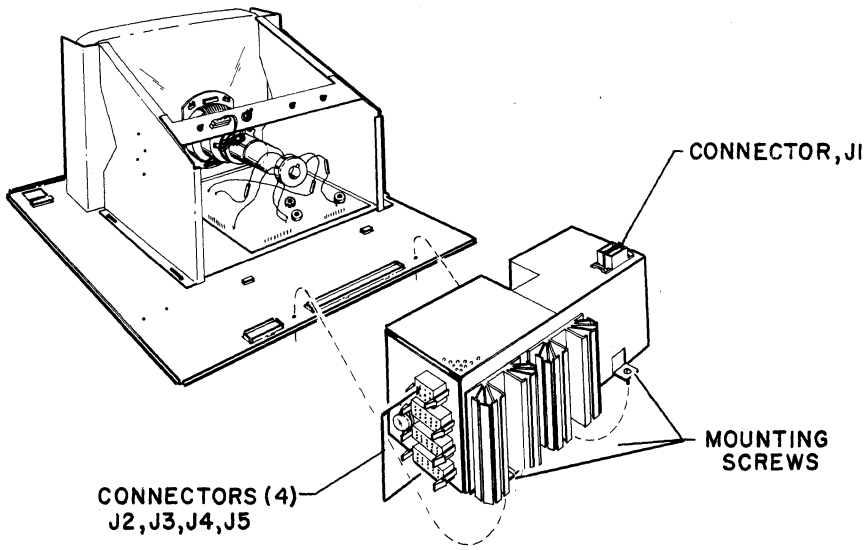

Figure 6-17. Power Supply Module Mounting

Logic Module

To remove the logic module, perform the following:

1) Verify display terminal ac power cord is removed from site power outlet.
2) Refer to cabinet hood removal and remove cabinet hood.
3) Place identifying tags on each external cable to logic module so that each cable may be reconnected later to its correct connector.
4) Disconnect all external cables from logic module (see figure 6-18). Do not disconnect inter-board cable connectors.
5) Remove two mounting screws, located at rear of logic module, from mounting tabs (see figure 6-18).
6) Slide logic module carefully toward rear of display terminal until holddown tab is free of holddown tab slot in main chassis.
7) Lift logic module clear of display terminal.

To replace the logic module, reverse the preceding procedure.

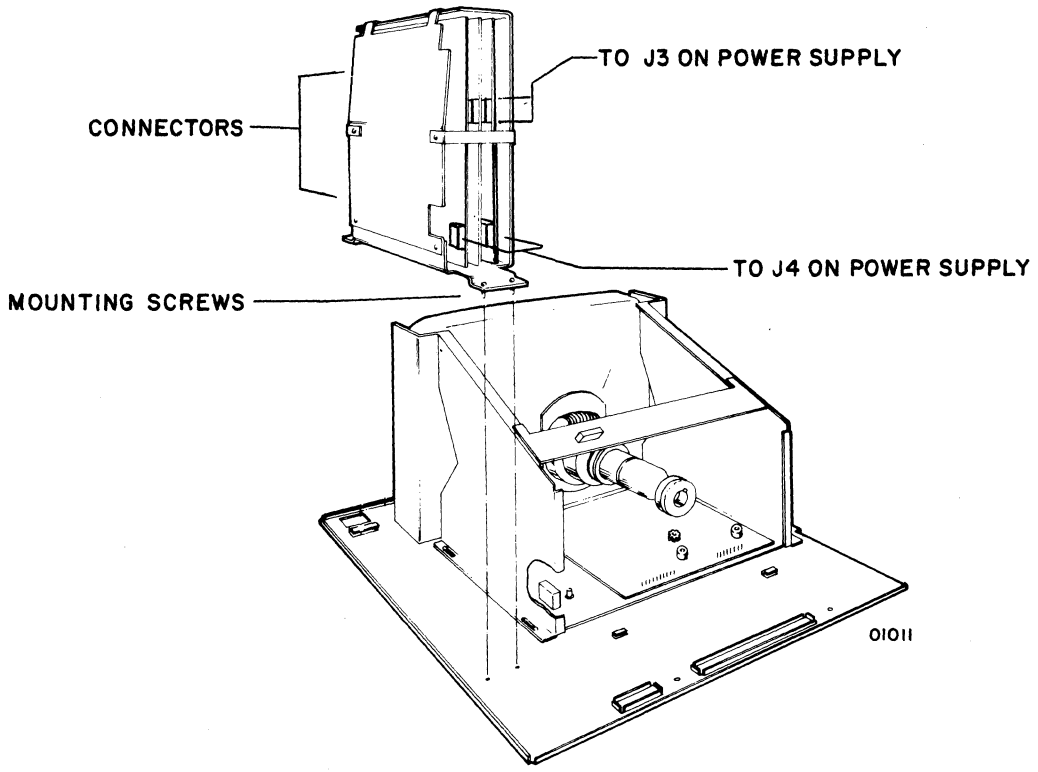

Figure 6-18. Logic Module Mounting

TV Module

To remove the TV module, perform the following:

WARNING

Use extreme care when HANDLING THE TV MODULE, as rough handling may cause the CRT to implode causing severe injury. Do not nick or scratch glass or subject it to any undue pressure during removal or replacement. When handling, use safety goggles and heavy gloves for protection.

1) Verify display terminal ac power cord is removed from site power outlet.
2) Refer to cabinet hood removal and remove cabinet hood.

WARNING

Discharge picture tube by shorting the anode connection to chassis ground. Use a well-insulated piece of wire.

3) Refer to display power supply removal and remove power supply.
4) Disconnect all cables from TV module (see figure 6-19).
5) Remove four mounting screws (see figure 6-19).
6) Grasp TV module on each side of its frame and carefully lift it clear of display terminal.

To replace the TV module, reverse the preceding procedure. If necessary, readjust focus after replacing TV module.

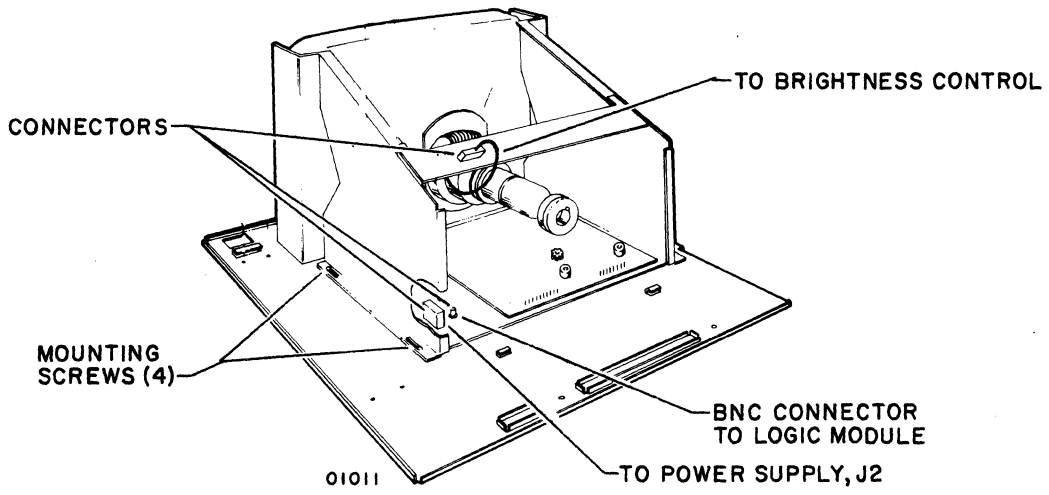

Figure 6-19. TV Module Mounting

Keyboard Module

To remove the keyboard module, perform the following:

1) Verify display terminal ac power cord is removed from site power outlet.
2) Refer to cabinet hood removal and remove cabinet hood.
3) Remove two screws located beneath front edge of keyboard.
4) Grasp keyboard on both sides and slide it forward until two mounting screws, located beneath rear corners of keyboard, are visible.
5) Disconnect cables from keyboard module (see figure 6-20).
6) Remove three mounting screws located beneath keyboard (one is located at front center of keyboard, and two are located at rear corners.
7) Slide keyboard back in its mounting channel until front holddown tabs are free of holddown slots in channel frame.
8) Lift keyboard free of display terminal.

To replace the keyboard module, reverse the preceding procedure.

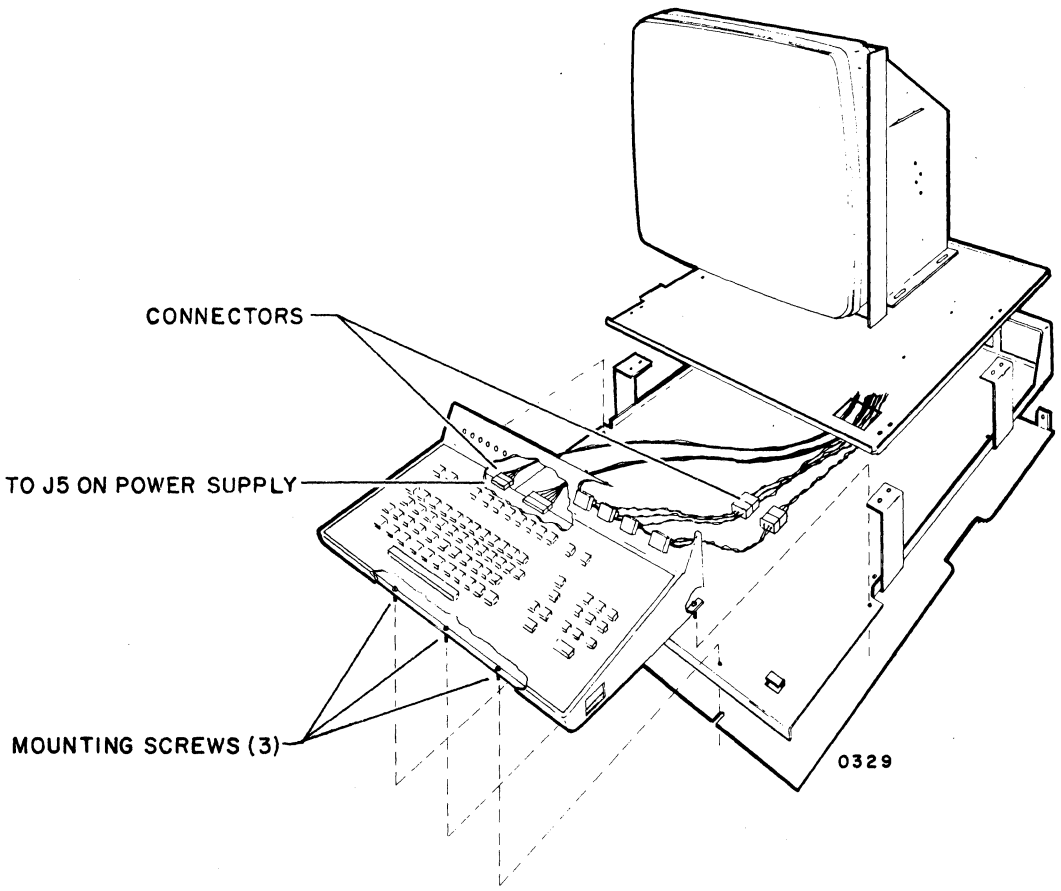

Figure 6-20. Keyboard Module Mounting

Display Faceplate

To remove the display faceplate, perform the following:

1) Verify display terminal ac power cord is removed from site power outlet.
2) Refer to cabinet hood removal and remove cabinet hood.
3) Remove screw holding Brightness control knob and remove knob.
4) Remove Keylock key.
5) Remove screws located on each side at the bottom of the plate which supports the faceplate, figure 6-21.
6) Grasp faceplate on each side and gently slide forward until holddown tabs along front edge disengage from mounting plate and lift free from plate.

To replace the display faceplate, reverse the preceding procedure.

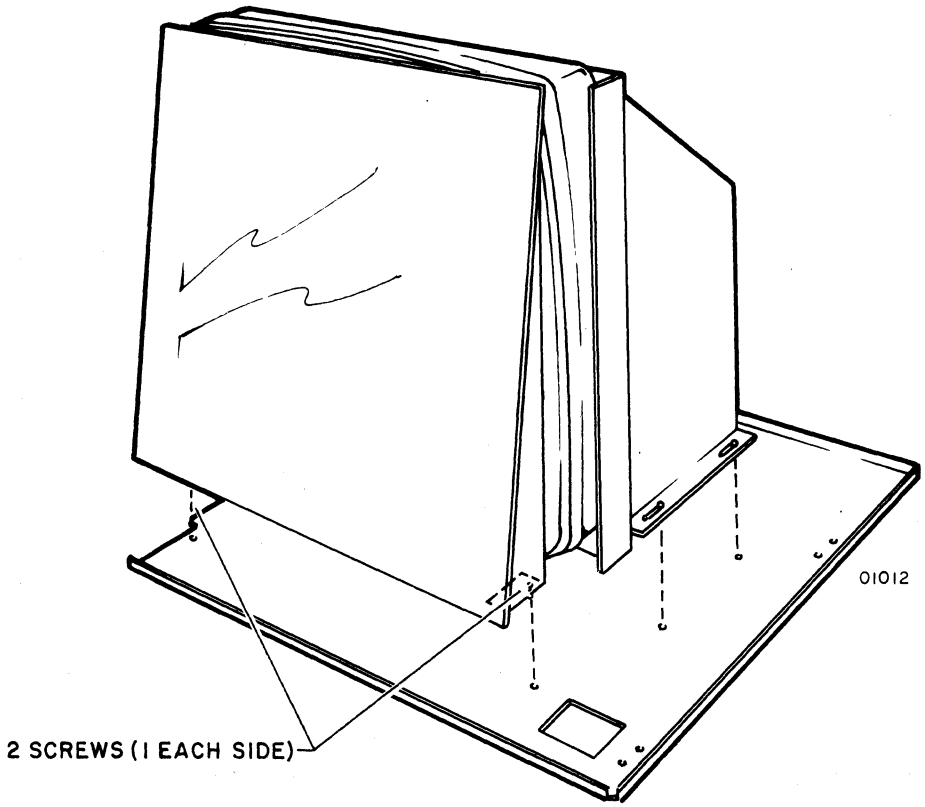

Figure 6-21. Display Faceplate Mounting

Power Cable Connections

Figure 6-22 shows the routing of the power cables from jacks J2, J3, J4, and J5 of the power supply to the logic module. Also indicated are the cables from J2 going to the TV module and J5 going to the keyboard. Connector J1 provides ac power input to the power supply. Figure 6-23 shows identifying views of the four modules in the display terminal and the power cable connections between these modules.

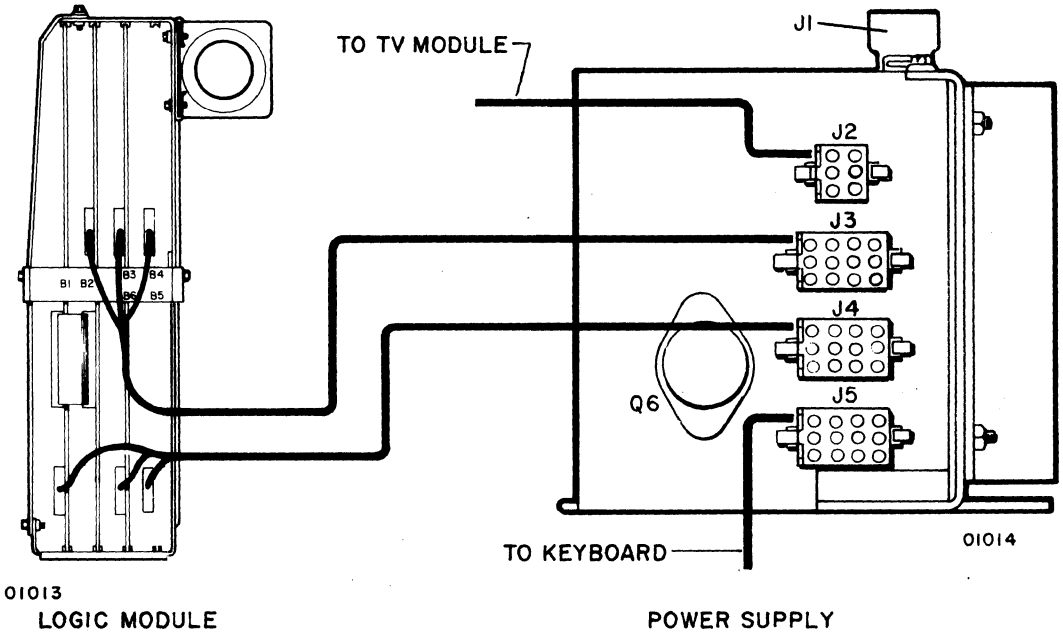

Figure 6-22. Power Supply-Logic Module Cabling

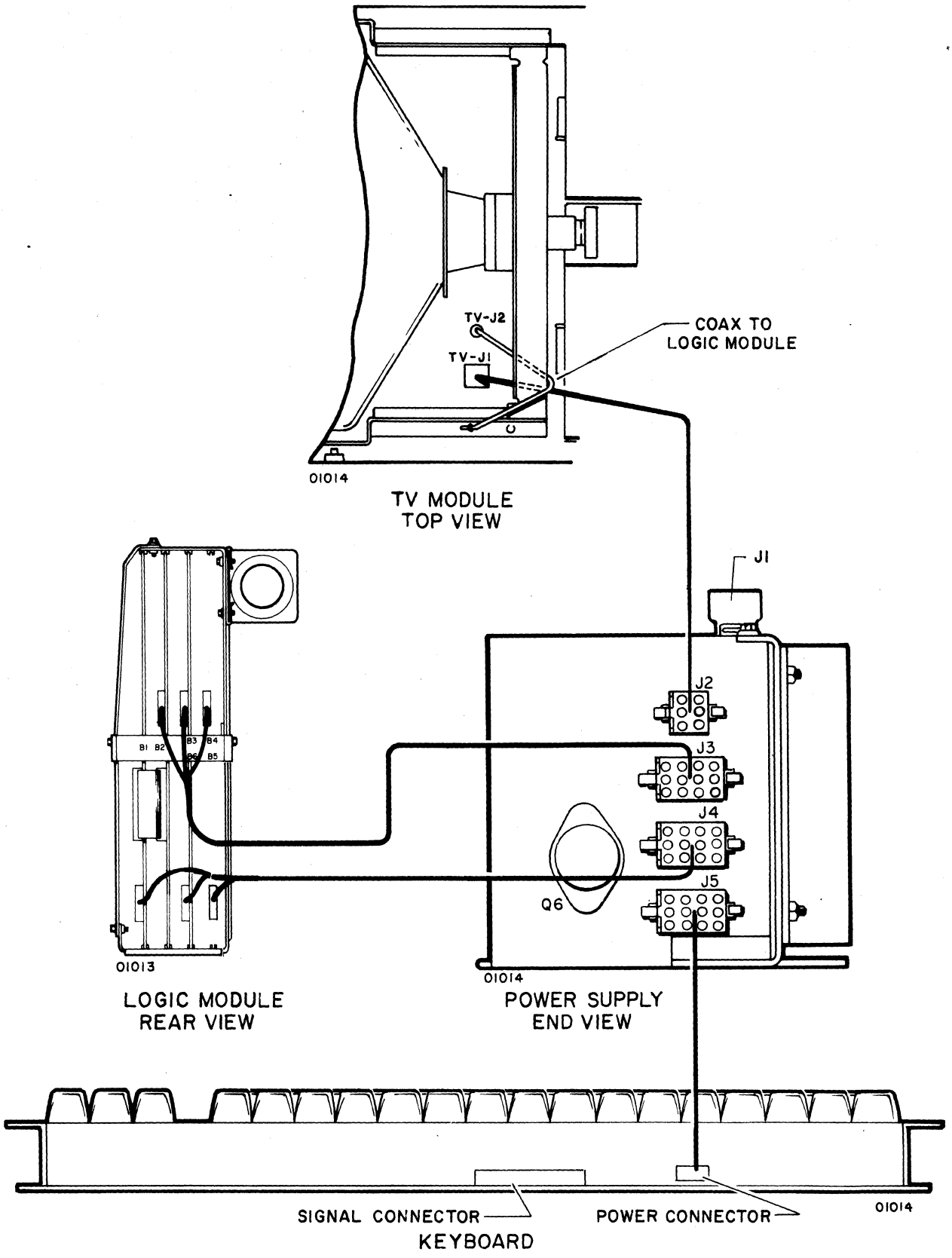

Figure 6-23. Power Cable Interconnections

Signal Cable Connections

Figure 6-24 shows the cabling for the four modules: logic, TV, power supply, and keyboard. The logic module is shown in an expanded form to better describe the routing of signals between the printed circuit cards. The card designations B1, B2, B3, B4, and B5 are related to the card positions marked on the back of the logic module. These markings are shown in figures 6-22 and 6-23. The connector positions shown in figure 6-24 are relative to those on the cards in the terminal.

Of primary importance in figure 6-24 is the intermodule connections. Cable routing between the logic module and the other modules can be determined by using the connector designations on the cards and the modules themselves.

Keyboard

The keyboard signal cable runs from the signal connector, see figure 6-22, to connector J4 on board B5 (interface card). The power cable runs from J5 on the power supply to the power connector on the keyboard.

TV Module

The TV module signal cable is a coax cable with a BNC connector on the TV module end. This cable runs from the BNC connector, J2, on the TV module to connector J4 on board B2 (basic control card). The power cable runs between J1 on the TV module and J2 on the power supply.

Interface

The interface cable runs between connector J2 on board B1 (interface card) and the connector panel at the rear of the terminal.

Miscellaneous Field Spare Parts

When removing or replacing field spare parts not described thus far, refer to the diagrams of Section 8, Parts Data, for parts location. Refer to Cabinet Hood, this section, for removal instructions to gain access to the inside of the display terminal. Always make certain display terminal ac power cord is removed from site power outlet before working inside unit.

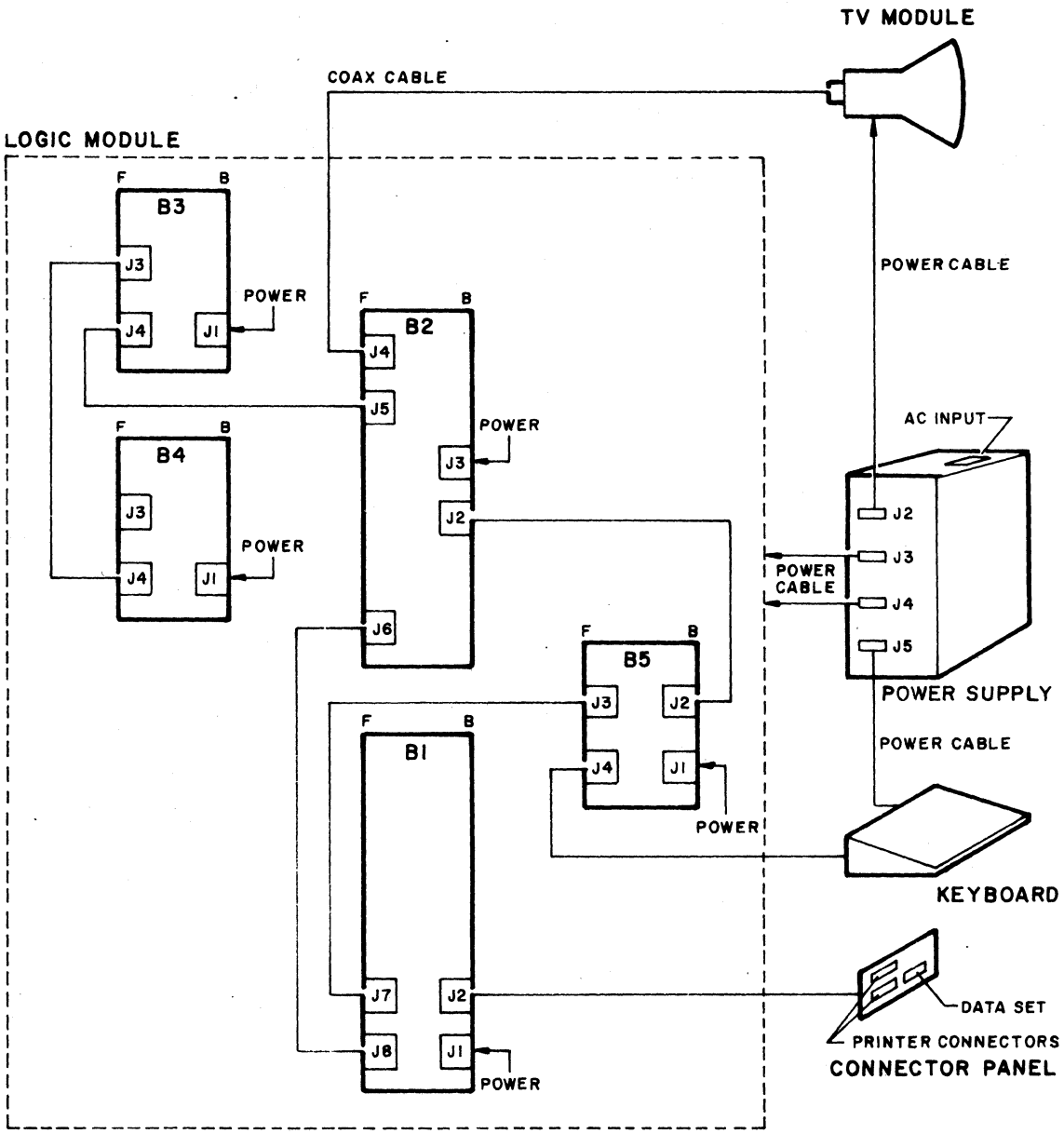

B1 - INTERFACE
B2 - BASIC CONTROL
B3 - BASIC MEMORY
B4 - EXPANDED MEMORY
B5 - INTERFACE

01016

Figure 6-24. Signal Cable Interconnections

SECTION 7

TROUBLESHOOTING

This section serves as a fault isolation guide for correcting a malfunctioning terminal located at a customer site.

TROUBLESHOOTING PHILOSOPHY

The on-site maintenance approach for this equipment is to logically isolate malfunctions to the replaceable module level and remove and replace the faulty module (see figure 7-1). This is done by observing terminal operation, noting any malfunctions, associating existing malfunctions to modular circuits, replacing the suspect modules, and then rechecking terminal operation. Section 8, Parts Data, of this manual contains the applicable on-site spare parts data for the terminal. Since modules in the terminal are quickly and easily replaceable, it is desirable to replace modules as part of a process of elimination in order to isolate a fault rather than attempt lengthy logical analysis of the problem to locate a malfunction. For this reason, this section does not contain lengthy step-by-step isolation procedures but rather serves as an outline of the approach to take for isolating faulty modules. An understanding of probable causes of faults is essential in order to logically isolate malfunctions to a particular module.

Before you perform fault isolation for the terminal, it is recommended that you read Section 1, General Description, to acquaint yourself with the function and purpose of the equipment and read Section 2, Operation, to become familiar with the operation of the modules and controls which comprise a terminal.

FAULT ISOLATION

Before isolating faults, master clear the terminal. Before replacing any suspect module, check power supply outputs and fuse and check the seating of all accessible plug-in subassemblies within the module (see Section 6, Maintenance). Also check interconnecting cables and connectors for visually apparent damage and see that they are firmly seated.

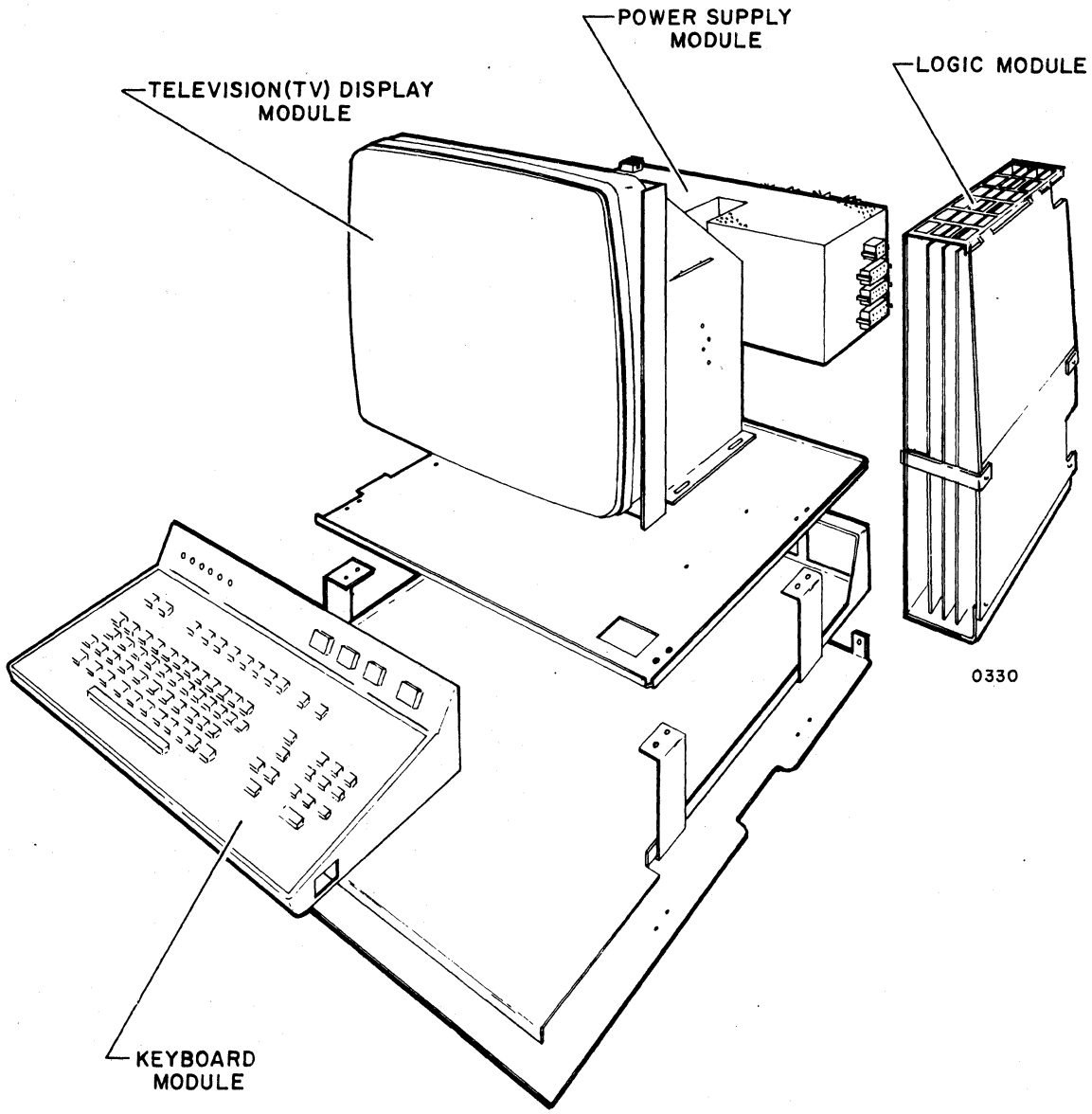

Figure 7-1. Display Terminal Modules

MASTER CLEAR

The master clear procedure allows resetting the logic circuits to an initial condition to eliminate any possible logic "hang up" which may be causing the difficulty. To master clear the terminal, use the following procedures:

1) Press POWER indicator/switch. POWER indicator will extinguish.
2) Wait 30 seconds.
3) Press POWER indicator/switch. POWER indicator will light.

Allow 30 seconds for terminal to stabilize. Try keyboard to determine if terminal fault has been corrected.

VOLTAGE ADJUSTMENT

If fault isolation requires removing the hood, a check of the voltages at the power supply should be made according to the procedures in Section 6, Maintenance.

MODULE REMOVAL AND REPLACEMENT PROCEDURES

The removal of the hood, TV display module, logic circuit module, keyboard, or the power supply should follow the procedures given in Section 6, Maintenance. These procedures should be followed when referenced in table 7-1.

FAULT ISOLATION PROCEDURES

Fault isolation can be approached systematically by first giving thought to the type of malfunction present.

- If the terminal screen and all the indicators are blank (off), then check the terminal for lack of power. See table 7-1.
- If the terminal has power but the keys or indicators do not operate properly, master clear the terminal.
- Can the fault be corrected without removing the hood?
- Can the fault be corrected by removing the hood and making adjustments?
- Can the fault be corrected by replacing a module?

The chart shown in table 7-1 provides a step-by-step procedure for isolating the fault preventing correct terminal operation.

TABLE 7-1. FAULT ISOLATION CHART

SYMPTOM	CHECK OR PERFORM IN SEQUENCE SHOWN
POWER indicator does not light, and cursor does not display.	a) Is site power available? b) Is terminal ac power cord plugged in? c) Is ac power cord seated properly at rear of terminal? d) Is circuit breaker, located at rear of display, set (pushed in)? e) Is ac power cord damaged? Wires broken? Replace if necessary. f) Remove hood — see Section 6, Maintenance. g) Replace POWER indicator/switch. * h) Replace circuit breaker. *
No cursor	a) Is POWER indicator illuminated? If not, press POWER switch; indicator should illuminate. b) Is raster visible when Brightness control is turned up? c) Is ac input power available? See a) through e) of preceding symptom. d) Remove hood — see Section 6, Maintenance. e) Are dc output power cables from power supply module connected on both ends? f) Is fuse F1 blown? (This can be determined by checking g for +5 volts. If no voltage, fuse is probably blown.) g) Replace logic module. h) Replace TV module. i) Replace power supply module.
No cursor and no symbol displays.	a) Is Brightness control turned down too far? b) Remove hood — see Section 6, Maintenance. c) Replace logic module. d) Replace TV module.
No symbol will display. Cursor is visible. Local or remote half duplex mode.	a) Is keyboard unlocked? b) Remove hood — see Section 6, Maintenance. c) Replace logic module. d) Replace keyboard module.
Keyboard does not unlock.	a) Master clear display by cycling power off and on with POWER indicator/switch. b) Remove hood — see Section 6, Maintenance. c) Replace keyboard. d) Replace Keylock switch.
No keyboard key works.	a) Is keyboard unlocked? b) Remove hood — see Section 6, Maintenance. c) Replace keyboard. d) Replace logic module.
Display is too bright or too dim.	a) Adjust Brightness control. b) Remove hood — see Section 6, Maintenance. c) Replace TV module.
One or both modem indicators do not light.	a) Check modem and telecommunications system. b) Remove hood — see Section 6, Maintenance. c) Replace indicator. *
PRINT key or PRINTER ON-LINE indicator/switch does not cause printout for a terminal with associated printer.	a) Is keyboard unlocked? b) Check if PRTR BUSY indicator is lit. c) Check printer power. d) Check printer interface connections. e) Check printer operation and replace if necessary. f) Remove hood — see Section 6, Maintenance. g) Replace logic module. h) Replace keyboard if PRINT key or replace indicator/switch if PRINTER ON-LINE switch. *

* The replacement of this part may require replacing the next higher order assembly depending on the spare parts available.

TABLE 7-1. FAULT ISOLATION CHART (CONT)

SYMPTOM	CHECK OR PERFORM IN SEQUENCE SHOWN
FULL DUPLEX on-line (LOCAL indicator/switch extinguished) operation in error. (Failure of echo-plex operation).	a) Check data set connection. b) Check BAUD RATE switch setting. c) Check data set. d) Check data set communications line connections. e) Check system operation. f) Remove hood — see Section 6, Maintenance. g) Replace logic module. h) Replace DUPLEX switch. * i) Replace LOCAL indicator/switch. *
Displayed messages from remote site contain parity error symbols.	a) Check PARITY switch setting. b) Check a) through g) of preceding symptom. c) Replace PARITY switch. *
Displayed messages from remote site with missing or scrambled symbols.	Replace PARITY switch. *
Note: The fault isolation steps which follow may be performed only with the hood of the terminal removed. All adjustments are on TV module; see Section 6, Maintenance.	
SCROLL DISABLE indicator/switch does not disable or enable scroll.	a) Replace logic module. b) Replace indicator/switch.
Display incorrectly positioned (too far left-right, or up-down).	a) Adjust raster centering tabs. b) Replace TV module.
Poor contrast	a) Adjust Contrast control. b) Replace TV module.
Display rolls vertically	a) Adjust Vertical Hold control. b) Is vertical blanking bar present (see figure 7-2)? If yes, replace TV module. If not, replace logic module.
Display tears horizontally	a) Adjust Horizontal Hold control. b) Replace TV module. c) Replace logic module.
Poor focus	a) Adjust Focus control. b) Replace TV module.
Display has insufficient height.	a) Adjust Vertical Size control. b) Replace TV mdoule.
Nonuniform height of all display lines.	a) Adjust Vertical Linearity control. b) Replace TV module.
Display has insufficient width.	Not an on-site adjustment. Replace module.
Nonuniform width of all symbol positions.	Not an on-site adjustment. Replace module.
Display is rotated clockwise or counter-clockwise from vertical position.	a) Adjust yoke. b) Replace TV module.
* The replacement of this part may require replacing the next higher order assembly depending on the spare parts available.	

CHARACTERISTICS

Vertical hold adjusted so bar is visible.

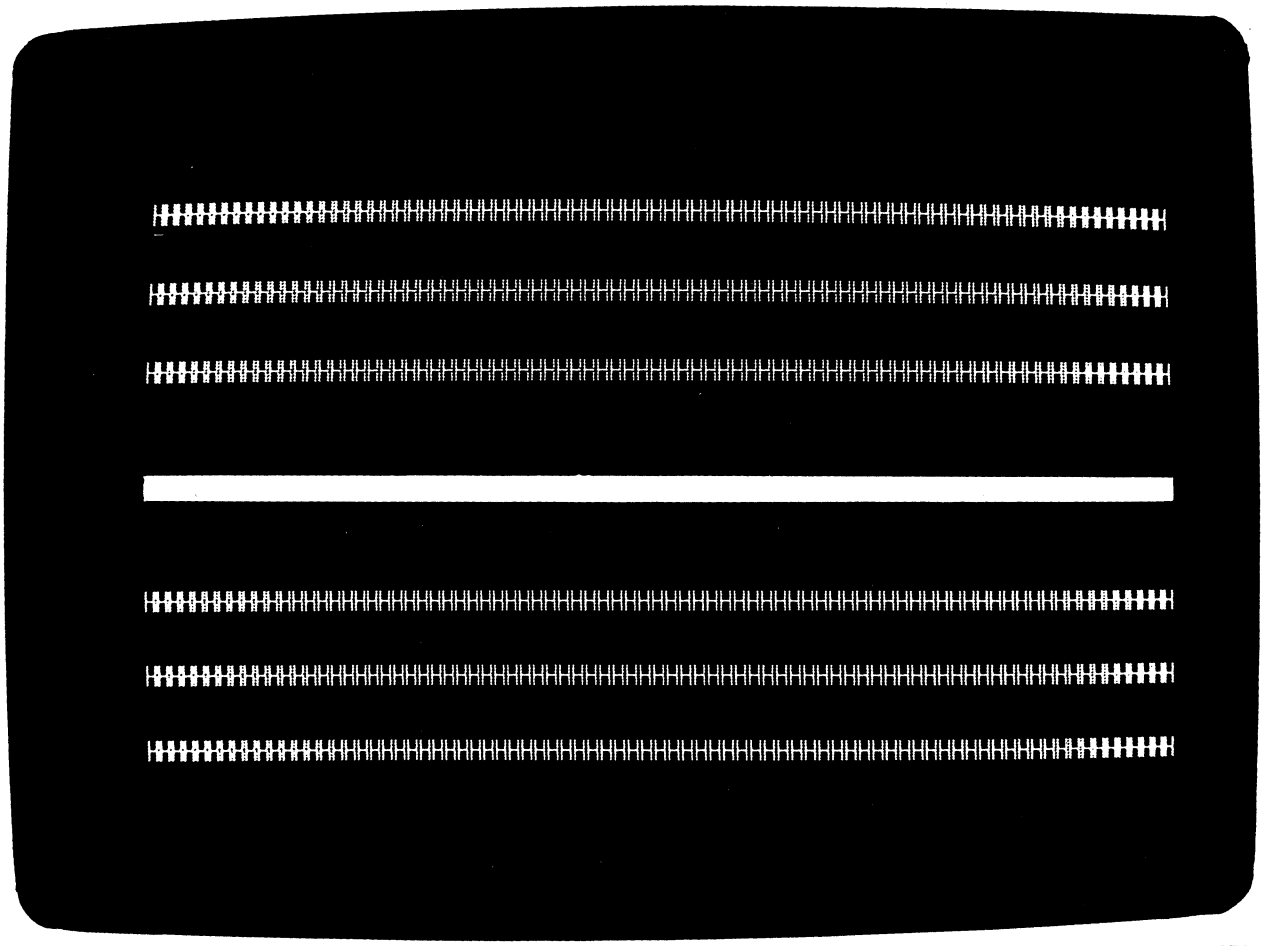

Figure 7-2. Vertical Blanking Bar

SECTION 8

PARTS DATA

This section provides identification of the components used in the display terminal. Table 8-1 explains the column headings in some of the parts lists.

TABLE 8-1. EXPLANATION OF DRAWING COLUMN HEADINGS

COLUMN HEADING	EXPLANATION
FIND NO.	Identifies an electrical or mechanical part on an assembly drawing. If more than one listing appears for a find number, refer to LI, WK IN, and WK OUT.
LI (Line Item)	Gives a chronological or historical record of the addition of a new part to a find number. For example, 01 indicates that the part was the first one used, and 02 indicates the second, etc. See also WK IN and WK OUT.
PART NUMBER	Gives the Control Data Corporation part identification. Use this number when ordering replacements.
CD (Check Digit)	Gives the information-control system a means of cross-checking the correctness of a part number.
QUANTITY	Lists the total number of a part required to complete an assembly. The vertical line near the center of the column acts as a decimal point. Numbers to the left of the line are whole numbers. Those to the right of the line are tenths, hundredths, and thousandths.
U/M (Unit of Measure)	Indicates how the information-control system counts or supplies a part.
PART DESCRIPTION	Describes the physical appearance, type, or name of a part.
MC (Material Control Code)	Supplies additional descriptive data to the information-control system.
YLD (Yield)	A 2-digit numeric number that indicates the usable portion of any quantity of parts expressed as a percentage.
ECO NO. IN	Engineering Change Order that adds a new part to an assembly. See also WK IN.
ECO NO. OUT	Engineering Change Order that deletes a part from an assembly. See also WK OUT.
S/N (Serial Number)	Used to specify an ECO's effectivity by serial number.
WK IN (Week In)	Lists the date when manufacturing begins using a new part and when it is available for parts replacement. For example, 7222 means a part is available as of the 22nd week of 1972.
WK OUT (Week Out)	Lists the date when manufacturing no longer uses a part in building an assembly. See also WK IN. Do not order a part after its week-out date.

0643

GENEALOGY CHARTS

The genealogy charts show the relationship between the assemblies and subassemblies within the terminal.

ASSEMBLIES

The assembly drawings and accompanying parts lists provide information for the display station assembly.

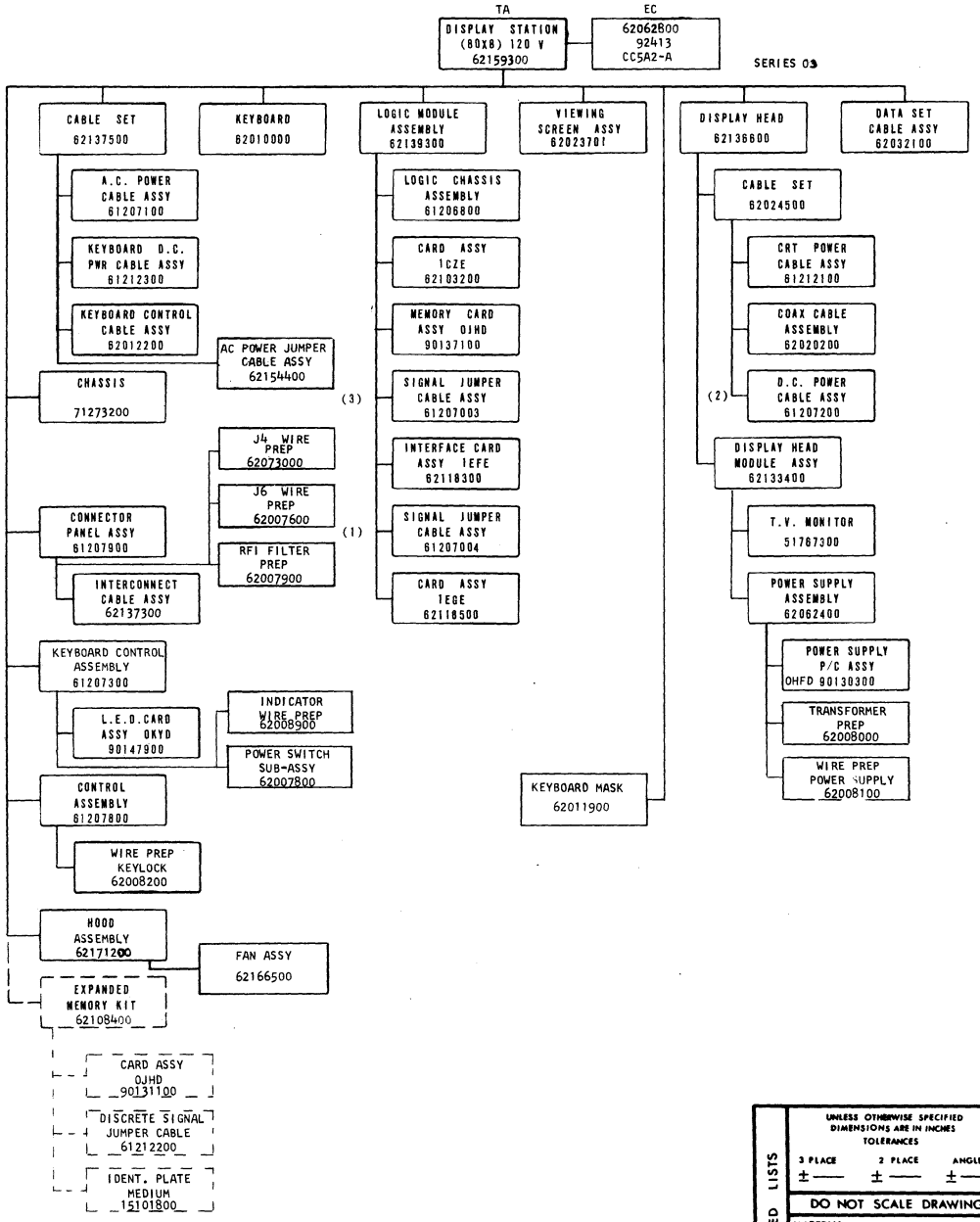

SHEET REVISION STATUS

REVISION RECORD						
REV	ECO	DESCRIPTION	DRFT	DATE	CHKD	APP
A	00086-16	RELEASE	—	1/26/72	—	K.T.
B	DT00591	UPDATE TO 01 SERIES	RQR	4/4/72	RE	
C	DT00592	02 SERIES CHG BY DT00428	RQR	4/6/72	RE	
D	DT573	REVISED PER ECO	DR 6/7/72	6/21/72		RJK
E	DT640	REVISED PER ECO	DAO	9/21/72		RJK

62048600

8-3/8-4

62107500

DETACHED LISTS

UNLESS OTHERWISE SPECIFIED DIMENSIONS ARE IN INCHES TOLERANCES
3 PLACE ± — 2 PLACE ± — ANGLES ± —
DO NOT SCALE DRAWING
MATERIAL
FINISH

CONTRO[illegible]

	FIRST USED ON	CC5A2-A	
DWN	D. Christensen		11-17-71
CHKD	[illegible]		1-18-72
ENGR	[illegible]		1-24-72
MFG	[illegible]		1/27/72
APPR	K. Eshelman		1/27/72

TITLE
GENEALOGY CHART

CODE IDENT 15920 | C | DRAWING NO 62107500

SCALE | SHEET / OF

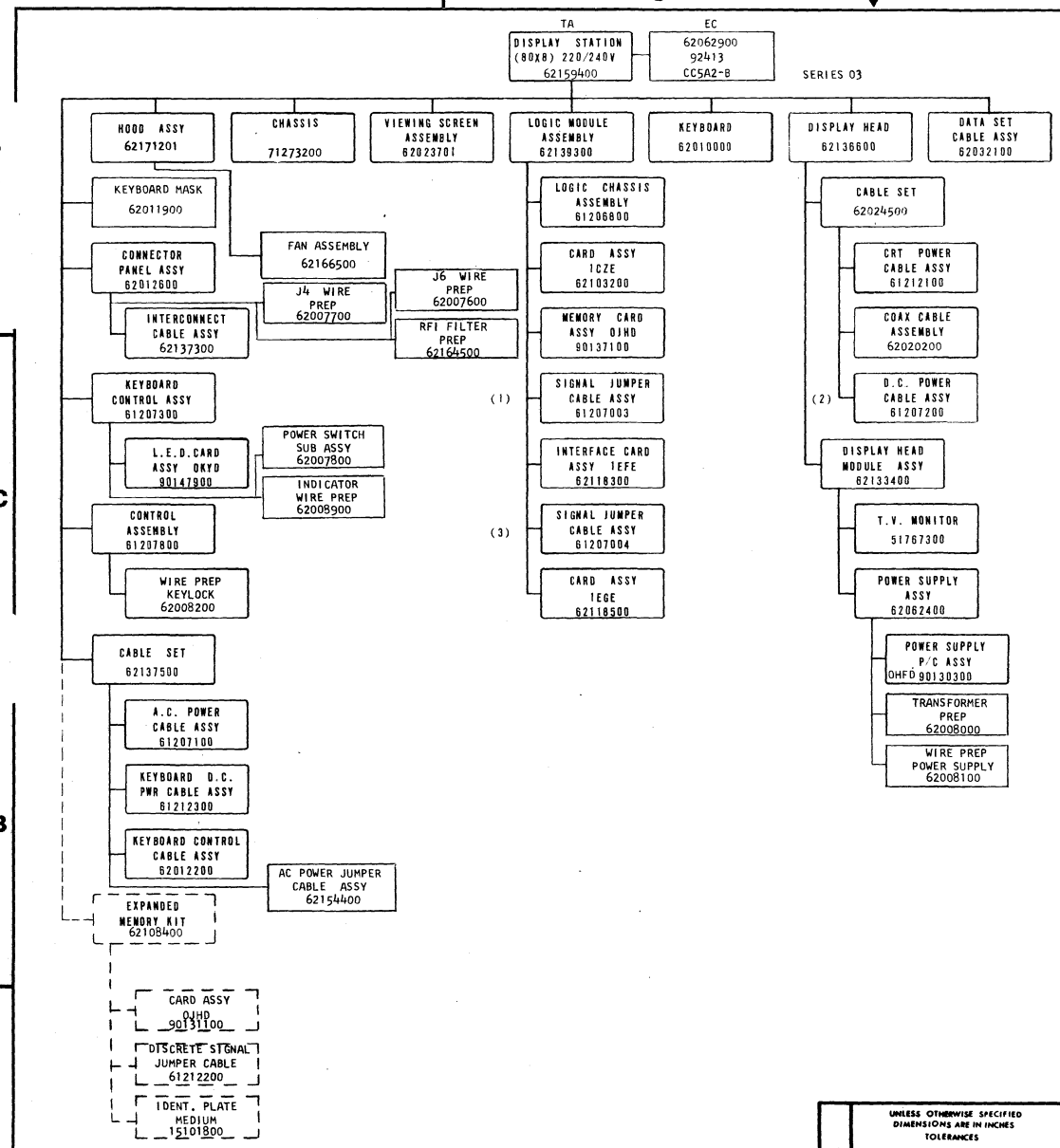

SHEET REVISION STATUS

REVISION RECORD						
REV	ECO	DESCRIPTION	DRFT	DATE	CHKD	APP
A	[illegible]	RELEASE	—	[illegible]		
B	DT00591	UPDATE TO 01 SERIES	RQR	4/4/72	RE	
C	DT00592	02 SERIES CHG BY DT00428	RQR	4/6/72	RE	
D	DT573	REVISED PER ECO	RQR	6/6/72	RE	
E	DT640	REVISED PER ECO	DAO	9/12/72	RE	

62048600

62107600

8-5

UNLESS OTHERWISE SPECIFIED DIMENSIONS ARE IN INCHES
TOLERANCES
3 PLACE ± —— 2 PLACE ± —— ANGLES ± ——
DO NOT SCALE DRAWING
MATERIAL
FINISH
DETACHED LISTS

CONTROL DATA

FIRST USED ON	CC5A2-B	
DWN	D.Christensen	12-17-71
CHKD	B.A.Ross	1-18-72
ENGR	[illegible]	[illegible]
MFG	[illegible]	[illegible]
APPR	K. Eshelman	1/27/72

TITLE
GENEALOGY CHART

CODE IDENT 15920 | C | DRAWING NO 62107600

SCALE | SHEET OF

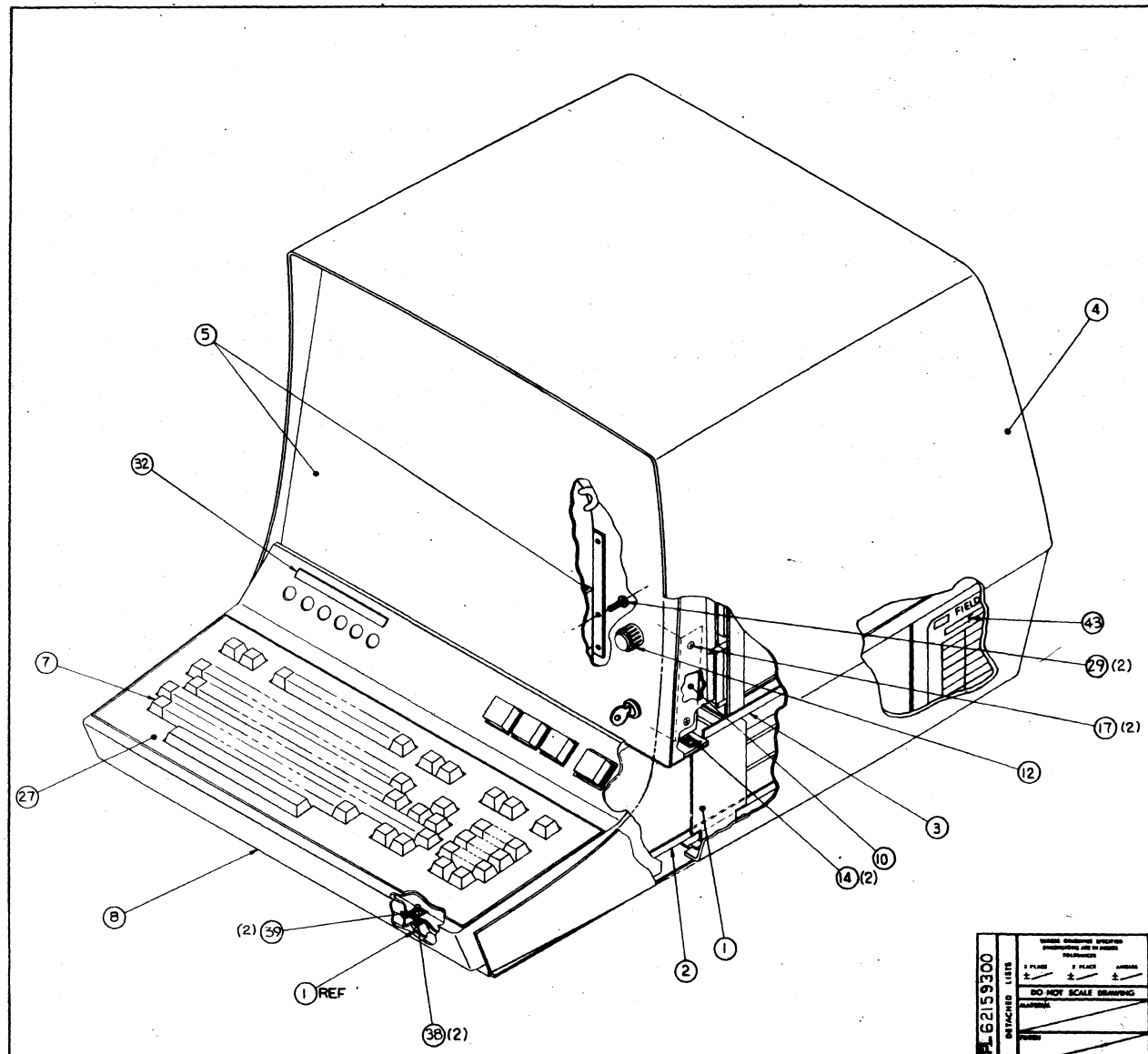

SHEET REVISION STATUS					REVISION RECORD						
4	3	2	1	REV	ECO	DESCRIPTION	SHEET	DATE	CHKD	APP
A	A	A	A	A	000898	RELEASE	—	4-28	—	
A	A	B	B	B	DT428	REVISED PER ECO				
C	A	C	C	C	DT573	REVISED PER ECO				
C	A	C	D	D	DT550	REVISED PER ECO				
C	A	C	E	E	DT616	CHG APL ONLY				
C	A	C	F	F	DT640	CHG APL ONLY				
C	A	G	G	G	DT903	REVISED PER ECO				
C	H	H	H	H	DT999	REVISED SHTS 1,2,3				

NOTE:

1. CABLE CONNECTION TABLE: CROSS HATCHED BLOCKS HAVE BEEN CONNECTED AT A LOWER ASSEMBLY.
2. GROUND WIRE FROM CONTROL ASSEMBLY (61207800).
3. FIND NO. 16 (CONNECTOR PIN HOUSING) TO BE PLUGGED INTO P2 OF CABLE FIND NO.6 FOR A PROTECTIVE COVER.

APL 62159300 DETACHED LISTS

DO NOT SCALE DRAWING

CC5A2-A

TITLE: DISPLAY STATION (80X8) 120 VOLT

CODE IDENT 15920 | SIZE D | DRAWING NO 62159300

SCALE 1/2

REVISION RECORD						
REV	ECO	DESCRIPTION	DRFT	DATE	CHKD	APP

DETAIL A
SCALE: 1/1

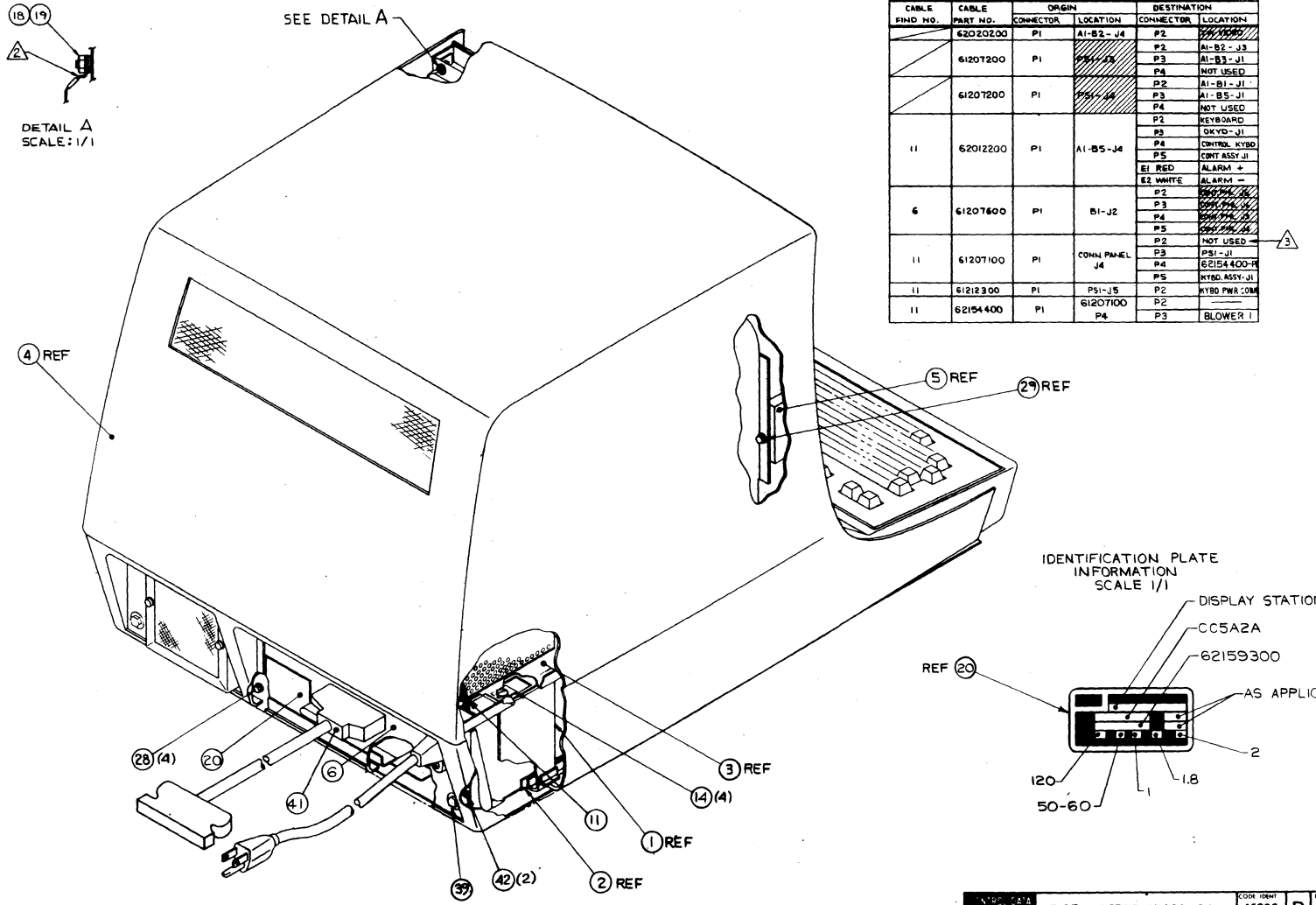

CABLE CONNECTION TABLE ⚠

CABLE FIND NO.	CABLE PART NO.	ORGIN CONNECTOR	ORGIN LOCATION	DESTINATION CONNECTOR	DESTINATION LOCATION
	62020200	P1	A1-B2-J4	P2	[illegible]
	61207200	P1	PSI-J3	P2	A1-B2-J3
				P3	A1-B3-J1
				P4	NOT USED
	61207200	P1	PSI-J4	P2	A1-B1-J1
				P3	A1-B5-J1
				P4	NOT USED
11	62012200	P1	A1-B5-J4	P2	KEYBOARD
				P3	OKYD-J1
				P4	CONTROL KYBD
				P5	CONT ASSY J1
				E1 RED	ALARM +
				E2 WHITE	ALARM −
6	61207600	P1	B1-J2	P2	[illegible]
				P3	[illegible]
				P4	[illegible]
				P5	[illegible]
11	61207100	P1	CONN. PANEL J4	P2	NOT USED ← 3
				P3	PSI-J1
				P4	62154400-P1
				P5	KYBD. ASSY-J1
11	61212300	P1	PSI-J5	P2	KYBD PWR COM
11	62154400	P1	61207100 P4	P2	——
				P3	BLOWER 1

IDENTIFICATION PLATE INFORMATION
SCALE 1/1

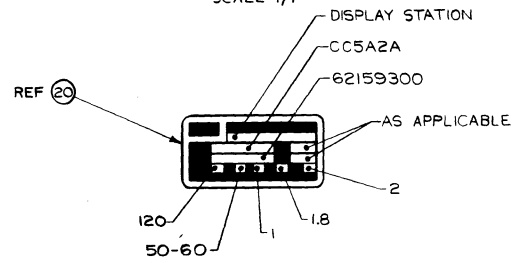

INTRO DATA	DISPLAY STATION (80X8) 120 VOLTS	CODE IDENT 15920	D	DWG NO 62159300 REV H
				SHEET 2

REVISION RECORD

REV	ECO	DESCRIPTION	DRFT	DATE	CHKD	APP

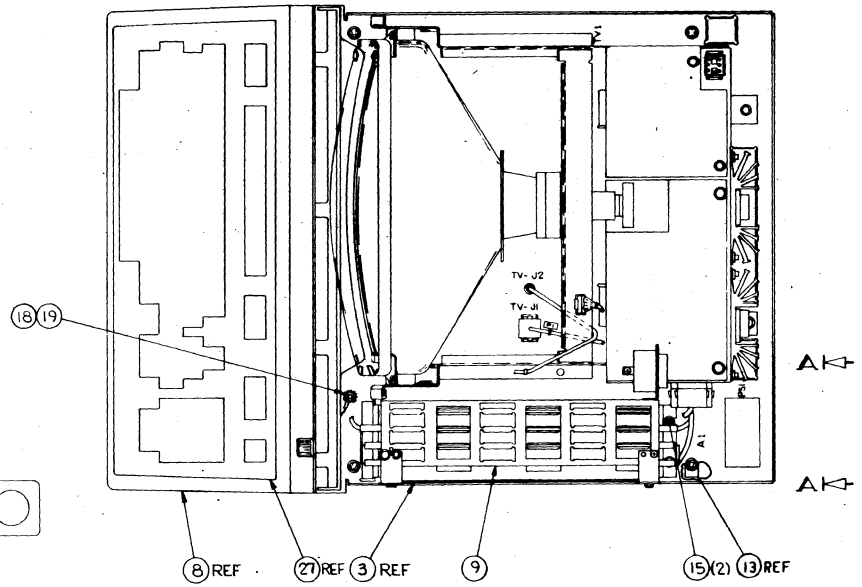

TOP VIEW
HOOD (ITEM 4) REMOVED FOR CLARITY

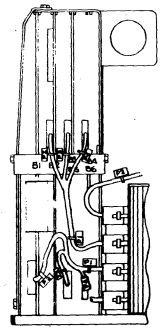

VIEW A-A
ROTATED 90° CW

DISPLAY STATION (8018) 120 VOLTS	CODE IDENT 15920	D	DWG NO 62159300	REV H
			SHEET 3	

6204600

8-9/8-10

REVISION RECORD						
REV	ECO	DESCRIPTION	DRFT	DATE	CHKD	APP

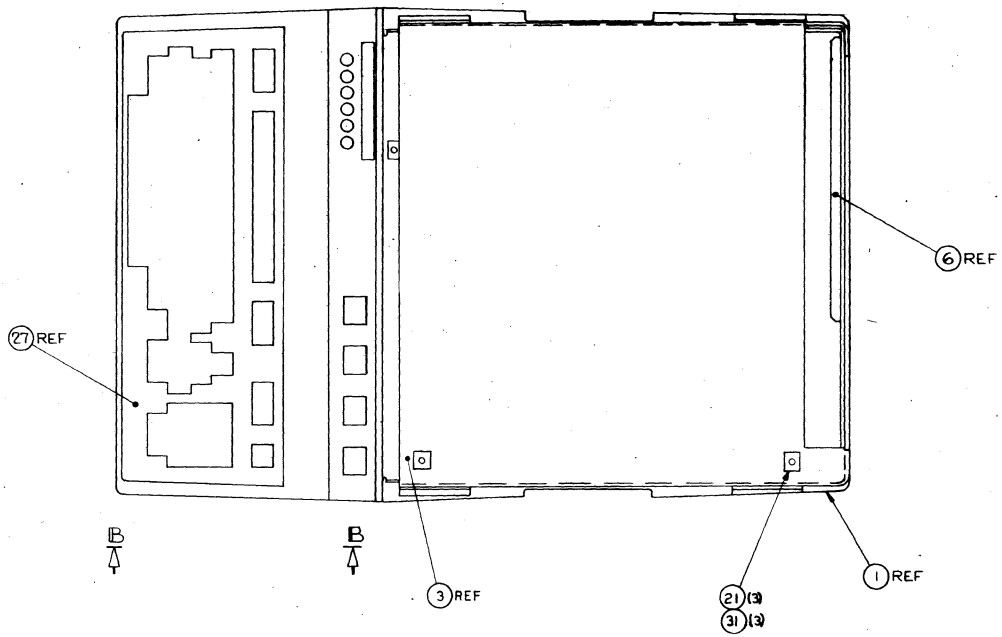

TOP VIEW
ITEMS 3 & 4 REMOVED FOR CLARITY

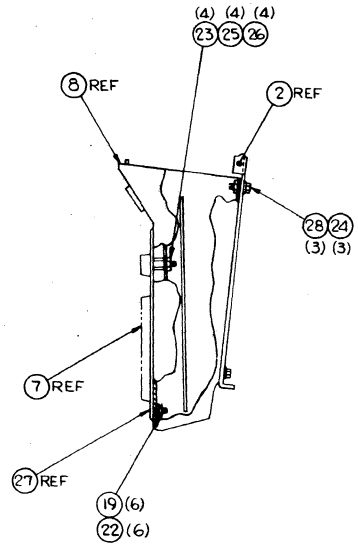

VIEW B-B
(ROTATED 90° CCW)

DISPLAY STATION (80×8) 120 VOLTS	CODE IDENT 15920	D	DWG NO 62159300	REV C
			SHEET 4	

CONTROL DATA

ASSEMBLY PARTS LIST

PRINT DATE	PAGE	FILE CHANGE NO.
12-07-72	1	00000999

DIV.	ASSEMBLY NUMBER	CD	REV.	DWG.	DESCRIPTION	MC	STATUS	STATUS DATE	ENG. RESP.	FILE DATE
0480	62159300	3	H		DISPLAY STATION	N	REL	03-28-72		12-07-72

T	FIND NO	LI	PART NUMBER	CD	M	QUANTITY	U/M	PART DESCRIPTION	MC	YLD	ECO. NO. IN	ECO. NO. OUT	S/N	WK IN	WK OUT
	001	01	71273300	5		1	PC	BASE, TERMINAL	P						
	002	01	62100100	7		1	PC	CHASSIS ASSY	N			DT00428			7213
	002	02	62100101	5		1	PC	CHASSIS ASSY	N		DT00428	DT00573		7213	7223
	002	03	71273200	7		1	PC	CHASSIS, BASE CONTROLLER	P		DT00573	62003802		7223	7228
	002	04	71273200	7		REF	PC	CHASSIS, BASE CONTROLLER	P		62003802			7228	
	003	01	62136600	4		1	PC	DISPLAY HEAD	N						
	004	01	62023600	0		1	PC	HOOD ASSEMBLY 12 V	N			DT00428			7213
	004	02	62023604	2		1	PC	HOOD ASSY	N		DT00428	DT00573		7213	7223
	004	04	62157000	1		1	PC	HOOD ASSY	N		DT00573	DT00640		7223	7232
	004	05	62171200	9		1	PC	HOOD ASSY GOLD 12-V	N		DT00640			7232	
	005	01	62023701	6		1	PC	PANEL ASSY VIEWING	N			DT00903			7239
	005	02	62023700	8		1	PC	PANEL ASSEMBLY VIEWING	N		DT00903			7239	
	006	01	61207900	4		1	PC	CONNECTOR PANEL ASSY, 12-V	N			62003802			7228
	006	02	61207900	4		REF	PC	CONNECTOR PANEL ASSY, 12-V	N		62003802			7228	
	007	01	62010000	8		1	PC	KEYBOARD	P			62003802			7228
	007	02	62010000	8		REF	PC	KEYBOARD	P		62003802			7228	
	008	01	61207300	7		1	PC	CONTROL ASSY - 713 DISPLAY	N			62003802			7228
	008	02	61207300	7		REF	PC	CONTROL ASSY - 713 DISPLAY	N		62003802			7228	
	009	01	62139300	8		1	PC	LOGIC MODULE ASSY	N						
	010	01	61207800	6		1	PC	CONTROL ASSY CRT KEYLOCK	N			62003802			7228
	010	02	61207800	6		REF	PC	CONTROL ASSY CRT/KEYLOCK	N		62003802	DT00999		7228	7249
	010	03	61207800	6		1	PC	CONTROL ASSY CRT/KEYLOCK	N		DT00999			7249	
	011	01	62137500	5		1	PC	CABLE SET	P						
	012	01	51534900	9		1	PC	KNOB, BUCKEYE N	P			DT00550			7231
	012	02	51860000	2		1	PC	KNOB PLAIN	P		DT00550			7231	
	013	01	51781500	7		4	PC	RECEPTACLE-CLIP ON	P			DT00999			7249
	014	01	00860325	0		4	PC	SCREW SELF LOCKING 10-32X1/2	B			DT00428			7213

CONTROL DATA

ASSEMBLY PARTS LIST

PRINT DATE	PAGE	FILE CHANGE NO.
12-07-72	2	00000999

DIV.	ASSEMBLY NUMBER	CD	REV.	DWG.	DESCRIPTION	MC	STATUS	STATUS DATE	ENG. RESP.	FILE DATE
0480	62159300	3	H		DISPLAY STATION	N	REL	03-28-72		12-07-72

T	FIND NO	LI	PART NUMBER	CD	M	QUANTITY	U/M	PART DESCRIPTION	MC	YLD	ECO. NO. IN	ECO. NO. OUT	S/N	WK IN	WK OUT
	014	02	00860325	0		2	PC	SCREW SELF LOCKING 10-32X1/2	B		DT00428	DT00999		7213	7249
	014	03	00860324	3		6	PC	SCREW SELF LOCKING 10-32X3/8	B		DT00999			7249	
	015	01	62022300	8		4	PC	SCREW-SELF LOCKING 10-32X1/4	B			DT00999			7249
	015	02	62022300	8		2	PC	SCREW-SELF LOCKING 10-32X1/4	B		DT00999			7249	
	016	01	93948005	9		1	PC	CONNECTOR 6 PIN HOUSING	P						
	017	01	10125715	2		2	PC	SCREW MACH FLT HD 6-32X1/2	B						
	018	01	10122904	5		2	PC	NUT TWIN SELF LOCKING 10-32	B			2003802			7229
	018	02	10122904	5		REF	PC	NUT TWIN SELF LOCKING 10-32	B		62003802			7229	
	019	01	10126403	4		8	PC	LOCK WASHER EXT #10	B			62003802			7229
	019	02	10126403	4		REF	PC	LOCK WASHER EXT #10	B		62003802			7229	
	020	01	15001200	2		1	PC	ID CABINET	P			DT00903			7239
	020	02	62158600	7		1	PC	ID PLATE EQUIPMENT MEDIUM	P		DT00903			7239	
	021	01	62050200	5		5	PC	CABLE CLAMP	B			62003802			7246
	021	02	62050200	5		REF	PC	CABLE CLAMP	B		62003802	DT00999		7246	7249
	021	03	62050200	5		REF 3	PC	CABLE CLAMP	B		62003802			7249	
	022	01	00860109	8		6	PC	NUT LOCK #10-32	B			62003802			7229
	022	02	00860109	8		REF	PC	NUT LOCK #10-32	B		62003802			7229	
	023	01	00860101	5		4	PC	NUT SELF-LOCKING,PLATE 6-32	B			62003802			7229
	023	02	00860101	5		REF	PC	NUT SELF-LOCKING,PLATE 6-32	B		62003802			7229	
	024	01	00838206	1		3	PC	NUT U TYPE 6-32	B			62003802			7229
	024	02	00838206	1		REF	PC	NUT U TYPE 6-32	B		62003802			7229	
	025	01	62051918	1		4	PC	STANDOFF - HEX	P			62003802			7228
	025	02	62051918	1		REF	PC	STANDOFF - HEX	P		62003802			7228	
	026	01	10126401	8		4	PC	WASHER EXT TOOTH LOCK NO.6	B						
	027	01	62011900	8		1	PC	MASK KEYBARD	P			62003802			7228
	027	02	62011900	8		REF	PC	MASK KEYBARD	P		62003802			7228	
	028	01	00860303	7		7	PC	SCREW-SELF LOCKING 6-32X3/8	B						

CONTROL DATA

ASSEMBLY PARTS LIST

PRINT DATE	PAGE	FILE CHANGE NO.
12-07-72	3	00000999

DIV.	ASSEMBLY NUMBER	CD	REV.	DWG.	DESCRIPTION	MC	STATUS	STATUS DATE	ENG. RESP.	FILE DATE
0480	62159300	3	H		DISPLAY STATION	N	REL	03-28-72		12-07-72

T	FIND NO	LI	PART NUMBER	CD	M	QUANTITY	U/M	PART DESCRIPTION	MC	YLD	ECO. NO. IN	ECO. NO. OUT	S/N	WK IN	WK OUT
	029	01	00860308	6		2	PC	SCREW SELF LOCKING 6-32X1	B						
	030	01	62032100	0		1	PC	DATA SET CABLE, EXTERNAL ASSY	A			DT00903			7239
	031	01	94277400	1		5	PC	CABLE TIE STRAP 1/16-5/8 DIA.	B			62003802			7229
	031	02	94277400	1		REF	PC	CABLE TIE STRAP 1/16-5/8 DIA.	B		62003802	DT00999		7229	7249
	031	03	94277400	1		REF 3	PC	CABLE TIE STRAP 1/16-5/8 DIA.	B		62003802			7249	
	032	01	62019500	8		1	PC	DECAL ADHESIVE BACKED	P			62003802			7228
	032	02	62019500	8		REF	PC	DECAL ADHESIVE BACKED	P		62003802			7228	
	033	01	00838200	4		4	PC	NUT, [illegible] TYPE 6/32	B						
	034	01	62122100	1		REF	PC	SPARE PARTS KIT NO 1	D						
	035	01	62132200	7		REF	PC	SPARE PARTS KIT NO 2	D						
	036	01	62119600	5		REF	PC	WIRING DIAGRAM POWER DIST	D						
	037	01	62107500	1		REF	PC	GENEOLOGY CHART	D						
	038	01	00860326	8		2	PC	SCREW [illegible]-32X5/8	B		DT00428			7213	
	039	01	51732900	9		2	PC	NUT SHEET SPRNG	B		DT00573			7223	
	040	01	59109100	4		REF	PC	PACKAGING INSTRUCTION	D		DT00573			7223	
	041	01	62032101	8		1	PC	DATA SET CABLE, EXTERNAL ASSY	A		DT00550			7231	
	042	01	51772102	3		2	PC	NUT RET INER	B		DT00616			7228	
	043	01	10124202	2		1	PC	F.C.O. LOG	B		DT00903			7239	
	999	01	62003802	6		1	PC	PHONY CHASSIS ASSY CC5A[illegible]A	N		REF			7228	
								0073 TOTAL LINES							

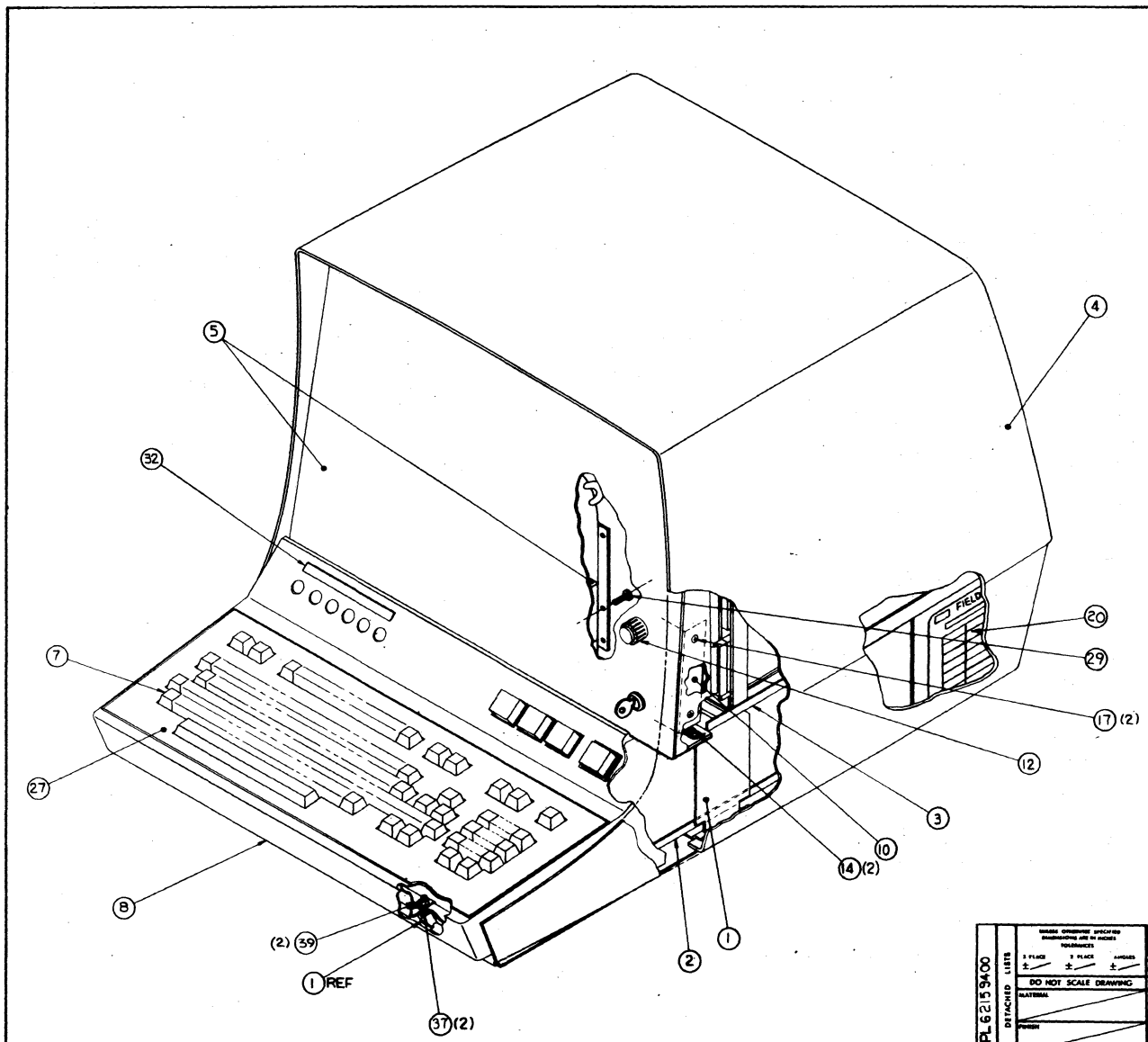

SHEET REVISION STATUS					REVISION RECORD						
4	3	2	1	REV	ECO	DESCRIPTION	DRFT	DATE	CHKD	APP
A	A	A	A	A	00088-16	RELEASE	–	1-28-72		
A	A	B	B	B	DT 428	REVISED PER ECO	[illegible]	5/22/72		
C	A	C	C	C	DT 573	REVISED PER ECO	[illegible]	7/6/72		
C	A	C	D	D	DT 550	REVISED PER ECO	[illegible]	7/21/72		
C	A	C	E	E	DT 616	CHG APL ONLY	DAO	9/5/72		
C	A	C	F	F	DT 640	CHG APL ONLY	DAO	9/20/72		
G	G	G	G	G	DT 903	REVISED PER ECO	[illegible]	9/[illegible]/72		
G	H	H	H	H	DT 999	REVISED SHTS 1,2,3		1/[illegible]/73		

NOTE:

1. CABLE CONNECTION TABLE: CROSS HATCHED BLOCKS HAVE BEEN CONNECTED AT A LOWER ASSEMBLY.
2. GROUND WIRE FROM CONTROL ASSEMBLY (61207800).
3. FIND NO. 16 (CONNECTOR PIN HOUSING) TO BE PLUGGED INTO P2 OF CABLE FIND NO.6 FOR A PROTECTIVE COVER.

APL-62159400

DETACHED LISTS

UNLESS OTHERWISE SPECIFIED DIMENSIONING ARE IN INCHES. TOLERANCES: X PLACE ±, X PLACE ±, ANGLES ±

DO NOT SCALE DRAWING

MATERIAL

FINISH

CONTROL DATA

FIRST USED ON: CC5A2-B

DWN [illegible] 5/16/72

CHKD [illegible] 5/16/72

ENGR

MFG

APPR

TITLE: DISPLAY STATION (80X8) 208/230 /

CODE IDENT 15920 | D | DRAWING NO 62159400

SCALE 1/2 | NMAEC 62092900 | SHEET 1 OF 4

REVISION RECORD						
REV	ECO	DESCRIPTION	DRFT	DATE	CHKD	APP

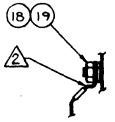

DETAIL A
SCALE: 1/1

SEE DETAIL A

CABLE CONNECTION TABLE ⚠

CABLE FIND NO.	CABLE PART NO.	ORIGIN CONNECTOR	ORIGIN LOCATION	DESTINATION CONNECTOR	DESTINATION LOCATION
		P1	A1-B2-J4	P2	[illegible]
	61207200	P1	[illegible]	P3	A1-B2-J3
				P3	A1-B3-J1
				P4	NOT USED
	61207200	P1	[illegible]	P2	A1-B1-J1
				P3	A1-B5-J1
				P4	NOT USED
11	62012200	P1	A1-B5-J4	P2	KEYBOARD
				P3	GKYD-J1
				P4	CONTROL KYBD
				P5	CONT ASSY J1
				E1 RED	ALARM +
				E2 WHITE	ALARM −
6	61207600	P1	A1-B1-J2	P2	[illegible]
				P3	[illegible]
				P4	[illegible]
				P5	[illegible]
11	61207100	P1	CONN PANEL J4	P2	NOT USED ◁3
				P3	P51-J1
				P4	62154400-P1
				P5	KYBD. ASSY-J1
11	61212300	P1	P51-J5	P2	[illegible] PWR CONN
11	62154400	P1	61207100 P4	P2 P3	—— BLOWER

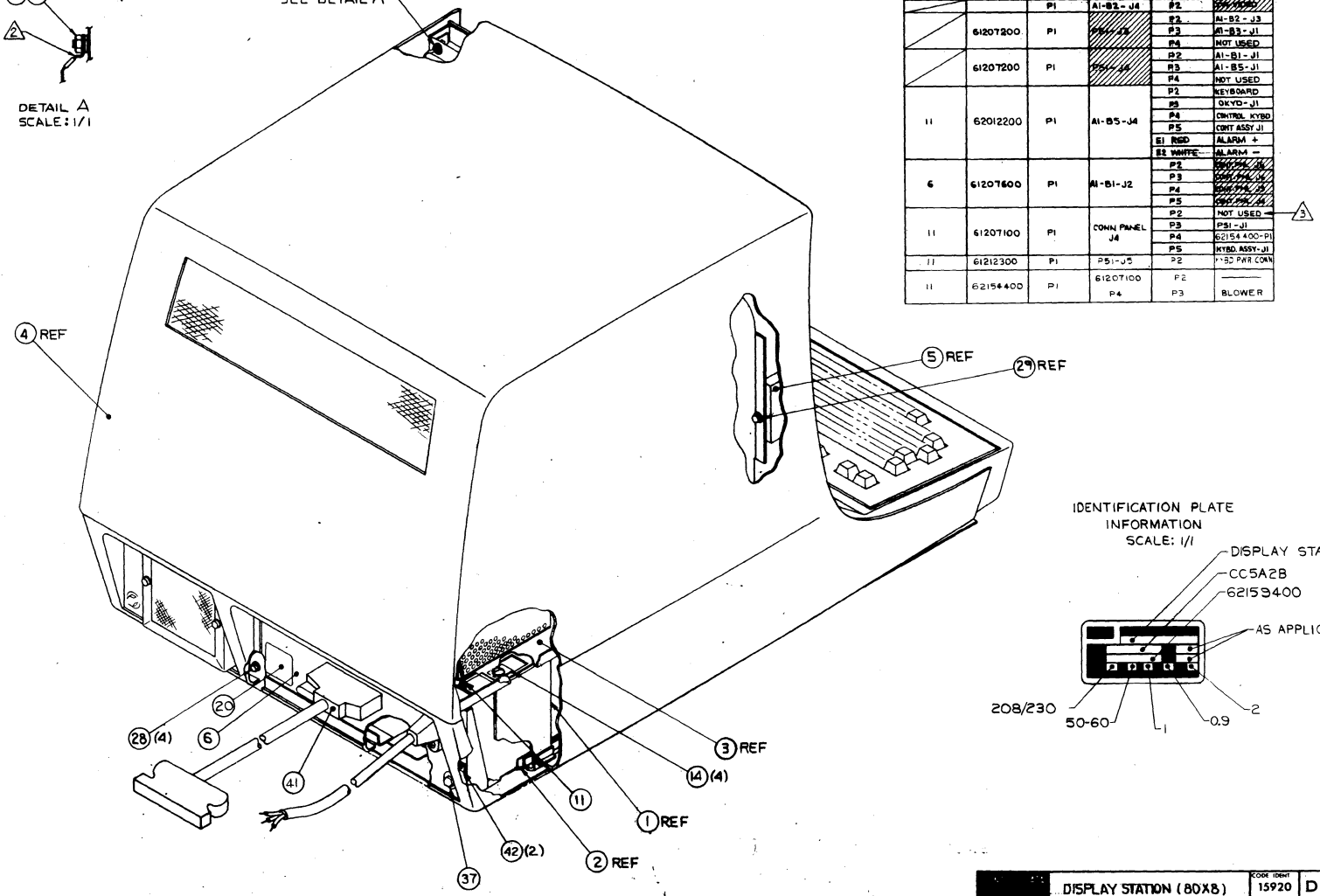

IDENTIFICATION PLATE INFORMATION
SCALE: 1/1

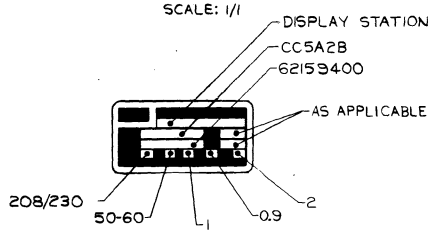

DISPLAY STATION (80X8) 208/230 V	CODE IDENT 15920	D	DWG NO 62159400	REV J
			SHEET 2	

REVISION RECORD						
REV	ECO	DESCRIPTION	DRFT	DATE	CHKD	APP

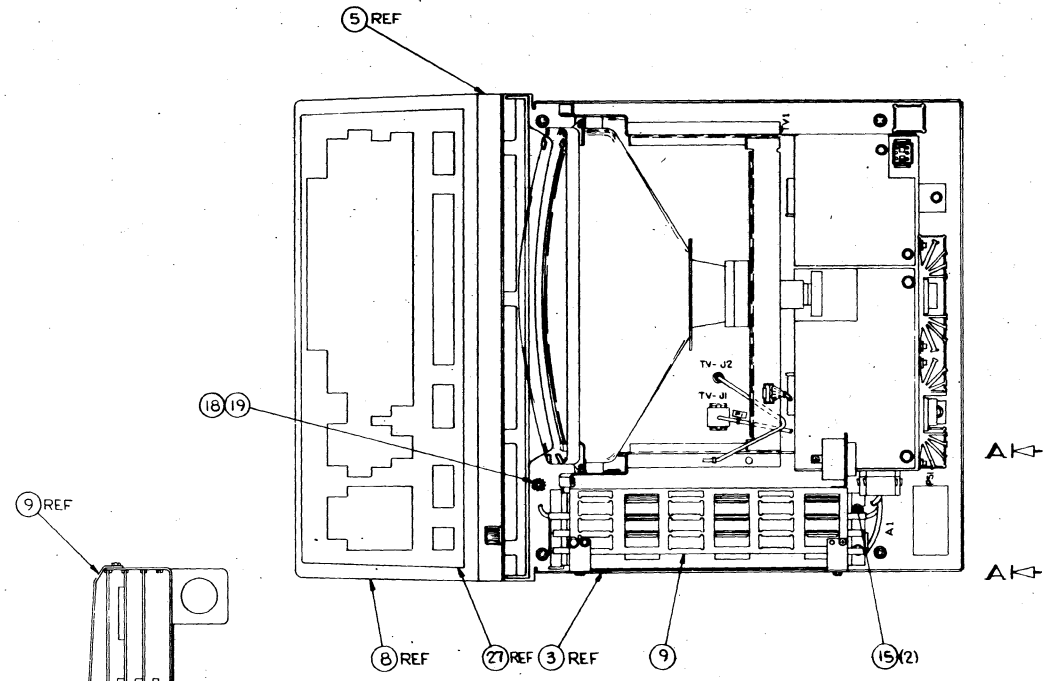

TOP VIEW
HOOD (ITEM 4) REMOVED FOR CLARITY

DISPLAY STATION (80×8) 208/230 V	CODE IDENT 15920	D	DWG NO 62159400	REV 4
			SHEET 3	

62048600

8-17/8-18

REVISION RECORD						
REV	ECO	DESCRIPTION	DRFT	DATE	CHKD	APP

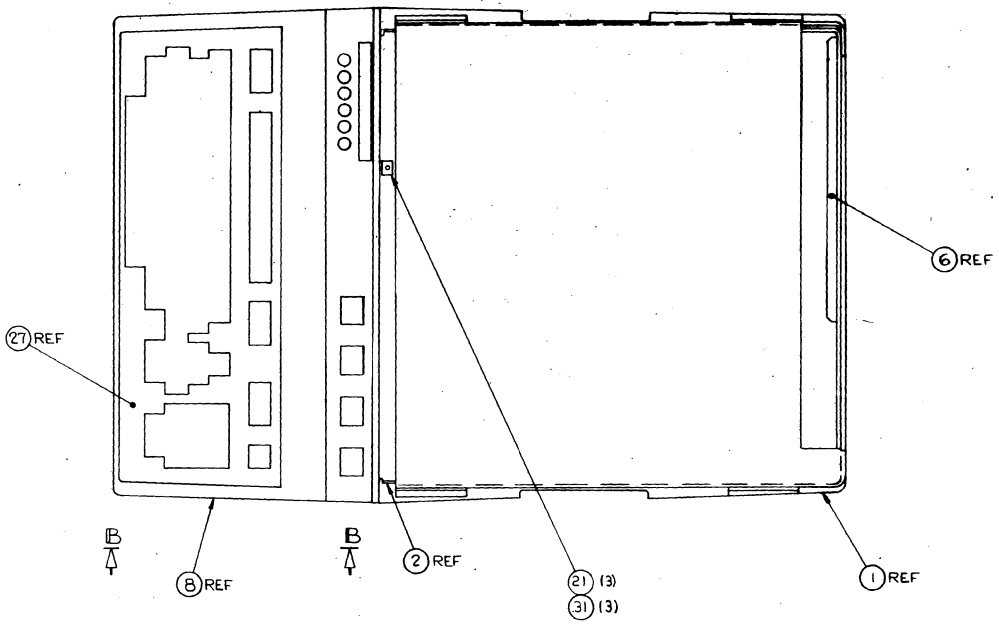

TOP VIEW
ITEMS 3 & 4 REMOVED FOR CLARITY

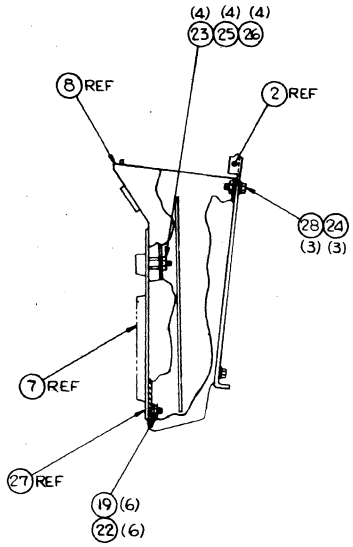

VIEW B-B
(ROTATED 90° CCW)

DISPLAY STATION (80 x 8) 208/230 V	CODE IDENT 15920	D	DWG NO 62159400	REV G
			SHEET 4	

CONTROL DATA

ASSEMBLY PARTS LIST

PRINT DATE	PAGE	FILE CHANGE NO.
12-07-72	1	00000999

DIV.	ASSEMBLY NUMBER	CD	REV.	DWG.	DESCRIPTION	MC	STATUS	STATUS DATE	ENG. RESP.	FILE DATE
0480	62159400	1	H		DISPLAY STATION 80X8 220/240V	N	REL	05-16-72		12-07-72

T	FIND NO	LI	PART NUMBER	CD	M	QUANTITY	U/M	PART DESCRIPTION	MC	YLD	ECO. NO. IN	ECO. NO. OUT	S/N	WK IN	WK OUT
	001	01	71273300	5		1	PC	BASE, TERMINAL	P						
	002	01	62100100	7		1	PC	CHASSIS ASSY	N			DT00428			7213
	002	02	62100101	5		1	PC	CHASSIS ASSY	N		DT00428	DT00573		7213	7223
	002	03	71273200	7		1	PC	CHASSIS, BASE CONTROLLER	P		DT00573	62003803		7223	7228
	002	04	71273200	7		REF	PC	CHASSIS, BASE CONTROLLER	P		62003803			7228	
	003	01	62136600	4		1	PC	DISPLAY HEAD	N						
	004	01	62023601	8		1	PC	HOOD ASSEMBLY 24 V	N			DT00428			7213
	004	02	62023605	9		1	PC	HOOD ASSY	N		DT00428	DT00573		7213	7223
	004	03	62157001	9		1	PC	HOOD ASSY	N		DT00573	DT00640		7223	7228
	004	04	62171201	7		1	PC	HOOD ASSY GOLD 50H2	N		DT00640			7228	
	005	01	62023701	6		1	PC	PANEL ASSY VIEWING	N			DT00903			7239
	005	02	62023700	8		1	PC	PANEL ASSEMBLY VIEWING	N		DT00903			7239	
	006	01	62012600	3		1	PC	CONNECTOR PANEL ASSY 208/230V	N			62003803			7228
	006	02	62012600	3		REF	PC	CONNECTOR PANEL ASSY 208/230V	N		62003803			7228	
	007	01	62010000	8		1	PC	KEYBOARD	P			62003803			7228
	007	02	62010000	8		REF	PC	KEYBOARD	P		62003803			7228	
	008	01	61207300	7		1	PC	CONTROL ASSY - 713 DISPLAY	N			62003803			7228
	008	02	61207300	7		REF	PC	CONTROL ASSY - 713 DISPLAY	N		62003803			7228	
	009	01	62139300	8		1	PC	LOGIC MODULE ASSY	N						
	010	01	61207800	5		1	PC	CONTROL ASSY CRT/KEYLOCK	N			62003803			7228
	010	02	61207800	6		REF	PC	CONTROL ASSY CRT/KEYLOCK	N		62003803	DT00999		7228	7249
	010	03	61207800	6		1	PC	CONTROL ASSY CRT/KEYLOCK	N		DT00999			7249	
	011	01	62137500	5		1	PC	CABLE SET	N						
	012	01	51534900	9		1	PC	KNOB, BUCKEYE N	P			DT00550			7231
	012	02	51860000	2		1	PC	KNOB PLAIN	P		DT00550			7231	
	013	01	51781500	7		4	PC	RECEPTACLE-CLIP ON	P			DT00999			7249
	014	01	00860325	0		4	PC	SCREW SELF LOCKING 10-32X1/2	B			DT00428			7213

CONTROL DATA

ASSEMBLY PARTS LIST

PRINT DATE	PAGE	FILE CHANGE NO.
12-07-72	2	00000999

DIV.	ASSEMBLY NUMBER	CD	REV.	DWG.	DESCRIPTION	MC	STATUS	STATUS DATE	ENG. RESP.	FILE DATE
0480	62159400	1	H		DISPLAY STATION 80X8 220/240V	N	REL	05-16-72		12-07-72

T	FIND NO	LI	PART NUMBER	CD	M	QUANTITY	U/M	PART DESCRIPTION	MC	YLD	ECO. NO. IN	ECO. NO. OUT	S/N	WK IN	WK OUT
	014	02	00860325	0		2	PC	SCREW SELF LOCKING 10-32X1/2	B		DT00428	DT00999		7213	7249
	014	03	00860324	3		6	PC	SCREW SELF LOCKING 10-32X3/8	B		DT00999			7249	
	015	01	62022300	8		4	PC	SCREW-SELF LOCKING 10-32X1/4	B			DT00999			7249
	015	02	62022300	8		2	PC	SCREW-SELF LOCKING 10-32X1/4	B		DT00999			7249	
	016	01	93948005	9		1	PC	CONNECTOR 4 PIN HOUSING	P						
	017	01	10125715	2		2	PC	SCREW MACH FLT HD 6-32X1/2	B						
	018	01	10122904	5		2	PC	NUT TWIN SELF LOCKING 10-32	B			62003803			7229
	018	02	10122904	5		REF	PC	NUT TWIN SELF LOCKING 10-32	B		62003803			7229	
	019	01	10126403	4		8	PC	LOCK WASHER EXT #10	B			62003803			7229
	019	02	10126403	4		REF	PC	LOCK WASHER EXT #10	B		62003803			7229	
	020	01	15001200	3		1	PC	ID CABINET	P			DT00903			7239
	020	02	62158600	7		1	PC	ID PLATE EQUIPMENT MEDIUM	P		DT00903			7239	
	021	01	62050200	5		5	PC	CABLE CLAMP	B			62003803			7246
	021	02	62050200	5		REF	PC	CABLE CLAMP	B		62003803	DT00999		7246	7249
	021	03	62050200	5		REF 3	PC	CABLE CLAMP	B		62003803			7249	
	022	01	00860109	8		6	PC	NUT LOCK #10-32	B			62003803			7229
	022	02	00860109	8		REF	PC	NUT LOCK #10-32	B		62003803			7229	
	023	01	00860101	5		4	PC	NUT SELF-LOCKING,PLATE 6-32	B			62003803			7229
	023	02	00860101	5		REF	PC	NUT SELF-LOCKING,PLATE 6-32	B		62003803			7229	
	024	01	00838206	1		3	PC	NUT U TYPE 6-32	B			62003803			7229
	024	02	00838206	1		REF	PC	NUT U TYPE 6-32	B		62003803			7229	
	025	01	62051918	1		4	PC	STANDOFF - HEX	P			62003803			7228
	025	02	62051918	1		REF	PC	STANDOFF - HEX	P		62003803			7228	
	026	01	10126401	8		4	PC	WASHER EXT TOOTH LOCK NO.4	B						
	027	01	62011900	8		1	PC	MASK KEYBARD	P			62003803			7228
	027	02	62011900	8		REF	PC	MASK KEYBARD	P		62003803			7228	
	028	01	00860303	7		15	PC	SCREW-SELF LOCKING 6-32X3/8	B						

CONTROL DATA

ASSEMBLY PARTS LIST

PRINT DATE	PAGE	FILE CHANGE NO.
12-07-72	3	00000999

DIV.	ASSEMBLY NUMBER	CD	REV.	DWG.	DESCRIPTION	MC	STATUS	STATUS DATE	ENG. RESP.	FILE DATE
0480	62159400	1	H		DISPLAY STATION 80X8 220/240V	N	REL	05-16-72		12-07-72

T	FIND NO	LI	PART NUMBER	CD	M	QUANTITY	U/M	PART DESCRIPTION	MC	YLD	ECO. NO. IN	ECO. NO. OUT	S/N	WK IN	WK OUT
	029	01	00860308	6		2	PC	SCREW SELF LOCKING 6-32X1	B						
	030	01	62032100	0		1	PC	DATA SET CABLE, EXTERNAL ASSY	A			DT00903			7239
	031	01	94277400	1		5	PC	CABLE TIE STRAP 1/16-8/8 DIA.	B			62003803			7229
	031	02	94277400	1		REF	PC	CABLE TIE STRAP 1/16-8/8 DIA.	B		62003803	DT00999		7229	7249
	031	03	94277400	1		~~REF~~ 3	PC	CABLE TIE STRAP 1/16-8/8 DIA.	B		62003803			7249	
	032	01	62019500	8		1	PC	DECAL ADHESIVE BACKED	P			62003803			7228
	032	02	62019500	8		REF	PC	DECAL ADHESIVE BACKED	P		62003803			7228	
	033	01	62121600	1		REF	PC	SPARES KIT =1 92413	A			DT00903			7239
	033	02	00838200	4		4	PC	NUT,[UI TYPE 6/32	B		DT00903			7239	
	034	01	62121700	9		REF	PC	SPARES KIT =2 92413	A			DT00903			7239
	034	02	62121600	1		REF	PC	SPARES KIT =1 92413	A		DT00903			7239	
	035	01	62107600	9		REF	PC	GENEOLOGY CHART	D			DT00903			7239
	035	02	62121700	9		REF	PC	SPARES KIT =2 92413	A		DT00903			7239	
	036	01	62119700	3		REF	PC	WIRING DIAGRAM PWR DIST	D			DT00903			7239
	036	02	62107600	9		REF	PC	GENEOLOGY CHART	D		DT00903			7239	
	037	01	00860326	8		2	PC	SCREW =10-32X5/8	B		DT00428	DT00903		7213	7239
	037	02	62119700	3		REF	PC	WIRING DIAGRAM PWR DIST	D		DT00903			7239	
	038	01	51732900	9		2	PC	NUT SHEET SPRNG	B		DT00573	DT00903		7223	7239
	038	02	00860326	8		2	PC	SCREW =10-32X5/8	B		DT00903			7239	
	039	01	59109100	4		REF	PC	PACKAGING INSTRUCTION	D		DT00573	DT00903		7223	7239
	039	02	51732900	9		2	PC	NUT SHEET SPRNG	B		DT00903			7239	
	040	01	62032101	8		1	PC	DATA SET CABLE, EXTERNAL ASSY	A		DT00550	DT00903		7231	7239
	040	02	59109100	4		REF	PC	PACKAGING INSTRUCTION	D		DT00903			7239	
	041	01	51772102	3		2	PC	NUT RETAINER	B		DT00616	DT00903		7229	7239
	041	02	62032101	8		1	PC	DATA SET CABLE, EXTERNAL ASSY	A		DT00903			7239	
	042	01	51772102	3		2	PC	NUT RETAINER	B		DT00903			7239	
	043	01	10124202	2		1	PC	F.C.O. LOG	B		DT00903			7239	

CONTROL DATA

ASSEMBLY PARTS LIST

PRINT DATE	PAGE	FILE CHANGE NO.
12-07-72	4	00000999

DIV.	ASSEMBLY NUMBER	CD	REV.	DWG.	DESCRIPTION	MC	STATUS	STATUS DATE	ENG. RESP.	FILE DATE
0480	62159400	1	H		DISPLAY STATION 80X8 220/240V	N	REL	05-16-72		12-07-72

T	FIND NO	LI	PART NUMBER	CD	M	QUANTITY	U/M	PART DESCRIPTION	MC	YLD	ECO. NO. IN	ECO. NO. OUT	S/N	WK IN	WK OUT
	999	01	62003803	4		1	PC	PHONY CHASSIS ASSY CC5A2B	N		REF			7228	
								0082 TOTAL LINES							

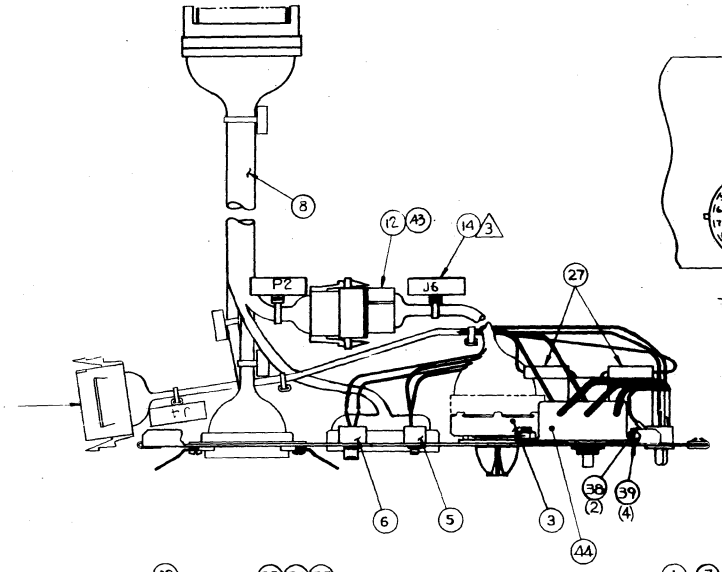

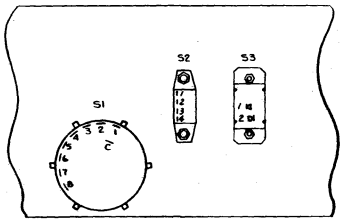

TERMINAL ORIENTATION
S1, S2, S3.

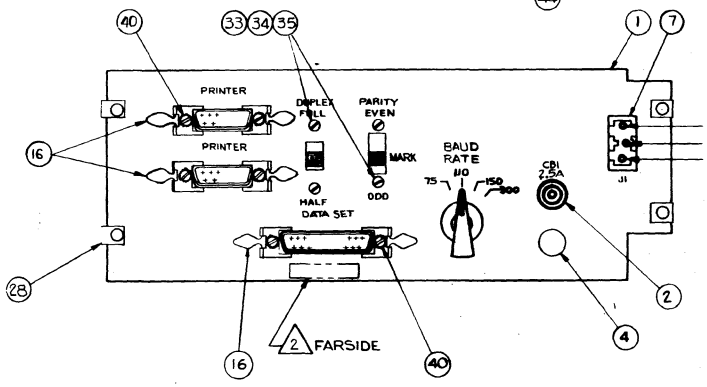

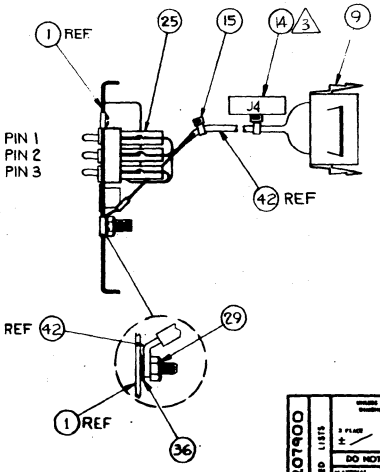

NOTES:

1. REFERENCE DESIGNATIONS ARE SHOWN FOR REFERENCE ONLY AND MAY NOT APPEAR ON PART
2. MARK "ASSY 61207900 REV " IN AREA SHOWN PER CDC SPEC 10121508, .12 HIGH, COLOR
3. MARK PER SPEC 10121508, CHARACTER HEIGHT .1 (.12 PT) COLOR BLACK

| SHEET REVISION STATUS | | |

ASSEMBLY PARTS LIST

PRINT DATE	PAGE	FILE CHANGE NO.
10-03-73	1	00000929

DIV.	ASSEMBLY NUMBER	CD	REV.	DWG.	DESCRIPTION	MC	STATUS	STATUS DATE	ENG. RESP.	FILE DATE
0480	61207900	4	H		CONNECTOR PANEL ASSY, 120V	N	REL	07-16-71		04-16-73

T	FIND NO	LI	PART NUMBER	CD	M	QUANTITY	U/M	PART DESCRIPTION	MC	YLD	ECO. NO. IN	ECO. NO. OUT	S/N	WK IN	WK OUT
	001	01	71282200	6		1	PC	PANEL, CONNECTOR	P						
	002	01	51782115	3		1	PC	CIRCUIT BREAKER	P						
	003	01	51781700	3		1	PC	SWITCH ROTARY	P						
	004	01	51570803	0		1	PC	BUTTON PLUG, .3	P			00000000			7131
	004	02	00843605	7		1	PC	BUTTON PLUG .3	P		00000000	DT00435		7131	7213
	004	03	51570803	0		1	PC	BUTTON PLUG, .3	P		DT00435			7213	
	005	01	51781600	5		1	PC	SWITCH SLIDE SP3P	P			00000000			7131
	005	02	62033000	1		1	PC	REPLACED BY 51781600	P		00000000	DT00712		7131	7229
	005	03	51781600	5		1	PC	SWITCH SLIDE SP3P	P		DT00712			7229	
	006	01	93884000	6		1	PC	SWITCH SLIDE SPST	P						
	007	01	62012800	9		1	PC	CONNECTOR 3 PIN 120-220 V	P						
	008	01	61207600	0		1	PC	INTERCONNECT CABLE ASSY TTY	A			DT00251C			7202
	008	02	62137300	0		1	PC	INTER CONNEC CABLE ASSY	N		DT00251C			7202	
	009	01	93947007	6		1	PC	CONNECTOR 15 SOCKET HOUSING	P			DT00225			7131
	009	02	93947007	6		1	PC	CONNECTOR 15 SOCKET HOUSING	P		DT00225A			7149	
	010	01	93943000	5		4	PC	CONTACT SOC TWO=18 GA STRIP	B			DT00225			7123
	012	01	93948001	8		1	PC	CONN PLUG ELEC 9 PIN CONTACTS	P			DT00225			7131
	012	02	93948001	8		1	PC	CONN PLUG ELEC 9 PIN CONTACTS	P		DT00225A			7149	
	013	01	93942000	6		9	PC	CONTACT PIN TWO=18 GA STRIP	P		00000000	00000000		7123	7131
	014	01	94277409	2		2	PC	STRAP,CABLE TIE W.093 LG 4	P						
	015	01	65372400	5		4	PC	TY-RAPS,SELF-LOCKING	P			DT00225			7139
	015	02	94277400	1		4	PC	CABLE TIE STRAP 1/16-5/8 DIA.	P		DT00225			7139	
	016	01	51584400	9		1	PC	LATCH SPRING LKG ASSY 9-37	P			00000000			7123
	016	02	51584400	9		3	PC	LATCH SPRING LKG ASSY 9-37	P		00000000	DT00522		7123	7213
	016	03	51853800	4		4	PR	LATCH SPRING ASSY PR	P		DT00522	DT00712		7213	7229
	016	04	51853800	4		6	PR	LATCH SPRING ASSY PR	P		DT00712	DT00929		7229	7237

ASSEMBLY PARTS LIST

PRINT DATE	PAGE	FILE CHANGE NO.
10-03-73	2	00000929

DIV.	ASSEMBLY NUMBER	CD	REV.	DWG.	DESCRIPTION	MC	STATUS	STATUS DATE	ENG. RESP.	FILE DATE
0480	61207900	4	H		CONNECTOR PANEL ASSY, 120V	N	REL	07-16-71		04-16-73

T	FIND NO	LI	PART NUMBER	CD	M	QUANTITY	U/M	PART DESCRIPTION	MC	YLD	ECO. NO. IN	ECO. NO. OUT	S/N	WK IN	WK OUT
	016	05	51853800	4		3	PR	LATCH SPRING ASSY PR	P		DT00929			7237	
	017	01	24524810	9		1	PC	LUG-TERMINAL	P			DT00225			7131
	018	01	93463000	5		1	FT	WIRE 18 AWG BLK STRD UL 300V	B			DT00225			7131
	019	01	93463555	8		1	FT	WIRE 18 AWG GRN STRD UL 300V	B			DT00225			7131
	020	01	93463999	8		1	FT	WIRE 18 AWG WHT STRD UL 300V	B			DT00225			7131
	021	01	93463222	5		1	FT	WIRE 18 AWG RED STRD UL 300V	B			DT00225			7131
	022	01	24548301	1		1	FT	WIRE 24 AWG BLK STRD UL 300V	B			DT00225			7131
	023	01	24548310	2		1	FT	WIRE 24 AWG WHT STRD UL 300V	B			DT00225			7131
	024	01	97001300	9		AR	LB	SOLDER	P			00000000			7131
	024	02	97001304	1		AR	FT	SOLDER WIRE 60/40 ROSIN .032	P		00000000			7131	
	025	01	24500809	9		1	PC	INS SLV 1/2 LENGTH U/L	P			00000000			7131
	025	02	24559311	6		200	FT	SLV ELEC HEAT SHRINK BLK	P		00000000	DT00929		7131	7237
	025	03	24534707	5		200	FT	SLV HEAT SHRINK BLK .187-.093	P		DT00929			7237	
	026	01	93747007	8		4	PC	RECP.110 SLIDE ON STR 22-18GA	P			DT00225			7139
	027	01	62022602	7		4	PC	FERRULES PRE-INSULATED	P			00000000			7131
	027	02	62020700	1		2	PC	HOUSING LUG TERMINAL .110	P		00000000	DT00225		7131	7139
	027	03	62020700	1		2	PC	HOUSING LUG TERMINAL .110	P		DT00712			7229	
	028	01	00838200	4		4	PC	NUT-CUI TYPE 6/32	B		00000000			7123	
	029	01	10125108	0		1	PC	NUT HEX MACH 10-32	B		00000000	00000000		7123	7131
	029	02	10122904	5		1	PC	NUT TWIN SELF LOCKING 10-32	B		00000000			7131	
	030	01	10127321	7		6	PC	SCREW MACH PH 4-40X5/16 SLOTT	B		00000000	DT00168		7131	7144
	031	01	10125103	1		6	PC	NUT 4-40 HEX	B		00000000	DT00168		7131	7144
	032	01	10126101	4		6	PC	WASHER LOCK INT TOOTH 4 STEEL	B		00000000	DT00168		7131	7144
	033	01	10127309	2		4	PC	SCREW 2-56X.250	B		00000000	00000000		7123	7131

ASSEMBLY PARTS LIST

PRINT DATE	PAGE	FILE CHANGE NO.
10-03-73	3	00000929

DIV.	ASSEMBLY NUMBER	CD	REV.	DWG.	DESCRIPTION	MC	STATUS	STATUS DATE	ENG. RESP.	FILE DATE
0480	61207900	4	H		CONNECTOR PANEL ASSY, 120V	N	REL	07-16-71		04-16-73

T	FIND NO	LI	PART NUMBER	CD	M	QUANTITY	U/M	PART DESCRIPTION	MC	YLD	ECO. NO. IN	ECO. NO. OUT	S/N	WK IN	WK OUT
	033	02	10127311	8		4	PC	SCREW 2-56X1/4	B		00000000	00000000		7131	7131
	033	03	10127332	4		4	PC	SCRW MACH PH 6-32X1/4 SLOTTED	B		00000000	DT00712		7131	7229
	033	04	10127102	1		4	PC	SCREW MACH PAN HD 4-40X1/4 ST	B		DT00712			7229	
	034	01	10125102	3		4	PC	NUT HEX 256 STEEL CAD PLT CLR	B		00000000	00000000		7123	7131
	034	02	10125105	6		4	PC	NUT HEX MACH 6-32	B		00000000	DT00712		7131	7229
	034	03	10125103	1		4	PC	NUT 4-40 HEX	B		DT00712			7229	
	035	01	10125800	2		4	PC	WASHER SPRG LOCK 2 STEEL CAD	B		00000000	00000000		7123	7131
	035	02	10126100	6		4	PC	LOCKWASHER	B		00000000	00000000		7131	7131
	035	03	10126103	0		4	PC	WASHER LOCK INT TOOTH 6 STL	B		00000000	DT00712		7131	7229
	035	04	10126101	4		8	PC	WASHER LOCK INT TOOTH 4 STEEL	B		DT00712			7229	
	036	01	10126105	5		1	PC	WASHER LOCK INT TOOTH 10 STL	B		00000000	00000000		7123	7131
	036	02	10126403	4		1	PC	WASHER LOCK EXT NO. 10	B		00000000			7131	
	037	01	62071517	7		1	PC	FILTER RFI 5 AMP	P		DT00168	DT00225A		7149	7217
	038	01	00860101	5		2	PC	NUT SELF-LOCKING,PLATE 6-32	B		DT00168	DT00929		7139	7237
	038	02	10122901	1		2	PC	NUT TWIN SELF LOCKING 6-32	B		DT00929			7237	
	039	01	10126401	8		2	PC	WASHER EXT TOOTH LOCK NO.6	B		DT00168	DT00712		7131	7229
	039	02	10126401	8		4	PC	WASHER EXT TOOTH LOCK NO.6	B		DT00712	DT00929		7229	7237
	039	03	10126401	8		2	PC	WASHER EXT TOOTH LOCK NO.6	B		DT00929			7237	
	040	01	10126400	0		12	PC	WASHER LOCK EXT TOOTH 4 STEEL	H		DT00168			7131	
	041	01	00815710	9		1	PC	KNOB - POINTER	P		DT00225	DT00712		7131	7229
	042	01	62007300	7		1	PC	J4 WIRE PREP CB1	N		DT00225A			7131	
	043	01	62007600	0		1	PC	J6 WIRE PREP	N		DT00225A			7131	
	044	01	62007900	4		1	PC	RFI FILTER PREP 120V	A		DT00225A			7149	
	045	01	51853801	2		2	PR	LATCH SPRING ASSY PR	P		DT00522	DT00712		7213	7229

ASSEMBLY PARTS LIST

PRINT DATE	PAGE	FILE CHANGE NO.
10-03-73	4	00000929

DIV.	ASSEMBLY NUMBER	CD	REV.	DWG.	DESCRIPTION	MC	STATUS	STATUS DATE	ENG. RESP.	FILE DATE
0480	61207900	4	H		CONNECTOR PANEL ASSY, 120V	N	REL	07-16-71		04-16-73

T	FIND NO	LI	PART NUMBER	CD	M	QUANTITY	U/M	PART DESCRIPTION	MC	YLD	ECO. NO. IN	ECO. NO. OUT	S/N	WK IN	WK OUT
								0074 TOTAL LINES							

| SHEET REVISION STATUS | | |

CONTROL DATA

ASSEMBLY PARTS LIST

PRINT DATE	PAGE	FILE CHANGE NO.
07-20-72	1	0000~~312~~ 929

DIV.	ASSEMBLY NUMBER	CD	REV.	DWG.	DESCRIPTION	MC	STATUS	STATUS DATE	ENG. RESP.	FILE DATE
0480	62012600	3	H		CONNECTOR PANEL ASSY 208/230V	N	REL	07-16-71		07-20-72

T	FIND NO	LI	PART NUMBER	CD	M	QUANTITY	U/M	PART DESCRIPTION	MC	YLD	ECO. NO. IN	ECO. NO. OUT	S/N	WK IN	WK OUT
	001	01	71282200	6		1	PC	PANEL, CONNECTOR	P						
	002	01	51782115	3		1	PC	CIRCUIT BREAKER	P						
	003	01	51781700	3		1	PC	SWITCH ROTARY	P						
	004	01	62011500	6		1	PC	SWITCH ROTARY 2 POS MAINT	P						
	005	01	51781600	5		1	PC	SWITCH SLIDE SP3P	P			00000000			7131
	005	02	62033000	1		1	PC	SWITCH SLIDE SP3P	P		00000000	DT00712		7131	7229
	005	03	51781600	5		1	PC	SWITCH SLIDE SP3P	P		DT00712			7229	
	006	01	93884000	6		1	PC	SWITCH SLIDE SPST	P						
	007	01	62012800	9		1	PC	CONNECTOR 3 PIN 12?-22? V	P						
	008	01	61207600	0		1	PC	INTERCONNECT CABLE ASSY TTY	A			DT00251C			7202
	008	02	62137300	0		1	PC	INTER CONNEC CABLE ASSY	A		DT00251C			7202	
	009	01	93947007	6		1	PC	CONNECTOR 15 SOCKET HOUSING	P			DT00225			7139
	009	02	62071517	7		1	PC	FILTER RFI 5 AMP	P		DT00225	DT00225A		7139	7149
	009	03	93947007	6		1	PC	CONNECTOR 15 SOCKET HOUSING	P		DT00225A			7149	
	010	01	93943000	5		4	PC	CONTACT SOC TWO#18 GA STRIP	B			DT00225			7139
	010	02	00815710	9		1	PC	KNOB - POINTER	P		DT00225	DT00712		7139	7229
	011	01	62021500	4		12	PC	CONTACT SOCKET 18-22GA	P		00071491	DT00225		7139	7139
	012	01	93948001	8		1	PC	CONN PLUG ELEC 9 PIN CONTACTS	P			DT00225			7139
	012	02	93948001	8		1	PC	CONN PLUG ELEC 9 PIN CONTACTS	P		DT00712			7229	
	013	01	62021400	7		9	PC	CONTACT PIN 18-22 GA	B		00071491	DT00225		7139	7139
	014	01	94277409	2		2	PC	STRAP,CABLE TIE W,.93 LG 4	B			DT00225			7139
	014	02	94277409	2		2	PC	STRAP,CABLE TIE W,.93 LG 4	B		DT00225A			7139	
	015	01	65372400	5		4	PC	TY-RAPS,SELF-LOCKING	P			DT00225			7139
	015	02	94277400	1		3	PC	CABLE TIE STRAP 1/16-5/8 DIA,	B		DT00225			7139	
	016	01	51584400	9		1	PC	LATCH SPRING LKG ASSY 9-37	P			DT00225			7139

CONTROL DATA

ASSEMBLY PARTS LIST

PRINT DATE	PAGE	FILE CHANGE NO.
07-20-72	2	0000~~312~~ 929

DIV.	ASSEMBLY NUMBER	CD	REV.	DWG.	DESCRIPTION	MC	STATUS	STATUS DATE	ENG. RESP.	FILE DATE
0480	62012600	3	H		CONNECTOR PANEL ASSY 208/230V	N	REL	07-16-71		07-20-72

T	FIND NO	LI	PART NUMBER	CD	M	QUANTITY	U/M	PART DESCRIPTION	MC	YLD	ECO. NO. IN	ECO. NO. OUT	S/N	WK IN	WK OUT
	016	02	51584400	9		3	PC	LATCH SPRING LKG ASSY 9-37	P		DT00225	DT00522		7139	7213
	016	03	51853800	4		6 3	PC	SPRING LATCH ASSY	P		DT00522			7213	
	017	01	24524810	9		1	PC	LUG-TERMINAL	B			DT00225			7139
	018	01	93463000	5		1	FT	WIRE 18 AWG BLK STRD UL 300V	B			DT00225			7139
	019	01	93463555	8		1	FT	WIRE 18 AWG GRN STRD UL 300V	B			DT00225			7139
	020	01	93463999	8		1	FT	WIRE 18 AWG WHT STRD UL 300V	B			DT00225			7139
	021	01	62014700	9		1	PC	DECAL-PLATE INSTRUCTION	P						
	022	01	24548301	1		1	FT	WIRE 24 AWG BLK STRD UL 300V	B			DT00225			7139
	023	01	24548310	2		1	FT	WIRE 24 AWG WHT STRD UL 300V	B			DT00225			7139
	024	01	97001300	9		AR	LB	SOLDER	B			00000000			7131
	024	02	97001304	1		AR	FT	SOLDER WIRE 60/40 ROSIN .032	B		00000000			7131	
	025	01	24500809	9		1	PC	INS SLV 1/2 LENGTH U/L	B			00000000			7131
	025	02	24559311	6		200	FT	SLV ELEC HEAT SH INK BLK	B		00000000	DT00712		7131	7229
	025	03	24559311	6		375	FT	SLV ELEC HEAT SHRINK BLK	B		DT00712	DT929		7229	
	025		24534707			375	FT	SLV ELEC HEAT SHRINK BLK			DT929				
	026	01	93747007	8		2	PC	RECP,11? SLIDE ON STR 22-18GA	P		00000000	DT00225		7119	7139
	026	02	93747007	8		1	PC	RECP,11? SLIDE ON STR 22-18GA	P		DT00225	DT00225A		7139	7149
	027	01	62022602	7		2	PC	FERRULES PRE-INSULATED	B		00000000	00000000		7119	7131
	027	02	62020700	1		2	PC	HOUSING LUG TERMINAL .11?	P		00000000	DT00225		7131	7139
	027	03	62020700	1		1	PC	HOUSING LUG TERMINAL .11?	P		DT00225	DT00225A		7139	7149
	027	04	62020700	1		2	PC	HOUSING LUG TERMINAL .11?	P		DT00225A			7149	
	028	01	00838200	4		4	PC	NUT,EXT TYPE 6/32	B		00000000			7131	
	029	01	10122904	5		1	PC	NUT-TWIN LOCK #10-32	B		00000000			7131	
	030	01	10127321	7		6	PC	SCREW MACH PH 4-40X5/16 SLOTT	B		00000000	DT00168		7131	7139
	031	01	10125103	1		6	PC	NUT 4-40 HEX	B		00000000	DT00168		7131	7139
	032	01	10126101	4		6	PC	WASHER LOCK INT TOOTH 4 STEEL	B		00000000	DT00168		7131	7139

CONTROL DATA

ASSEMBLY PARTS LIST

PRINT DATE	PAGE	FILE CHANGE NO.
07-20-72	3	0000~~0715~~ 0729

DIV.	ASSEMBLY NUMBER	CD	REV.	DWG.	DESCRIPTION	MC	STATUS	STATUS DATE	ENG. RESP.	FILE DATE
0480	62012600	3	M		CONNECTOR PANEL ASSY 208/230V	N	REL	07-16-71		07-20-72

T	FIND NO	LI	PART NUMBER	CD	M	QUANTITY		U/M	PART DESCRIPTION	MC	YLD	ECO. NO. IN	ECO. NO. OUT	S/N	WK IN	WK OUT
	032	02	10126400	0		12		PC	WASHER LOCK EXT TOOTH 4 STEEL	B		DT00168			7139	
	033	01	10127332	4		4		PC	SCRW MACH PH 6-32X1/4 SLOTTED	B		00000000	DT00712		7131	7229
	033	02	10127102	1		4		PC	SCREW MACH PAN HD 4-40X1/4 ST	B		DT00712			7229	
	034	01	10125105	6		4		PC	NUT HEX MACH 4-32	B		00000000	DT00712		7131	7229
	034	02	10125103	1		4		-C	NUT 4-40 HEX	B		DT00712			7229	
	035	01	10126103	0		4		PC	WASHER LOCK INT TOOTH 6 STL	B		00000000	DT00712		7131	7229
	035	02	10126101	4		8		PC	WASHER LOCK INT TOOTH 4 STEEL	B		DT00712			7229	
	036	01	10126403	4		1		PC	LOCK WASHER EXT #10	B		00000000			7131	
	037	01	62071517	7		1		PC	FILTER RFI 5 AMP	P		DT00163	DT00225		7149	7149
	037	02	62007700	8		1		-C	J4 WIRE PREP S 4	A		DT00225A			7149	
	038	01	00860101	5		2		PC	NUT SELF-LOCKING,PLATE 6-32	B		DT00168	DT929		7139	
	038		10122901			2		PC	NUT TWIN LOCKING 6-32			DT929				
	039	01	10126401	8		2		PC	WASHER EXT TOOTH LOCK NO.6	B		DT00225	DT00712		7139	7229
	039	02	10126401	8		4/2		PC	WASHE EXT TOOTH LOCK NO.6	B		DT00712			7229	
	040	01	93463333	0		1		FT	WIRE 18 AWG ORN STRD UL 300V	B		DT00168	DT00225		7131	7139
	040	02	62007600	0		1		PC	J6 WIRE PREP	A		DT00225			7139	
	041	01	93463888	3		1	500	FT	WIRE 18 AWG GRA STRD UL 300V	B		DT00168	DT00225		7131	7139
	042	01	62007901	2		1		PC	RFI FILTER PREP 240V	A		DT00225A	DT00225B		7149	7219
	042	02	62164500	1		1		PC	RFI FILTER PREP 240V	A		DT00225B			7219	

0068 TOTAL LINES

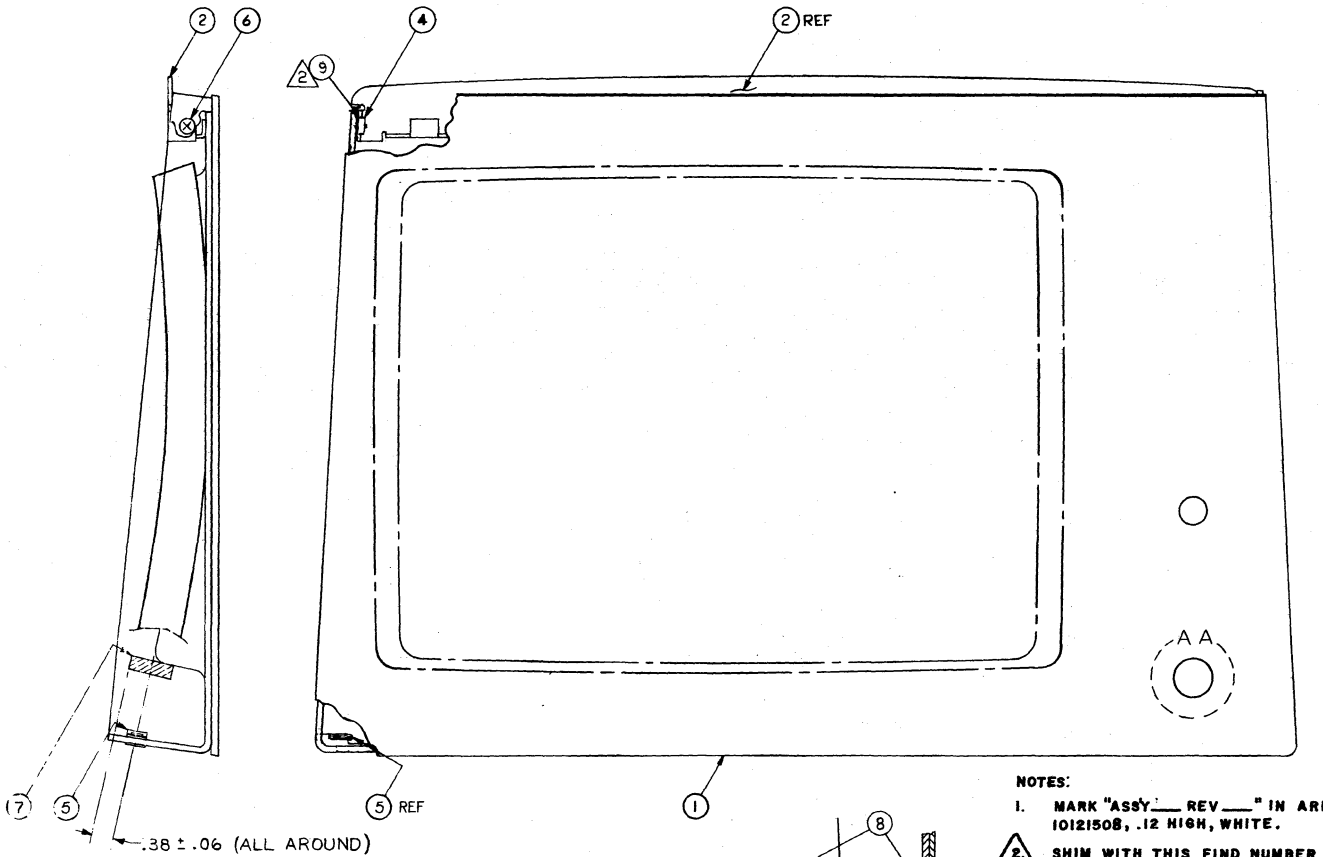

VIEW A-A
USED ON 62023701 AND
62023703 ONLY

SHEET REVISION STATUS	REVISION RECORD						
	REV	ECO	DESCRIPTION	DRFT	DATE	CHKD	APP
	01	[illegible]	CLASS D RELEASE	[illegible]	[illegible]	[illegible]	[illegible]
	A	Drawing	RELEASED				
	B	DT00393	REVISED PER ECO	DS	3/24/72	EC	
	C	DT00595	APL CHANGE	[illegible]	4/17/72	[illegible]	[illegible]
	D	DT726	CHG APL ONLY	[illegible]	4/	[illegible]	[illegible]
	E	DT+65	REVISED PER ECO	[illegible]	[illegible]	[illegible]	[illegible]
	F	DT1582	PL CHG ONLY	[illegible]	[illegible]	[illegible]	[illegible]
	G	DT1644	ADDED LARGER GASKET	[illegible]	[illegible]	[illegible]	[illegible]

NOTES:

1. MARK "ASSY ___ REV ___" IN AREA SHOWN PER CDC SPEC. 10121508, .12 HIGH, WHITE.
2. SHIM WITH THIS FIND NUMBER ONLY AS REQUIRED FOR VARIATIONS IN DIMENSIONS.

APL 62023703
APL 62023702
APL 62023701
APL 62023700

DETACHED LISTS

UNLESS OTHERWISE SPECIFIED DIMENSIONS ARE IN INCHES
TOLERANCES
2 PLACE ±
3 PLACE ±.03
ANGLES ±

DO NOT SCALE DRAWING

MATERIAL

FINISH

CONTROL DATA

FIRST USED ON		
DWN	Yatckoske	4-17-71
CHKD	[illegible]	[illegible]
ENGR	[illegible]	6/15/71
MFG	[illegible]	6/15/71
APPR	[illegible]	7/9/72

TITLE
PANEL ASSEMBLY (VIEWING)

CODE IDENT 15920

D

DRAWING NO 62023700

SCALE 1/1

NHA

SHEET ___ OF ___

ASSEMBLY PARTS LIST

PRINT DATE	PAGE	FILE CHANGE NO.
10-03-73	1	00001644

DIV.	ASSEMBLY NUMBER	CD	REV.	DWG.	DESCRIPTION	MC	STATUS	STATUS DATE	ENG. RESP.	FILE DATE
0480	62023700	8	G		PANEL ASSEMBLY VIEWING	A	REL	01-19-72		08-22-73

T	FIND NO	LI	PART NUMBER	CD	M	QUANTITY	U/M	PART DESCRIPTION	MC	YLD	ECO. NO. IN	ECO. NO. OUT	S/N	WK IN	WK OUT
	001	01	62014100	2		1	PC	SCREEN-VIEWING	N						
	002	01	62013200	1		1	PC	BRACKET CLOSURE	P						
	003	01	62017900	2		1	PC	DECAL-CONTROL PANEL	P			00000000			7150
	004	01	00838200	4		2	PC	NUT*CUT TYPE 6/32	B						
	005	01	51732900	9		2	PC	NUT SHEET SPRNG	B						
	006	01	10125713	7		2	PC	SCREW-FLAT HD, 6-32X5/16	B			DT00726			7229
	006	02	10125715	2		2	PC	SCREW MACH FLT HD 6-32X1/2	B		DT00726			7229	
	007	01	62014300	8		3 333	FT	FOAM RUBBER ADH	P		00000000	DT00595		7135	7234
	007	02	16373209	2		3 333	FT	TAPE LOW DENSITY FOAM 1/4X3/8	B		DT00595	DT01644		7234	7334
	007	03	71396300	7		3 333	PC	GASKET BEZEL	P		DT01644			7334	
	009	01	10125707	9		2	PC	SCRW MACH FH 82DEG 4-40X3/4	B		DT00465	DT01582		7236	7331
	009	02	10125607	1		2	PC	WASHER FLT NO.10 STEEL	B		DT01582			7331	
								0012 TOTAL LINES							

ASSEMBLY PARTS LIST

PRINT DATE	PAGE	FILE CHANGE NO.
10-03-73	1	00001644

DIV.	ASSEMBLY NUMBER	CD	REV.	DWG.	DESCRIPTION	MC	STATUS	STATUS DATE	ENG. RESP.	FILE DATE
0480	62023701	6	G		PANEL ASSY VIEWING	A	REL	01-19-72		08-22-73

T	FIND NO	LI	PART NUMBER	CD	M	QUANTITY	U/M	PART DESCRIPTION	MC	YLD	ECO. NO. IN	ECO. NO. OUT	S/N	WK IN	WK OUT
	001	01	62014100	2		1	PC	SCREEN-VIEWING	N			00000000			7152
	001	02	62014101	0		1	PC	SCREEN VIEWING	N		00000000			7152	
	002	01	62013200	1		1	PC	BRACKET CLOSURE	P						
	003	01	62017901	0		1	PC	DECAL-CONTROL PANEL	P		00000000	00000000		7117	7150
	004	01	00838200	4		2	PC	NUT*CUT TYPE 6/32	B						
	005	01	51732900	9		2	PC	NUT SHEET SPRNG	B						
	006	01	10125713	7		2	PC	SCREW-FLAT HD, 6-32X5/16	B			DT00726			7229
	006	02	10125715	2		2	PC	SCREW MACH FLT HD 6-32X1/2	B		DT00726			7229	
	007	01	62014300	8		3 333	FT	FOAM RUBBER ADH	P		00000000	DT00595		7135	7234
	007	02	16373209	2		3 333	FT	TAPE LOW DENSITY FOAM 1/4X3/8	B		DT00595	DT01644		7234	7334
	007	03	71396300	7		3 333	PC	GASKET BEZEL	P		DT01644			7334	
	008	01	51570807	1		1	PC	BUTTON PLUG .625	P		DT00383			7203	
	009	01	10125707	9		2	PC	SCRW MACH FH 82DEG 4-40X3/4	B		DT00465	DT01582		7236	7331
	009	02	10125607	1		2	PC	WASHER FLT NO.10 STEEL	B		DT01582			7331	
								0014 TOTAL LINES							

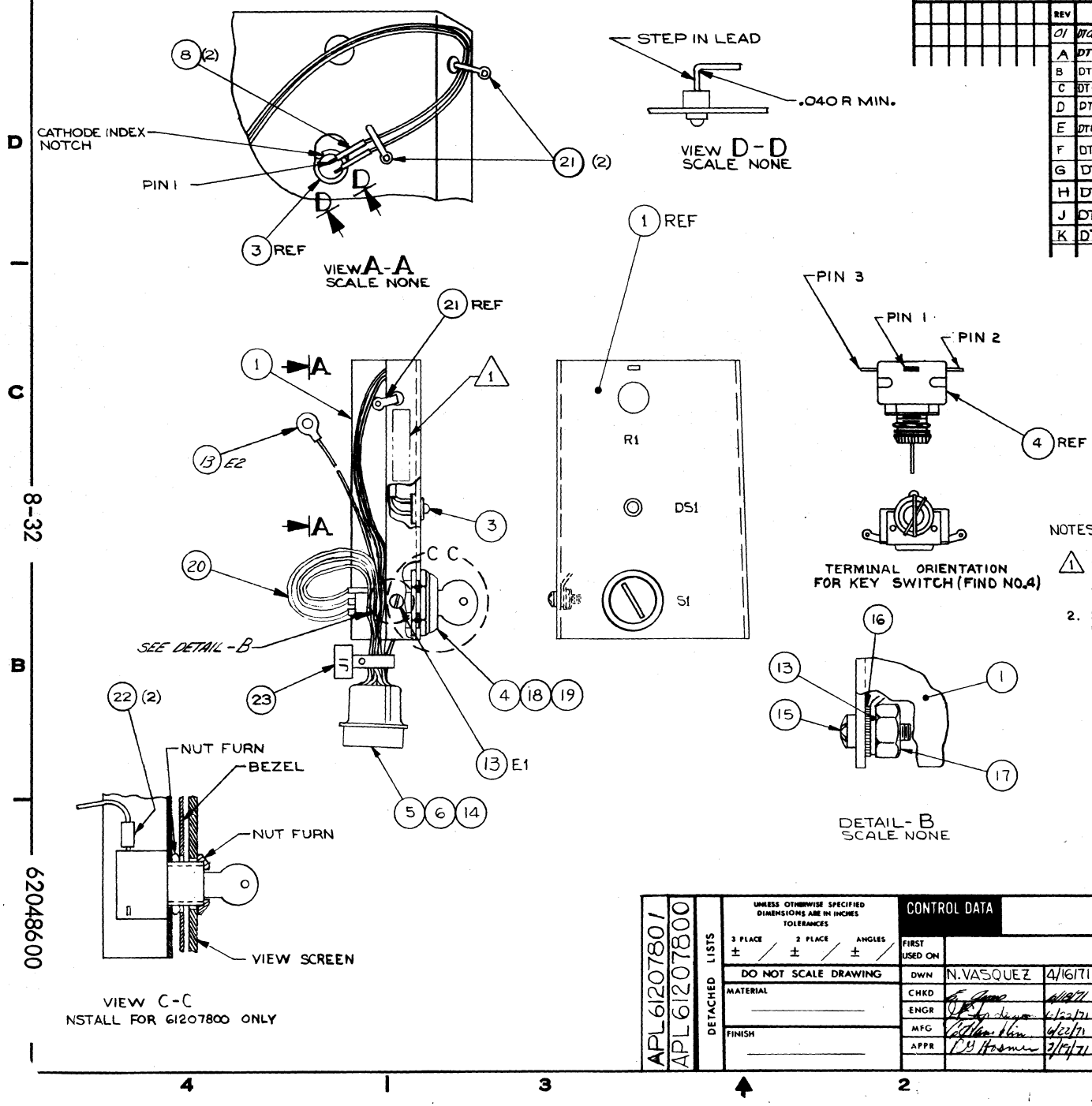

SHEET REVISION STATUS	REV	ECO	DESCRIPTION	DRFT	DATE	CHKD	APP
	01	DT00023-08	CLASS B RELEASE	[illegible]	6/25/71	[illegible]	M.C.J.
	A	DT00143	RELEASED	—	7/24/71	—	M.C.J.
	B	DT00190	REVISED APL'S AND WL'S	DC 10/8/71	10/28/71	[illegible]	[illegible]
	C	DT00219	ADDED FIND Nº3 18 & 19, REVISED APL	[illegible]	11/13/71	[illegible]	[illegible]
	D	DT00383	REVISED PER ECO	D.S. 3/17/72	3/20/72	RE	[illegible]
	E	DT00238	REVISED PER ECO	D.S. 3/17/72	3/20/72	RE	[illegible]
	F	DT543	REVISED PER ECO	DA 6/20/72	6/27/72	[illegible]	[illegible]
	G	DT520	REVISED PER ECO	DAO	8/18/72	[illegible]	[illegible]
	H	DT410	CHG APL ONLY	DAO	9/5/72	[illegible]	[illegible]
	J	DT769	REVISED PER ECO	DAO	9/8/72	[illegible]	[illegible]
	K	DT1607	ADDED TERM. ORIENTATION	[illegible] 9/25/73	9/26/73	[illegible]	[illegible]

NOTES:

1. MARK "ASSY 61207800 REV__" IN AREA SHOWN PER CDC SPEC 10121508, .12 HIGH, BLACK.
2. ITEM 4 IS A SUPPLEMENTARY ITEM ON EC FOR 61207801 ONLY.

APL 61207801
APL 61207800

DETACHED LISTS

UNLESS OTHERWISE SPECIFIED DIMENSIONS ARE IN INCHES
TOLERANCES
3 PLACE ± / 2 PLACE ± / ANGLES ±

DO NOT SCALE DRAWING

MATERIAL

FINISH

CONTROL DATA

FIRST USED ON		
DWN	N. VASQUEZ	4/16/71
CHKD	[illegible]	4/18/71
ENGR	[illegible]	6/22/71
MFG	[illegible]	6/22/71
APPR	[illegible]	7/19/71

TITLE

CONTROL ASSEMBLY

CODE IDENT 15920 | C | DRAWING NO 61207800

SCALE 1/1 | NHA | SHEET OF

8-32

62048600

61207800

CONTROL DATA

ASSEMBLY PARTS LIST

PRINT DATE 10-02-73 | PAGE 1 | FILE CHANGE NO 00001607

DIV.	ASSEMBLY NUMBER	CD	REV.	DWG.	DESCRIPTION	MC	STATUS	STATUS DATE	ENG. RESP.	FILE DATE
0480	61207600	6	K		CONTROL ASSY CRT/KEYLOCK	N	REL	08-24-71		07-24-73

T	FIND NO	LI	PART NUMBER	CD	M	QUANTITY	U/M	PART DESCRIPTION	MC	YLD	ECO. NO. IN	ECO. NO. OUT	S/N	WK IN	WK OUT
	001	01	71274800	3		1	PC	BRACKET, MOUNTING	P						
	002	01	62017500	0		1	PC	CLIP-MTG, L.E. DIODE	P			DT00383			7148
	003	01	62017600	8		1	PC	DIODE, LE RED DIFFUSED LENS	P						
	004	01	62038200	2		1	PC	KEYSWITCH	P			00000000			7147
	004	02	62043100	7		1	PC	KEYSWITCH ASSY - 711/713	N		00000000	DT00219		7147	7147
	004	03	62038200	2		1	PC	KEYSWITCH	P		DT00219			7147	
	005	01	93948007	5		1	PC	CONNECTOR 6 PIN HOUSING	P						
	006	01	62021400	7		4	PC	CONTACT PIN 18-22 GA	B			DT00238			7152
	007	01	62050200	5		1	PC	CABLE CLAMP	B			DT00543			7225
	008	01	24500833	9		2	PC	INS SLV 1/2 LENGTH U/L	P			DT00410			7214
	008	02	24500803	2		2	PC	INS SLV 1/2 LENGTH U/L	P		DT00410	DT00769		7214	7235
	008	03	24500810	7		2	PC	INS SLV 1/2 LENGTH U/L	P		DT00769			7235	
	009	01	97001304	1		AR	FT	SOLDER WIRE 60/40 ROSIN .032	P		00000000			7135	
	010	01	24548302	9		300	FT	WIRE 24 AWG BRN STRD UL 300V	B			DT00190			7142
	010	02	24548302	9		500	FT	WIRE 24 AWG BRN STRD UL 300V	B		DT00190	DT00238		7142	7152
	011	01	24548310	2		300	FT	WIRE 24 AWG WHT STRD UL 300V	B			DT00190			7142
	011	02	24548310	2		500	FT	WIRE 24 AWG WHT STRD UL 300V	B		DT00190	DT00238		7142	7152
	012	01	93463555	8		1 500	FT	WIRE 18 AWG BRN STRD UL 300V	B			DT00238			7152
	013	01	24524827	3		2	PC	TERM LUG CRIMP INS 22-18GA#10	P			DT00238			7152
	014	01	93948000	6		1	PC	CONTACT PIN TWO#18 GA STRIP	P			DT00238			7152
	015	01	10127142	7		1	PC	SCREW MACH 10-32 X 3/8 PAN HD	B						
	016	01	10126403	4		1	PC	WASHER LOCK EXT NO. 10	B						
	017	01	10122904	5		1	PC	NUT TWIN SELF LOCKING 10-32	B						
	018	01	62038203	6		1	PC	KEY - ARROW HART 1561-487	P			DT00383			7203

CONTROL DATA

ASSEMBLY PARTS LIST

PRINT DATE 10-02-73 | PAGE 2 | FILE CHANGE NO 00001607

DIV.	ASSEMBLY NUMBER	CD	REV.	DWG.	DESCRIPTION	MC	STATUS	STATUS DATE	ENG. RESP.	FILE DATE
0480	61207600	6	K		CONTROL ASSY CRT/KEYLOCK	N	REL	08-24-71		07-24-73

T	FIND NO	LI	PART NUMBER	CD	M	QUANTITY	U/M	PART DESCRIPTION	MC	YLD	ECO. NO. IN	ECO. NO. OUT	S/N	WK IN	WK OUT
	019	01	62038204	4		1	PC	LOCKWASHER SPECIAL ARROW HART	P			DT00383			7203
	020	01	62008200	8		1	PC	WIRE PREP KEYLOCK	N		DT00238			7152	
	021	01	94277400	1		3	PC	CABLE TIE STRAP 1/16-5/8 DIA.	P		DT00383	DT00769		7203	7235
	021	02	94277400	1		4	PC	CABLE TIE STRAP 1/16-5/8 DIA.	P		DT00769			7235	
	022	01	24500803	2		2	PC	INS SLV 1/2 LENGTH U/L	P		DT00769			7235	
	023	01	94277409	2		1	PC	STRAP,CABLE TIE W.093 LG 4	P		DT00769			7235	

0030 TOTAL LINES

TABULATION		DETAIL "A"		DETAIL "B"	
PART NO	DIM "X"	DIM "Y"	DIM "Z"	DIM "Y"	DIM "Z"
61207000	.750 +.060 -.000	.280	1.300	.310	1.560
61207001	1.500 +.060 -.000	.280	2.050	.310	2.310
61207002	2.250 +.060 -.000	.280	2.800	.310	3.060
61207003	.625 +.060 -.000	.280	1.170	.310	1.430
61207004	1.250 +.060 -.000	.280	1.800	.310	2.060
61207005	1.875 +.060 -.000	.280	2.430	.310	2.690
61207006	.470 +.060 -.000	.280	1.020	.310	1.280
61207007	.940 +.060 -.000	.280	1.490	.310	1.750
61207008	1.410 +.060 -.000	.280	1.970	.310	2.220

SHEET REVISION STATUS

REVISION RECORD

REV	ECO	DESCRIPTION	DRFT	DATE	CHKD	APP
01	DT00023-03	CLASS B RELEASE	[illegible]	4/3/71	[illegible]	[illegible]
A	DT00143	RELEASED	—	7-20-71	—	[illegible]
B	DT00207	REVISED NOTE △1	[illegible]	9/1/71	[illegible]	[illegible]
C	7095	REVISED PER ECO	[illegible]	7/10/72	[illegible]	[illegible]

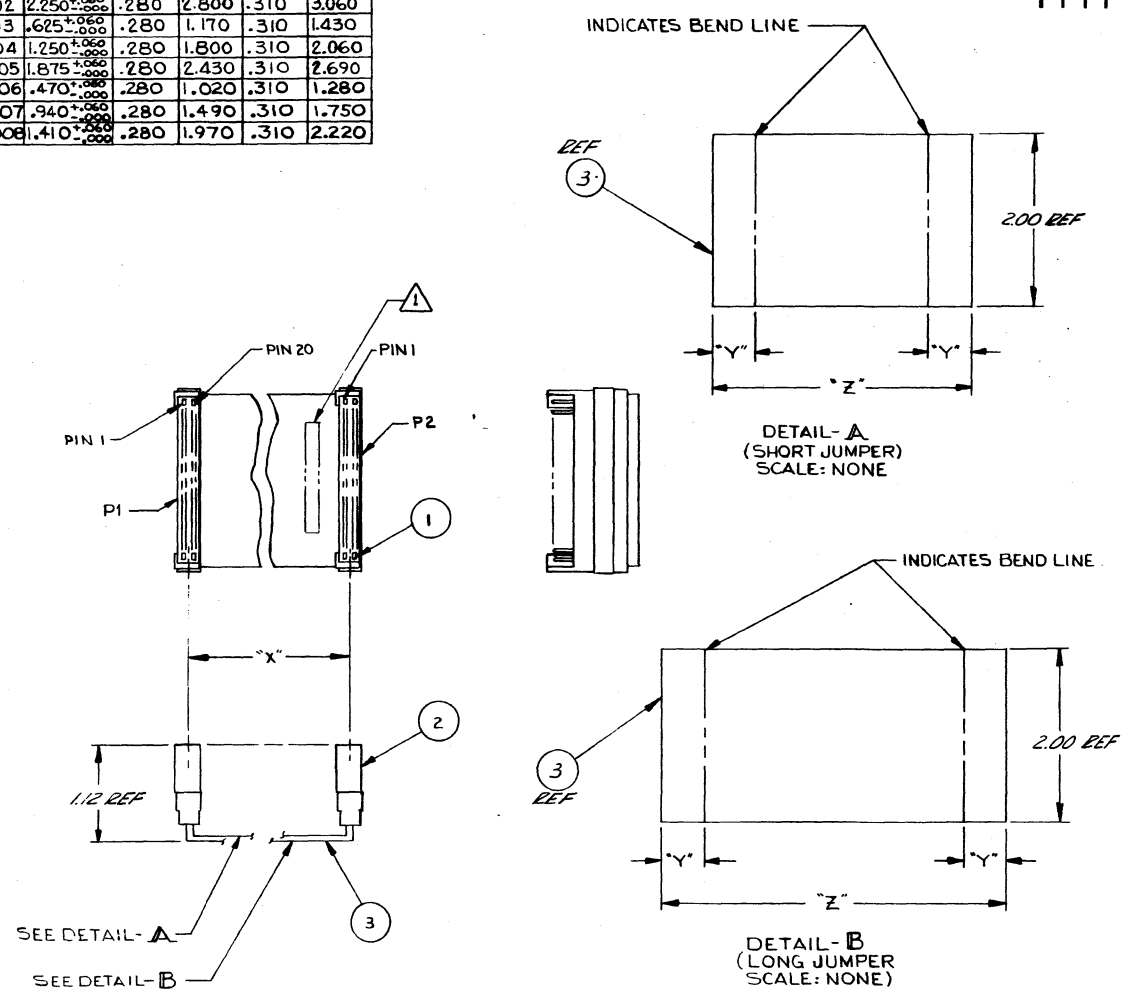

NOTES:

△1 MARK WITH CDC PART NUMBER AND REVISION PER CDC SPEC 10121508, .12 HIGH, BLACK.

2. PIN TO PIN WIRING: P1-20 TO P2-1 AND P1-38 TO P2-19, P1-1 TO P2-20 AND P1-19 TO P2-38.

APL61207008
APL61207007
APL61207006
APL61207005
APL61207004
APL61207003
APL61207002
APL61207001
APL61207000

DETACHED LISTS

UNLESS OTHERWISE SPECIFIED DIMENSIONS ARE IN INCHES TOLERANCES
3 PLACE ±.015 2 PLACE ± / ANGLES ± /

DO NOT SCALE DRAWING

MATERIAL

FINISH

CONTROL DATA

FIRST USED ON		
DWN	E SUND	10-30-70
CHKD	[illegible]	4/1/71
ENGR	[illegible]	4/3/71
MFG	[illegible]	4/7/71
APPR	[illegible]	7/19/71

TITLE

SIGNAL JUMPER CABLE ASSY.

CODE IDENT 15920 C DRAWING NO 61207000

SCALE 1/1 NHA SHEET OF

62048600

61207000

ASSEMBLY PARTS LIST

PRINT DATE	PAGE	FILE CHANGE NO.
10-03-73	1	00007095

DIV.	ASSEMBLY NUMBER	CD	REV.	DWG.	DESCRIPTION	MC	STATUS	STATUS DATE	ENG. RESP.	FILE DATE
0480	61207003	7	C	C	SIGNAL JUMPER CABLE ASSY	A	REL	07-16-71		04-16-73

T	FIND NO	LI	PART NUMBER	CD	M	QUANTITY	U/M	PART DESCRIPTION	MC	YLD	ECO. NO. IN	ECO. NO. OUT	S/N	WK IN	WK OUT
	001	01	51768700	0		76	PC	CONTACT PIN	P						
	002	01	51768802	4		2	PC	CONN. PLUG ELEC 38 PIN	P						
	003	01	95034101	6		220	FT	CABLE FLAT 19 CONDUCTOR	B						
								0003 TOTAL LINES							

ASSEMBLY PARTS LIST

PRINT DATE	PAGE	FILE CHANGE NO.
10-03-73	1	00007095

DIV.	ASSEMBLY NUMBER	CD	REV.	DWG.	DESCRIPTION	MC	STATUS	STATUS DATE	ENG. RESP.	FILE DATE
0480	61207004	5	C	C	SIGNAL JUMPER CABLE ASSY	A	REL	07-16-71		04-16-73

T	FIND NO	LI	PART NUMBER	CD	M	QUANTITY	U/M	PART DESCRIPTION	MC	YLD	ECO. NO. IN	ECO. NO. OUT	S/N	WK IN	WK OUT
	001	01	51768700	0		76	PC	CONTACT PIN	P						
	002	01	51768802	4		2	PC	CONN. PLUG ELEC 38 PIN	P						
	003	01	95034101	6		330	FT	CABLE FLAT 19 CONDUCTOR	B						
								0003 TOTAL LINES							

CONTROL DATA	A.C. POWER CABLE ASSEMBLY	CODE IDENT 15920	SHEET 2	A	DOCUMENT NO. 61207100	REV. C

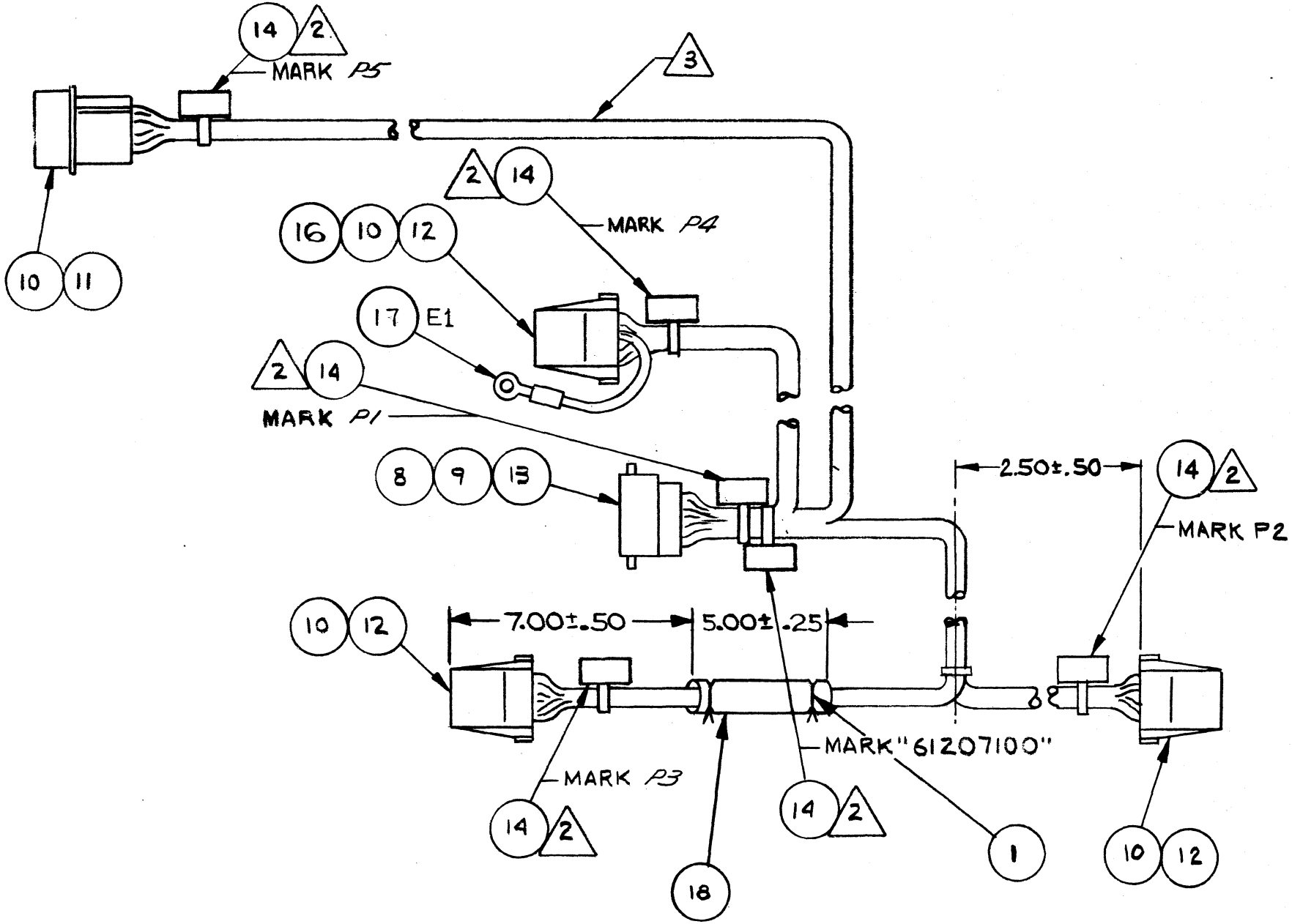

62048600

AA3185

PRINTED IN U.S.A.

ASSEMBLY NUMBER	REV	CLASS	DW SZ	ASSEMBLY DESCRIPTION	DESIGN SOURCE	FIRST USAGE	RELEASE DATE	CLASSIFICATION NUMBER
61207100	E	CLA	A	CABLE ASSY AC PWR	CD			

PR

PROCESSING DATE	PAGE NUMBER
7/09/73	1

CONTROL DATA

ASSEMBLY PARTS LIST

SPARE CODE
S = SPARE PARTS
N = NON SPARE PARTS

FIND NUMBER	DW SZ	PART NUMBER	QUANTITY	UNIT MEAS	PART DESCRIPTION	IN/OUT STATUS	CHANGE ORD NUMBER	DATE EFFECTIVE	CLASSIFICATION NUMBER	OP NUMBER	MAKE/BUY PART TYPE	PN NC	S OR N
001		65372400	6	PC	TY-RAPS SELF-LOCKING	IN				1	P11B		
001		65372400	6	PC	TY-RAPS SELF-LOCKING	OUT	000000	05 72		1	P11B		
001		94277400	11	PC	STRAP CABLE TIE	IN	000000	05 72		2	P11B		
001		94277400	11	PC	STRAP CABLE TIE	OUT	411	05 72		2	P11B		
001		94277400	13	PC	STRAP CABLE TIE	IN	411	05 72		2	P11B		
002		93463000	5	FT	WIRE 18 GA STRANDED BLACK PVC	IN				1	P11B		
003		93463111	2	FT	WIRE 18 GA STRANDED BROWN	IN				1	P11B		
004		93463333	2	FT	WIRE ELECT UL PVC INSU STRANDE	IN				1	P11B		
005		93463555	2	FT	WIRE 18 GA STRANDED GREEN	IN				1	P11A		
005		93463555	2	FT	WIRE 18 GA STRANDED GREEN	OUT	100	10 71		1	P11A		
005		93463555	5	FT	WIRE 18 GA STRANDED GREEN	IN	100	10 71		2	P11A		
006		93463888	2	FT	WIRE ELECT UL PVC INSU STRANDE	IN				1	P11B		
007		93463999	5	FT	WIRE 18 GA STRANDED WHITE	IN				1	P11B		
008		93942000	3	PC	CONTACTS AMP 60497-1	IN				1	P11A		
008		93942000	3	PC	CONTACTS AMP 60497-1	OUT	000100	10 71		1	P11A		
008		93942000	4	PC	CONTACTS AMP 60497-1	IN	000100	10 71		2	P11A		
009		93942001	12	PC	CONTACT PIN SERIES .090	IN				1	P11A		
009		93942001	12	PC	CONTACT PIN SERIES .090	OUT	000000	05 71		1	P11A		
009		62021400	12	PC	CONTACT PIN 18-22 GA	IN	000000	05 71		2	P11B		
009		62021400	12	PC	CONTACT PIN 18-22 GA	OUT	000100	11 71		2	P11B		
009		62021400	11	PC	CONTACT PIN 18-22 GA	IN	000100	11 71		3	P11B		
010		93943001	10	PC	CONTACT SOCKET	IN				1	P11C		
010		93943001	10	PC	CONTACT SOCKET	OUT	000000	05 71		1	P11C		
010		62021500	18	PC	CONTACT SOCKET 18-22 GA	IN	000000	05 71		2	P11B		

PROJECT ENGINEER

AA 2709 REV. 2-73

ASSEMBLY NUMBER	REV	CLASS	DW SZ	ASSEMBLY DESCRIPTION	DESIGN SOURCE	FIRST USAGE	RELEASE DATE	CLASSIFICATION NUMBER
61207100	E	CLA	A	CABLE ASSY AC PWR	CD			

PR

PROCESSING DATE	PAGE NUMBER
07/09/73	2

CONTROL DATA

ASSEMBLY PARTS LIST

SPARE CODE
S = SPARE PARTS
N = NON SPARE PARTS

FIND NUMBER	DW SZ	PART NUMBER	QUANTITY	UNIT MEAS	PART DESCRIPTION	IN/OUT STATUS	CHANGE ORD NUMBER	DATE EFFECTIVE	CLASSIFICATION NUMBER	OP NUMBER	MAKE/BUY PART TYPE	PN NC	S OR N
011		93947004	1	PC	CONNECTOR AMP 1-480303-0	IN				1	P11C		
011		93947004	1	PC	CONNECTOR AMP 1-480303-0	OUT	000100	09 71		1	P11C		
011		93947009	1	PC	CONNECTOR AMP-1-480426-0	IN	000100	09 71		2	P11C		
012		93947006	3	PC	CONNECTOR AMP 1-480270-0	IN				1	P11A		
013		93948006	1	PC	CONN PLUG 15 POS. AMP 1-480324	IN				1	P11C		
014		94277409	6	PC	STRAP CABLE TIE NYLN 1/16-5/8	IN				1	P11B		
015		93463222	3	FT	WIRE 18 GA STRANDED RED	IN				1	P11B		
016		93943000	1	PC	CONTACT SOCKET	IN	000108	10 71		1	P11A		
017		24524827	1	PC	LUG TERMINAL	IN	000108	10 71		1	P11B		
017		24524827	1	PC	LUG TERMINAL	OUT	000543	06 72		1	P11B		
017		515297 00	1	PC	REPLACED BY 51797219 5833	IN	000543	06 72		2	D296		
017		515297 00	1	PC	REPLACED BY 51797219 5833	OUT	000977	11 72		2	D296		
017		51797219		PC	TERM LUG	IN	000977	11 72		3	P11B		
018		95551 025		FT	SLEEVING INSULATION VINYL-BLAC	IN	000411	11 72		1	P11B		

PROJECT ENGINEER

AA 2709 REV. 2-73

CONTROL DATA	CRT Power Cable Assembly	CODE IDENT 15920	SHEET 2	A	DOCUMENT NO. 61212100	REV. B

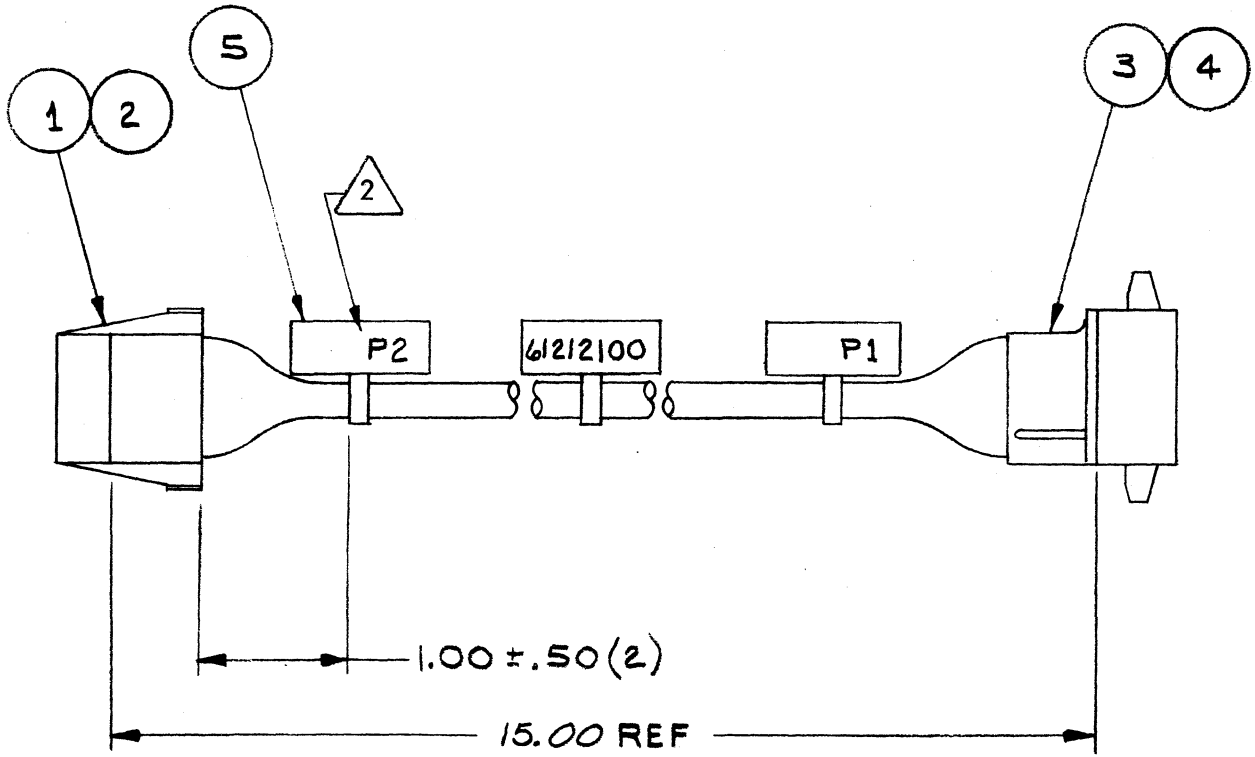

62048600

AA3185

PRINTED IN U.S.A.

ASSEMBLY PARTS LIST

PRINT DATE	PAGE	FILE CHANGE NO.
10-03-73	1	00072141

DIV.	ASSEMBLY NUMBER	CD	REV.	DWG.	DESCRIPTION	MC	STATUS	STATUS DATE	ENG. RESP.	FILE DATE
04E0	61212100	4	B	A	CRT POWER CABLE ASSEMBLY	A	REL	07-16-71		04-16-73

T	FIND NO	LI	PART NUMBER	CD	M	QUANTITY	U/M	PART DESCRIPTION	MC	YLD	ECO. NO. IN	ECO. NO. OUT	S/N	WK IN	WK OUT
	001	01	93947006	8		1	PC	CONNECTOR 6 SOCKET HOUSING	P						
	002	01	93943001	3		4	PC	CONTACT SOC 22-18 GA STRIP	P			00000000			7120
	002	02	62021500	4		4	PC	CONTACT SOCKET 18-22GA	P		00000000			7120	
	003	01	93946000	0		1	PC	CONNECTOR 6 PIN HOUSING	P						
	004	01	93942001	4		4	PC	CONTACT PIN 22-18 GA STRIP	P			00000000			7120
	004	02	62021400	7		4	PC	CONTACT PIN 18-22 GA	B		00000000			7120	
	005	01	94277409	2		3	PC	STRAP,CABLE TIE W.093 LG 4	P		00000101			7123	
	006	01	93463444	5		2 200	FT	WIRE 18 AWG YEL STRD UL 300V	B			00000101			7123
	006	02	93463444	5		2 800	FT	WIRE 18 AWG YEL STRD UL 300V	B		00000101	DT00311		7123	7142
	006	03	93463444	5		3 100	FT	WIRE 18 AWG YEL STRD UL 300V	B		DT00311			7142	
	007	01	93463555	8		1 100	FT	WIRE 18 AWG GRN STRD UL 300V	B			00000000			7120
	007	02	93463000	5		1 100	FT	WIRE 18 AWG BLK STRD UL 300V	B		00000000	DT00311		7120	7142
	007	03	93463000	5		1 250	FT	WIRE 18 AWG BLK STRD UL 300V	B		DT00311			7142	
	008	01	93463929	5		1 100	FT	WIRE 18 AWG WHT/RED UL 300V	B			DT00311			7142
	008	02	93463929	5		1 250	FT	WIRE 18 AWG WHT/RED UL 300V	B		DT00311			7142	

0015 TOTAL LINES

CONTROL DATA	D.C. Power Cable Assembly	CODE IDENT 15920	SHEET 2	A	DOCUMENT NO. 61207200	REV. C

TABULATION	
PART NO.	DIM "A"
61207200	10.00
61207201	16.00
61207202	20.00

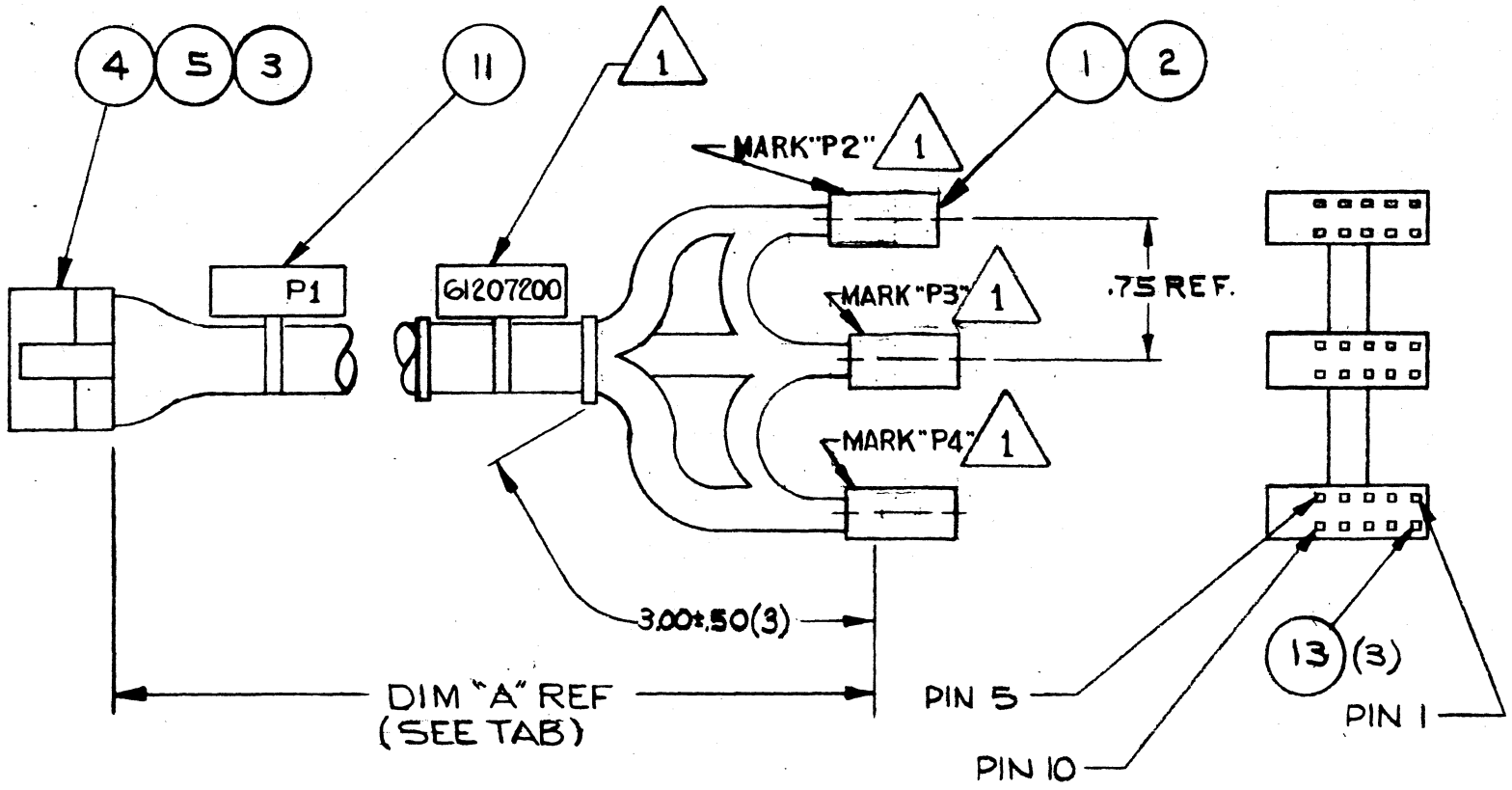

8-40

62048600

AA3185

PRINTED IN U.S.A.

ASSEMBLY PARTS LIST

PRINT DATE	PAGE	FILE CHANGE NO.
10-03-73	1	00000840

DIV.	ASSEMBLY NUMBER	CD	REV.	DWG.	DESCRIPTION	MC	STATUS	STATUS DATE	ENG. RESP.	FILE DATE
0480	61207200	9	C	A	D C POWER CABLE ASSEBMLY	A	REL	07-16-71		04-16-73

T	FIND NO	LI	PART NUMBER	CD	M	QUANTITY	U/M	PART DESCRIPTION	MC	YLD	ECO. NO. IN	ECO. NO. OUT	S/N	WK IN	WK OUT
	001	01	51782701	0		3	PC	CONNECTOR 66 SOCKET HOUSING	P			00000000			7120
	001	02	62020900	7		3	PC	CONNECTOR 10 SOCKET HOUSING	P		00000000			7120	
	002	01	51782800	0		60	PC	CONTACT SOCKET SF 22-24 GA	P			00000000			7120
	002	02	62021100	3		30	PC	CONTACT RECP. 22-18GA	P		00000000			7120	
	003	01	93942000	6		3	PC	CONTACT PIN TWO=18 GA STRIP	P						
	004	01	93942001	4		9	PC	CONTACT PIN 22-18 GA STRIP	P			00000000			7120
	004	02	62021400	7		9	PC	CONTACT PIN 18-22 GA	B		00000000			7120	
	005	01	93948002	6		1	PC	CONNECTOR 12 PIN HOUSING	P						
	006	01	93462000	6		4	500 FT	WIRE 20 AWG BLK STRD UL 300V	B			00000000			7121
	006	02	93462000	6		2	500 FT	WIRE 20 AWG BLK STRD UL 300V	B		00000000			7121	
	007	01	93462222	6		2	500 FT	WIRE 20 AWG RED STRD UL 300V	B						
	008	01	93462333	1		2	500 FT	WIRE 20 AWG ORN STRD UL 300V	B						
	009	01	93462666	4		2	500 FT	WIRE 20 AWG BLU STRD UL 300V	B						
	010	01	93462777	9		2	500 FT	WIRE 20 AWG VIO STRD UL 300V	B						
	011	01	94277409	2		5	PC	STRAP,CABLE TIE W.093 LG 4	P			00000102			7123
	011	02	94277409	2		2	PC	STRAP,CABLE TIE W.093 LG 4	P		00000102			7123	
	012	01	94277400	1		3	PC	CABLE TIE STRAP 1/16-5/8 DIA.	P		00000000	00000102		7120	7123
	012	02	94277400	1		2	PC	CABLE TIE STRAP 1/16-5/8 DIA.	P		00000102			7123	
	013	01	62021200	1		1	PC	KEYING PLUG	P		00000000	00000000		7120	7121
	013	02	62021200	1		3	PC	KEYING PLUG	P		00000000			7121	
	014	01	24548301	1		750	FT	WIRE 24 AWG BLK STRD UL 300V	B		00000000			7121	
								0021 TOTAL LINES							

ASSEMBLY PARTS LIST

PRINT DATE	PAGE	FILE CHANGE NO.
10-03-73	1	00000163

DIV.	ASSEMBLY NUMBER	CD	REV.	DWG.	DESCRIPTION	MC	STATUS	STATUS DATE	ENG. RESP.	FILE DATE
0480	62024500	1	B		CABLE SET 713 LCDH	N	REL	07-16-71		04-16-73

T	FIND NO	LI	PART NUMBER	CD	M	QUANTITY	U/M	PART DESCRIPTION	MC	VLD	ECO. NO. IN	ECO. NO. OUT	S/N	WK IN	WK OUT
	001	01	61212100	4		1	PC	CRT POWER CABLE ASSEMBLY	A						
	002	01	62020200	2		1	PC	COAX CABLE ASSEMBLY	A						
	003	01	61207200	9		2	PC	D C POWER CABLE ASSEBMLY	A						
	004	01	61207000	3		3	PC	SIGNAL JUMPER CABLE ASSY	A			00000000			7118
	005	01	61207003	7		3	PC	SIGNAL JUMPER CABLE ASSY	A		00000000	DT00163		7118	7137
								0005 TOTAL LINES							

CONTROL DATA	Data Set Cable Assy (External)	CODE IDENT 15920	SHEET 3	A	DOCUMENT NO. 62032100	REV. G

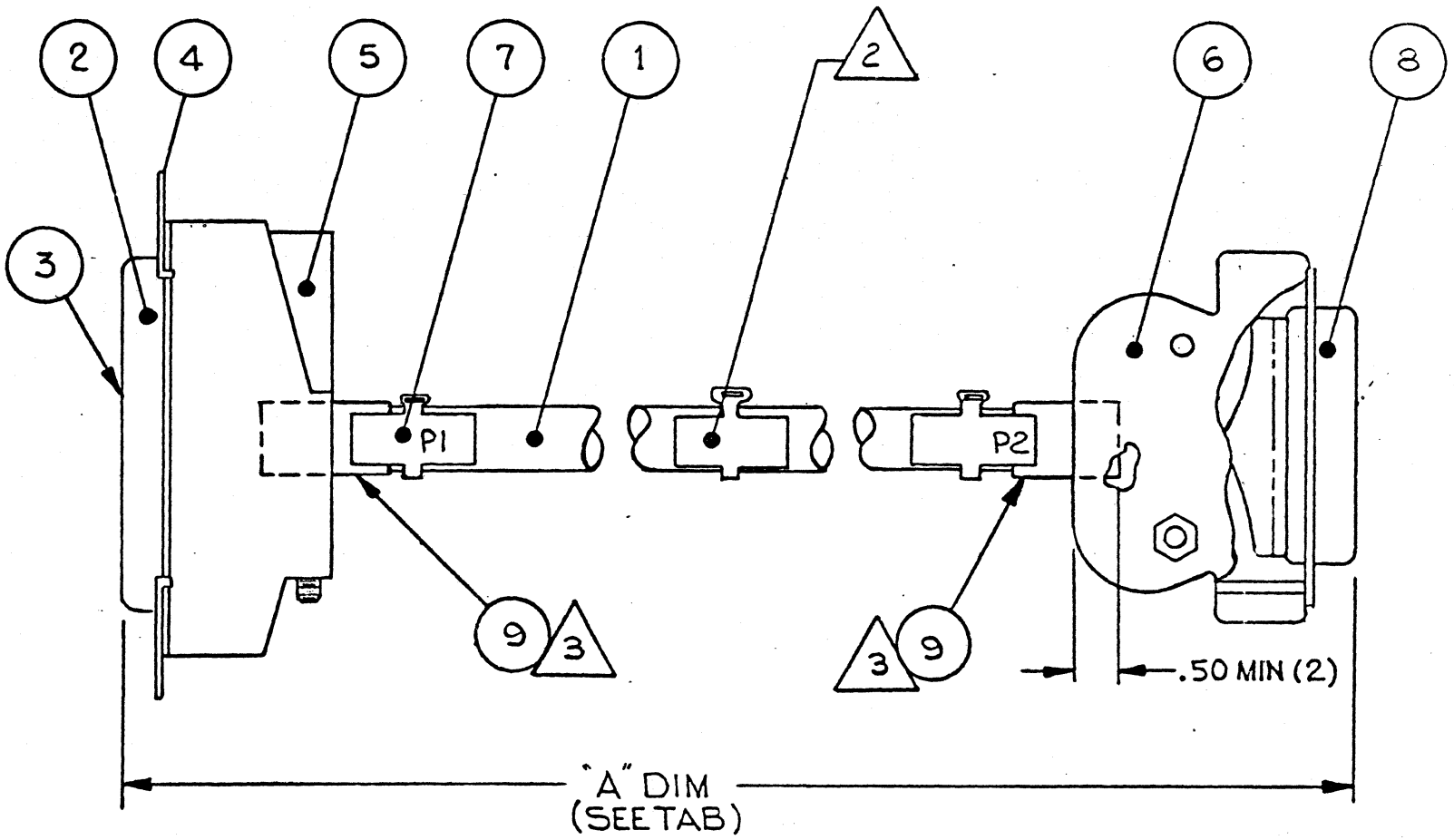

62032100	H	CLA	A	DATA SET CABLE EXTERNAL ASSY	CD				PR	06/23/73	1
ASSEMBLY NUMBER	REV	CLASS	DW SZ	ASSEMBLY DESCRIPTION	DESIGN SOURCE	FIRST USAGE	RELEASE DATE	CLASSIFICATION NUMBER		PROCESSING DATE	PAGE NUMBER

CONTROL DATA

ASSEMBLY PARTS LIST

SPARE CODE
S = SPARE PARTS
N = NON SPARE PARTS

FIND NUMBER	DW SZ	PART NUMBER	QUANTITY		UNIT MEAS.	PART DESCRIPTION	IN/OUT STATUS	CHANGE ORD. NUMBER	DATE EFFECTIVE	CLASSIFICATION NUMBER	OP NUMBER	MAKE/BUY PART TYPE	PN NC	S OR N
001		24546700	10	00	FT	CABLE 24 COND 24AWG U/L	(IN)				1	P11A		
001		24546700	10	00	FT	CABLE 24 COND 24AWG U/L	OUT	000000	102571		1	P11A		
001		24546700	5	60	FT	CABLE 24 COND 24AWG U/L	IN	000000	102571		2	P11A		
002		62013702	2	00	PC	CONN. 25 POS.	(IN)				1	P11A		
002		62013702	2	00	PC	CONN. 25 POS.	OUT	007461	012973		1	P11A		
002		62013702	1	00	PC	CONN. 25 POS.	IN	007461	012973		2	P11A		
003		62013802	50	00	PC	CONNECTOR SOCKET	(IN)				1	P11A		
003		62013802	50	00	PC	CONNECTOR SOCKET	OUT	000000	052471		1	P11A		
003		62013802	48	00	PC	CONNECTOR SOCKET	(IN)	000000	052471		2	P11A		
003		62013802	48	00	PC	CONNECTOR SOCKET	OUT	007461	012973		2	P11A		
003		62013802	24	00	PC	CONNECTOR SOCKET	IN	007461	012973		3	P11A		
004		51668400	1	00	PC	CONN PLUG ELEC CRIMP TYPE	(IN)				1	P11A		
004		51668400	1	00	PC	CONN PLUG ELEC CRIMP TYPE	OUT	000190	102571		1	P11A		
004		51584400	1	00	PC	LATCH SPRING LKG ASSY	(IN)	000190	102571		2	P11A		
004		51584400	1	00	PC	LATCH SPRING LKG ASSY	OUT	000522	032772		2	P11A		
004		51853900	2	00	PC	CONTACT SOCKET	IN	000522	032772		3	P11B		
005		51784302	1	00	PC	STRAIN RELIEF	IN				1	P11A		
006		51522200	1	00	PC	REPLACED BY 36092400 5404	(IN)				1	D296		
006		51522200	1	00	PC	REPLACED BY 36092400 5404	OUT	005404	020772		1	D296		
006		36092400	1	00	PC	HOOD CONN PLASTIC	IN	005404	020772		2	P11A		
007		94277407	3	00	PC	STRAP CABLE TIE NYLN 1/8- 3/4	IN				1	P11B		
008		24559310		50	FT	INSULATION SLEEVE .500 SHRINK	(IN)	000190			1	P11A		
008		24559310		50	FT	INSULATION SLEEVE .500 SHRINK	OUT	007461	012973		1	P11A		
008		51668401	1	00	PC	CONNECTOR, PLUG ELEC. CRIMP 25	IN	007461	012973		2	P11A		
009		24559310		50	FT	INSULATION SLEEVE .500 SHRINK	IN	007672	012973			P11A		

PROJECT ENGINEER

AA 2780 REV. 2-73

CONTROL DATA	Interconnect Cable Assembly	CODE IDENT 15920	SHEET 2	A	DOCUMENT NO. 62137300	REV. A

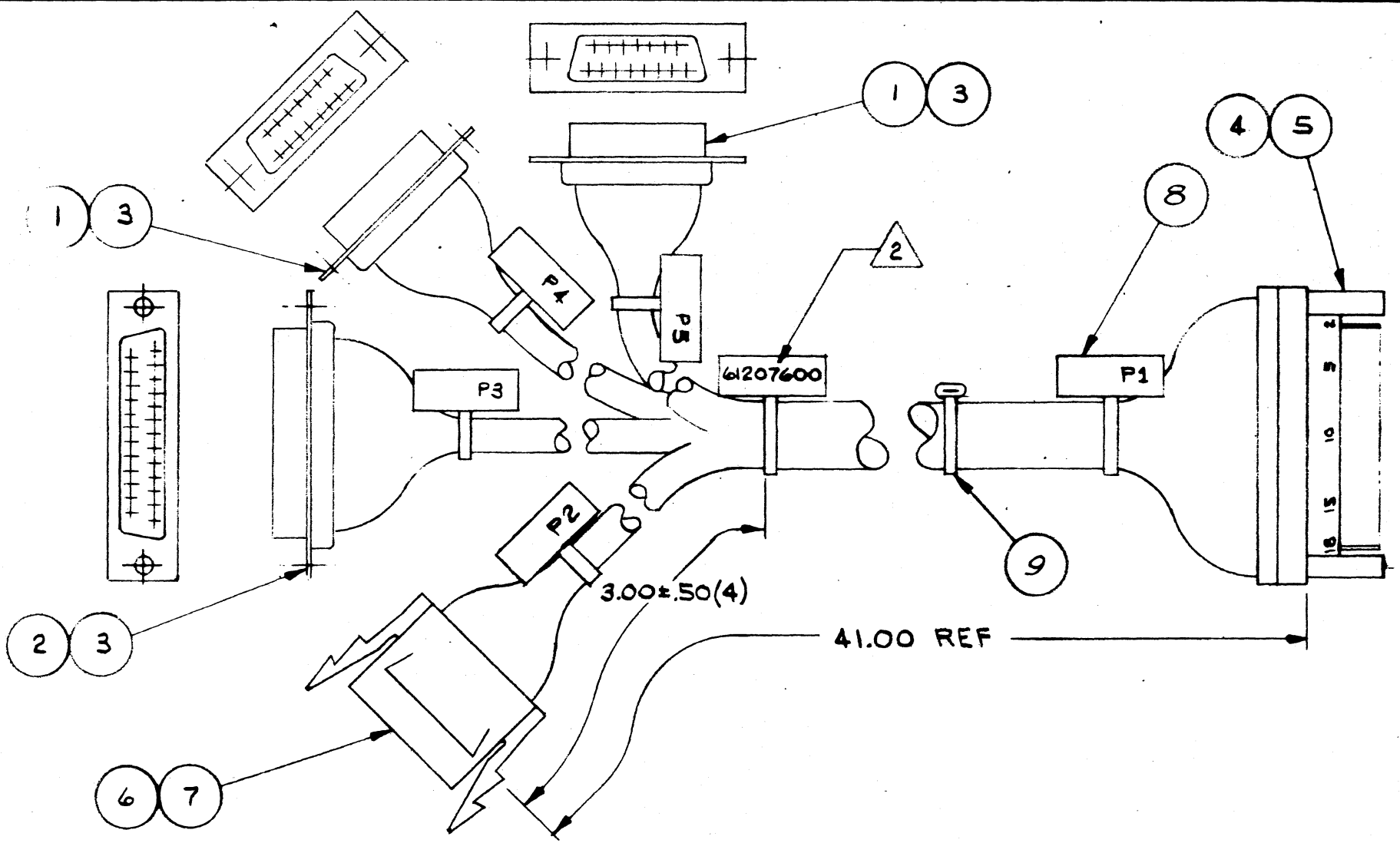

A3185
PRINTED IN U.S.A.

ASSEMBLY PARTS LIST

PRINT DATE	PAGE	FILE CHANGE NO.
10-03-73	1	00001677

DIV.	ASSEMBLY NUMBER	CD	REV.	DWG.	DESCRIPTION	MC	STATUS	STATUS DATE	ENG. RESP.	FILE DATE
0480	62137300	0	D		INTER CONNEC CABLE ASSY	N	REL	11-18-71		08-23-73

T	FIND NO	LI	PART NUMBER	CD	M	QUANTITY	U/M	PART DESCRIPTION	MC	YLD	ECO. NO. IN	ECO. NO. OUT	S/N	WK IN	WK OUT
	001	01	62013501	2		2	PC	CONNECTOR 15 SOCKET HOUSING	P						
	002	01	62013502	0		1	PC	CONNECTOR 25 SOCKET HOUSING	P						
	003	01	62013601	0		28	PC	CONTACT SOCKET SF 24-20 GA	P			00000000			7119
	003	02	62013602	8		28	PC	CONTACT-SOCKET, 24-28GA	P		00000000	DT00735		7119	7229
	003	03	62013602	8		29	PC	CONTACT-SOCKET, 24-28GA	P		DT00735			7229	
	004	01	51768802	4		1	PC	CONN. PLUG ELEC 38 PIN	P						
	005	01	51769200	0		38	PC	CONTACT PIN 22-24 GA	P						
	006	01	93947001	9		1	PC	CONNECTOR RECP ELEC 9 SOC CON	P						
	007	01	93943008	8		9	PC	CONTACT SOC 30-22 GA STRIP	B			00000000			7119
	007	02	62021500	4		9	PC	CONTACT SOCKET 18-22GA	P		00000000	DT01677		7119	7334
	007	03	93943008	8		9	PC	CONTACT SOC 30-22 GA STRIP	B		DT01677			7334	
	008	01	94277409	2		6	PC	STRAP,CABLE TIE W.093 LG 4	P						
	009	01	65372400	5		6	PC	TY-RAPS,SELF-LOCKING	P			00000000			7119
	009	02	94277400	1		6	PC	CABLE TIE STRAP 1/16-5/8 DIA.	P		00000000	DT00280		7119	7202
	009	03	94277400	1		14	PC	CABLE TIE STRAP 1/16-5/8 DIA.	P		DT00280	DT01677		7202	7334
	009	04	94277400	1		10	PC	CABLE TIE STRAP 1/16-5/8 DIA.	P		DT01677			7334	
	010	01	24548301	1		14	FT	WIRE 24 AWG BLK STRD UL 300V	B						
	011	01	24548310	2		38	FT	WIRE 24 AWG WHT STRD UL 300V	B						
	012	01	17605936	8		3 420	FT	WIRE 24 GA TW PR BRN/WHT	B						
	013	01	17605938	4		3 420	FT	WIRE 24 GA TW PR BRN/WHT	B						
	014	01	17605939	2		3 420	FT	WIRE 24 GA TW PR YEL/WHT	B						
	015	01	17605940	0		3 420	FT	WIRE 24 GA TW PR GRN/WHT	B						
	016	01	17605941	8		3 420	FT	WIRE 24 GA TW PR BLU/WHT	B						
	017	01	17605942	6		3 420	FT	WIRE 24 GA TW PR VIOL/WHT	B						

ASSEMBLY PARTS LIST

PRINT DATE	PAGE	FILE CHANGE NO.
10-03-73	2	00001677

DIV.	ASSEMBLY NUMBER	CD	REV.	DWG.	DESCRIPTION	MC	STATUS	STATUS DATE	ENG. RESP.	FILE DATE
0480	62137300	0	D		INTER CONNEC CABLE ASSY	N	REL	11-18-71		08-23-73

T	FIND NO	LI	PART NUMBER	CD	M	QUANTITY	U/M	PART DESCRIPTION	MC	YLD	ECO. NO. IN	ECO. NO. OUT	S/N	WK IN	WK OUT
	018	01	17605943	4		3 420	FT	WIRE 24 GA TW PR GRAY/WHT	B						
	019	01	17605909	5		3 420	FT	WIRE 24 GA TW PR BRN/WHT-BLK	B						
	020	01	17605919	4		3 420	FT	WIRE 24GA TW PR ORN/WHT-BLK	B						
	021	01	17605924	4		3 420	FT	WIRE 24 GA TW PR YEL/WHT-BLK	B						
								0028 TOTAL LINES							

CONTROL DATA	A.C. POWER JUMPER CABLE	CODE IDENT 15920	SHEET 2	A	DOCUMENT NO. 62154400	REV. A

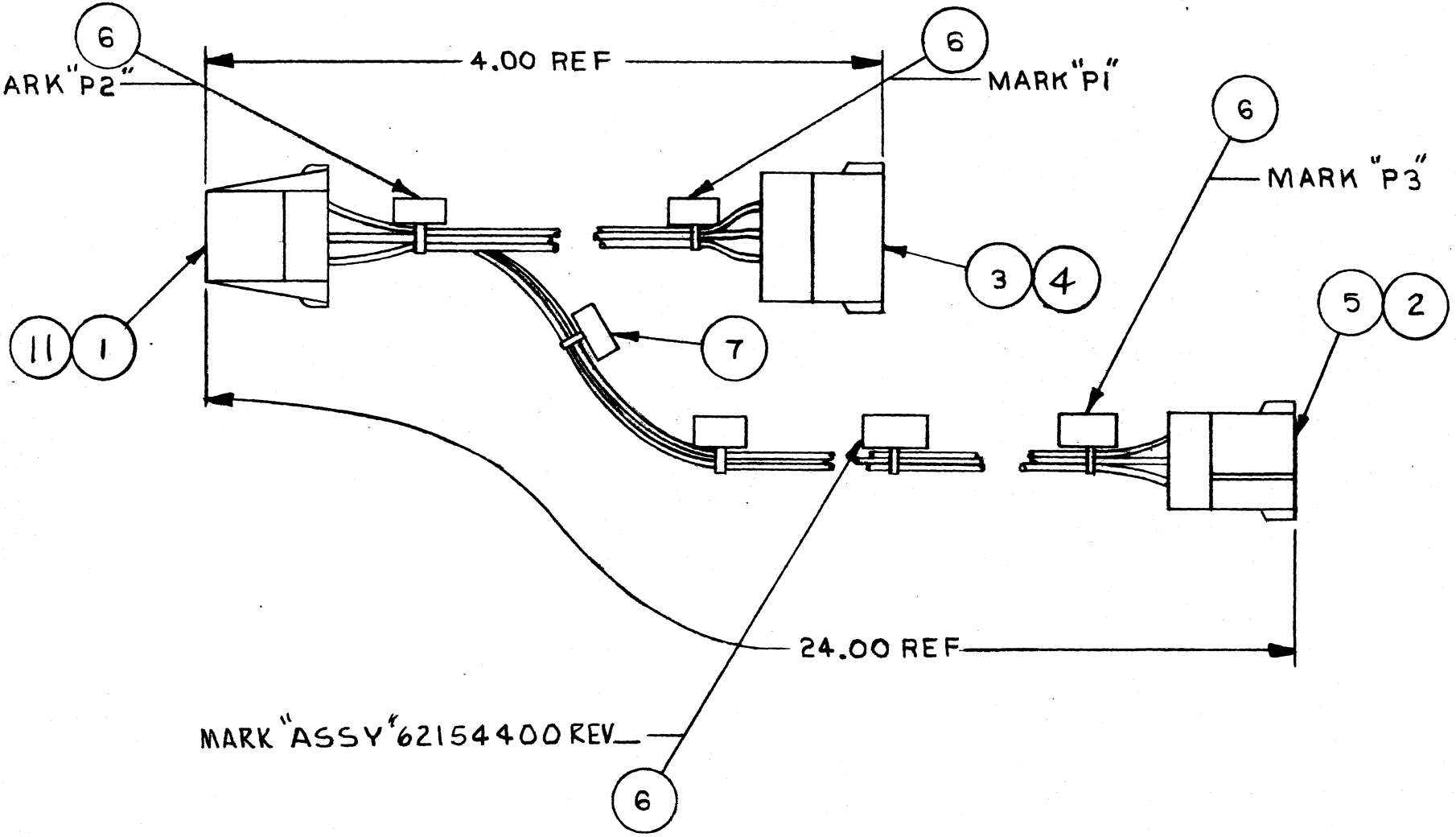

ASSEMBLY PARTS LIST

PRINT DATE	PAGE	FILE CHANGE NO.
10-03-73	1	00001640

DIV.	ASSEMBLY NUMBER	CD	REV.	DWG.	DESCRIPTION	MC	STATUS	STATUS DATE	ENG. RESP.	FILE DATE
0400	62154400	6	C		AC POWER CABLE ASSY	A	REL	03-01-72		08-21-73

T	FIND NO	LI	PART NUMBER	CD	M	QUANTITY		U/M	PART DESCRIPTION	MC	YLD	ECO. NO. IN	ECO. NO. OUT	S/N	WK IN	WK OUT
	001	01	93947006	8		1		PC	CONNECTOR 6 SOCKET HOUSING	P						
	002	01	62021500	4		9		PC	CONTACT SOCKET 18-22GA	P			DT005738			7231
	002	02	62021500	4		3		PC	CONTACT SOCKET 18-22GA	P		WT005738			7231	
	003	01	93948005	9		1		PC	CONNECTOR 6 PIN HOUSING	P						
	004	01	62021400	7		3		PC	CONTACT PIN 18-22 GA	B						
	005	01	93947004	3		1		PC	CONNECTOR 3 SOCKET HOUSING	P						
	006	01	94277409	2		4		PC	STRAP,CABLE TIE W.093 L8 4	P						
	007	01	94277400	1		6		PC	CABLE TIE STRAP 1/16-5/8 DIA.	P						
	008	01	93403999	8		2	300	FT	WIRE 18 AWG WHT STRD UL 300V	B						
	009	01	93403222	5		2	300	FT	WIRE 18 AWG RED STRD UL 300V	B						
	010	01	93403555	8		2	300	FT	WIRE 18 AWG GRN STRD UL 300V	B						
	011	01	93943000	5		6		PC	CONTACT SOC TWO=18 GA STRIP	B		WT005738			7231	
									0012 TOTAL LINES							

SECTION 9

SPARE PARTS DATA

This data will be supplied when it becomes available.

COMMENT SHEET

MANUAL TITLE 92413-10 Conversational Display Terminal
On-Site Customer Engineering Manual

PUBLICATION NO. 62048600 REVISION 02-0

FROM: NAME: _____

BUSINESS ADDRESS: _____

COMMENTS:

This form is not intended to be used as an order blank. Your evaluation of this manual will be welcomed by Control Data Corporation. Any errors, suggested additions or deletions, or general comments may be made below. Please include page number references and fill in publication revision level as shown by the last entry on the Record of Revision page at the front of the manual. Customer engineers are urged to use the TAR.

CUT ALONG LINE

AA3419 REV. 11/69 PRINTED IN U.S.A.

NO POSTAGE STAMP NECESSARY IF MAILED IN U. S. A.

FOLD ON DOTTED LINES AND STAPLE

STAPLE

STAPLE

FOLD

FOLD

FIRST CLASS
PERMIT NO. 8241

MINNEAPOLIS, MINN.

BUSINESS REPLY MAIL
NO POSTAGE STAMP NECESSARY IF MAILED IN U.S.A.

POSTAGE WILL BE PAID BY

CONTROL DATA CORPORATION
Technical Publications Department
2401 North Fairview Avenue
St. Paul, Minnesota 55113

CUT ALONG LINE

FOLD

FOLD

CONTROL DATA

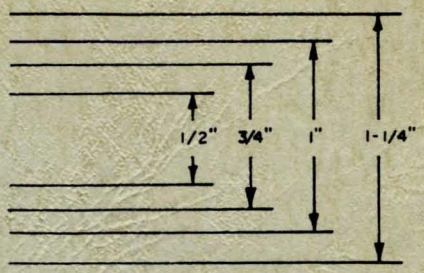

CUT OUT FOR USE AS LOOSE-LEAF BINDER TITLE TAB

CONTROL DATA
CORPORATION

CORPORATE HEADQUARTERS, 8100 34th AVE. SO., MINNEAPOLIS, MINN. 55440
SALES OFFICES AND SERVICE CENTERS IN MAJOR CITIES THROUGHOUT THE WORLD

PRINTED IN U.S.A.